The English version is binding

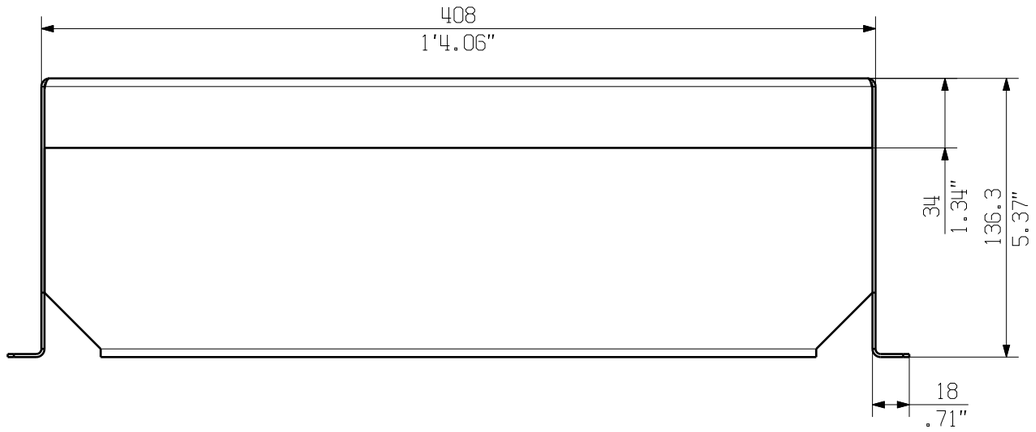

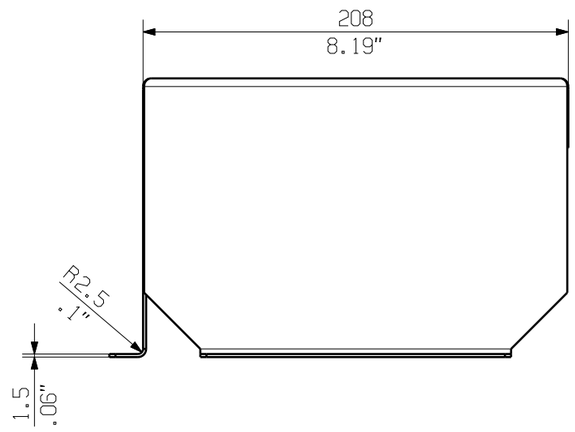

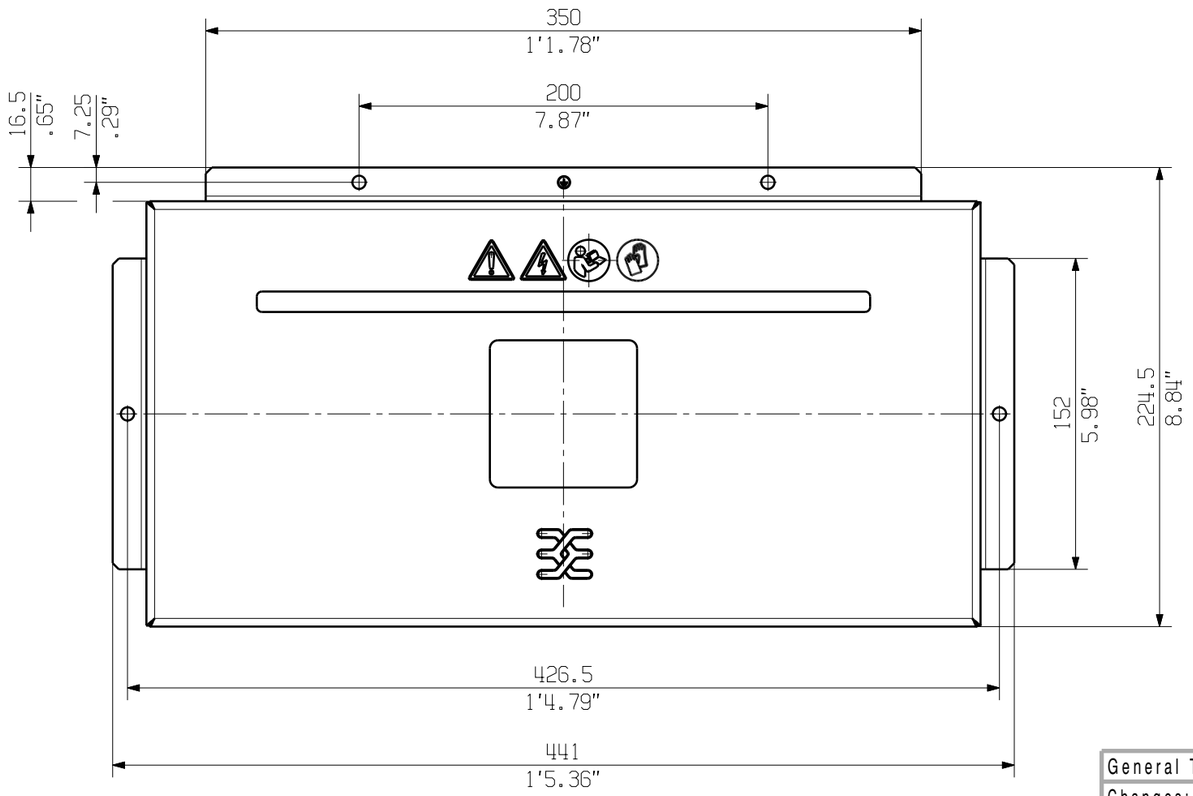

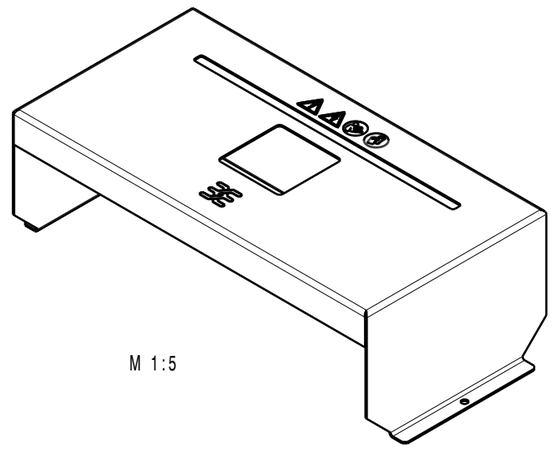

M 1:5

General Tolerances: ISO 2768:1989-m		.	Tolerances ISO 8015
Changes: EC00012721	00	Weidmüller	82876 (Drawing no.) 1 (Index)
Mat. No. (SAP) 8000143248			Scale: 1:3 Sheet 2 / 2
Drawings Single Part			PV SUNCOVER 204013 SW
Drawn	Klarhorst, Nane		SUNCOVER COMBINERBOX
Responsible	Wohlgemuth, Klaus		SUNCOVER COMBINERBOX
Approved	Püschner, Klaus	16.04.2025	

The reproduction, distribution and utilization of this document as well as the communication of its contents to others without explicit authorization is prohibited.
Offenders will be held liable for the payment of damages. Weidmueller exclusively reserves the right to file for patents, utility models or designs.
© Weidmueller Interface GmbH & Co. KG