Remote-I/O-System u-remote
Manual (Original)





Weidmüller

Manufacturer
Weidmüller Interface GmbH & Co. KG
Klingenbergstraße 26
32758 Detmold, Germany
T +49 5231 14-0
F +49 5231 14-292083
www.weidmueller.com

UK importer
Weidmüller Ltd.
Centurion Court Office Park
Meridian East, Leicester, LE19 1TP
T +44 1162 823470
F +44 1162 893582
www.weidmueller.com

Document No. 1432790000
Revision 33/11.2026

Content

1 About the documentation 5
1.1 Graduated warnings 5
1.2 Design elements 5
1.3 Symbols used 5
1.4 Related documentation 5
1.5 Standard data structure 6
1.6 Software releases described 6

2 Safety 8
2.1 General safety notice 8
2.2 Intended use 9
2.3 Use in a potentially explosive atmosphere 9
2.4 Legal notice 10

3 System overview 11
3.1 General description of the fieldbus coupler 13
3.2 General technical data for the fieldbus coupler 16
3.3 General description of I/O modules 17
3.4 General technical data for I/O modules 20
3.5 Current-voltage characteristic 21
3.6 Mechanical fixing elements 21
3.7 Type plate 22
3.8 Markers 23
3.9 Module codings 24

4 Configuration 26
4.1 Order and arrangement of the modules 26
4.2 Orientation of the station 26
4.3 Installation distances 27
4.4 Use in a potentially explosive atmosphere 28
4.5 Use in maritime and offshore applications 28
4.6 PUSH IN system cabling 29
4.7 Current demand and power supply 29
4.8 Example calculation for the power supply 33
4.9 Calculation of power loss 34
4.10 Feedback energy in DO modules 35
4.11 Frequency suppression filter in AI modules 35

5 Detailed descriptions of the fieldbus couplers 36
5.1 PROFIBUS fieldbus coupler 36
5.2 PROFINET fieldbus coupler 44
5.3 EtherCAT fieldbus coupler 55
5.4 Modbus TCP fieldbus coupler 64
5.5 EtherNet/IP fieldbus coupler 83
5.6 EtherNet/IP fieldbus coupler V2 103
5.7 DeviceNet fieldbus coupler 129
5.8 CANopen fieldbus coupler 143
5.9 POWERLINK fieldbus coupler 150
5.10 Fieldbus coupler IEC 61162-450 168
5.11 CC-Link fieldbus coupler 182
5.12 CC-Link IE TSN fieldbus coupler 201
5.13 PROFINET fieldbus coupler ECO 218
5.14 EtherCAT fieldbus coupler ECO 226
5.15 Modbus TCP fieldbus coupler ECO 236
5.16 EtherNet/IP fieldbus coupler ECO 254
5.17 PROFINET fieldbus coupler UR20-FBC-PN-SL-4DIO 275

6 Detailed descriptions of I/O modules 284
6.1 Digital input module UR20-4DI-P 284
6.2 Digital input module UR20-4DI-P-3W 288
6.3 Digital input module UR20-8DI-P-2W 292
6.4 Digital input module UR20-8DI-P-3W 296
6.5 Digital input module UR20-8DI-P-3W-HD 300
6.6 Digital input module UR20-16DI-P 304
6.7 Digital input module UR20-16DI-P-PLC-INT 308
6.8 Digital input module with time stamp UR20-2DI-P-TS 312
6.9 Digital input module with time stamp UR20-4DI-P-TS 320
6.10 Digital input module UR20-4DI-N 328
6.11 Digital input module UR20-8DI-N-3W 332
6.12 Digital input module UR20-16DI-N 336
6.13 Digital input module UR20-16DI-N-PLC-INT 340
6.14 Digital input module UR20-4DI-2W-230V-AC 344
6.15 Digital input module UR20-8DI-ISO-2W 348
6.16 Digital output module UR20-4DO-P 352
6.17 Digital output module UR20-4DO-P-2A 356
6.18 Digital output module UR20-4DO-PN-2A 360
6.19 Digital output module UR20-8DO-P 364
6.20 Digital output module UR20-8DO-P-2W-HD 368
6.21 Digital output module UR20-16DO-P 372
6.22 Digital output module UR20-16DO-P-PLC-INT 376
6.23 Digital output module UR20-4DO-N 380
6.24 Digital output module UR20-4DO-N-2A 384
6.25 Digital output module UR20-8DO-N 388
6.26 Digital output module UR20-16DO-N 392
6.27 Digital output module UR20-16DO-N-PLC-INT 396
6.28 Digital output module UR20-4DO-ISO-4A 400
6.29 Universal digital input and output module UR20-8DIO-P-3W-DIAG 404
6.30 Digital output module UR20-4RO-SSR-255 409
6.31 Digital relay output module UR20-4RO-CO-255 413
6.32 Digital pulse width modulation output module UR20-2PWM-PN-0.5A 417
6.33 Digital pulse width modulation output module UR20-2PWM-PN-0.5A-V2 422
6.34 Digital pulse width modulation output module UR20-2PWM-PN-2A 427
6.35 Digital pulse width modulation output module UR20-2PWM-PN-2A-V2 432
6.36 Current controlled PWM module UR20-2PWM-I-2.5A-2DI-P 437
6.37 Stepper motor module UR20-1SM-50W-6DI2DO-P 448
6.38 Analogue input module UR20-2AI-UI-16 458
6.39 Analogue input module UR20-2AI-UI-16-DIAG 465
6.40 Analogue input module UR20-4AI-UI-16 472
6.41 Analogue input module UR20-4AI-UI-16-DIAG 479
6.42 Analogue input module UR20-4AI-UI-DIF-16-DIAG 487
6.43 Analogue input module UR20-4AI-UI-DIF-32-DIAG 494
6.44 Analogue input module UR20-4AI-UI-ISO-16-DIAG 499
6.45 Analogue input module UR20-4AI-UI-16-HD 507
6.46 Analogue input module UR20-4AI-UI-16-DIAG-HD 514
6.47 Analogue input module UR20-4AI-UI-12 522
6.48 Analogue input module UR20-8AI-I-16-DIAG 529
6.49 Analogue input module UR20-8AI-I-16-HD 535
6.50 Analogue input module UR20-8AI-I-16-DIAG-HD 540

6.51 Analogue input module UR20-8AI-I-PLC-INT 546
6.52 Analogue input module UR20-4AI-RTD-DIAG 551
6.53 Analogue input module UR20-4AI-RTD-HP-DIAG 559
6.54 Analogue input module UR20-4AI-TC-DIAG 568
6.55 Analogue input module UR20-4AI-TC-CJT-DIAG 576
6.56 Analogue input module UR20-4AI-R-HS-16-DIAG 584
6.57 Analogue input module UR20-4AI-I-HART-16-DIAG 591
6.58 Analogue input module UR20-4AI-I-HART-ISO-16 604
6.59 Analogue input module UR20-8AI-RTD-DIAG-2W 617
6.60 Analogue input module UR20-15AI-U-16-DIAG 625
6.61 Strain gauge module UR20-2AI-SG-24-DIAG 636
6.62 Power measurement module UR20-3EM-230V-AC 645
6.63 Power measurement module UR20-3EM-400V-AC-CT1A, UR20-3EM-400V-AC-CT5A 657
6.64 Power measurement module UR20-3EM-400V-AC-RC 676
6.65 Power measurement module UR20-3EM-400V-AC-333mV 692
6.66 Analogue output module UR20-2AO-UI-16 708
6.67 Analogue output module UR20-2AO-UI-16-DIAG 715
6.68 Analogue output module UR20-2AO-UI-ISO-16-DIAG 723
6.69 Analogue output module UR20-4AO-UI-16 732
6.70 Analogue output module UR20-4AO-UI-16-M 739
6.71 Analogue output module UR20-4AO-UI-16-DIAG 746
6.72 Analogue output module UR20-4AO-UI-16-M-DIAG 754
6.73 Analogue output module UR20-4AO-UI-16-HD 762
6.74 Analogue output module UR20-4AO-UI-16-DIAG-HD 769
6.75 Digital counter module UR20-1CNT-100-1DO 777
6.76 Digital counter module UR20-2CNT-100 792
6.77 Digital counter module UR20-1CNT-500 806
6.78 Digital frequency counter module UR20-2FCNT-100 818
6.79 Digital interface module UR20-1SSI 825
6.80 Serial communication module UR20-1COM-232-485-422 829
6.81 Serial communication module UR20-1COM-232-485-422-V2 839
6.82 Communication module UR20-1COM-SAI-PRO 857
6.83 Communication module UR20-1COM-SAI-PRO-V2 861
6.84 Communication module UR20-1COM-CANOPEN 865
6.85 Communication module UR20-1COM-CAN 876
6.86 Communication module UR20-4COM-IO-LINK 886
6.87 Communication module UR20-4COM-IO-LINK-V2 892
6.88 Safe I/O modules 898
6.89 Safe feed-in modules UR20-PF-O-xDI-SIL 899
6.90 Power-feed module for input current path UR20-PF-I 900
6.91 Power-feed module for output current path UR20-PF-O 903
6.92 Potential distribution module for input current path UR20-16AUX-I 906
6.93 Potential distribution module for output current path UR20-16AUX-O 908
6.94 Potential distribution module for functional earth UR20-16AUX-FE 910
6.95 0-V potential distribution module for the input current path UR20-16AUX-GND-I 912
6.96 0-V potential distribution module for the output current path UR20-16AUX-GND-O 914
6.97 Auxiliary module UR20-AUX-VSYS 916
6.98 Empty slot module UR20-ES 918
6.99 Termination kit, end bracket for vertical installation 919

7 Installation 920
7.1 Preparations for assembly 920
7.2 Assembling the u-remote station 923
7.3 Attaching the marker 925
7.4 Coding the module 926
7.5 Wiring 927
7.6 Insulation test 928

8 Earthing and shielding 929
8.1 Earthing of shielded cables 930
8.2 Potential ratios 934
8.3 Electromagnetic compatibility (EMC) 936
8.4 Shielding of cables 938

9 Commissioning 940
9.1 Requirements 940
9.2 Device description files 940
9.3 Commissioning a PROFINET fieldbus coupler 941

10 Replacing components 947
10.1 Removing/replacing the plug-in unit 947
10.2 Replacing the electronic unit/hot swap 948
10.3 Replacing an I/O module 951
10.4 Removing/replacing connectors 952
10.5 Removing/replacing cables 953

11 Disassembly and disposal 955
11.1 Disassembling the u-remote station 955
11.2 Disposing of the u-remote station 955

12 LED indicators and troubleshooting 956
12.1 Fieldbus coupler 956
12.2 I/O modules 973

13 Accessories and replacement parts 984
13.1 Accessories 984
13.2 Replacement parts 985

Attachment A-1
Overview of module IDs A-2
Decimal ↔ hexadecimal conversion table A-4
Automatic I/O mapping with different engineering tools A-5
Examples of module position coding A-6
Breakdown of Serial Numbers A-8
Service information A-9

1 About the documentation

The documentation is part of the product. The documentation is intended for the operator of the product and for all persons who interact with the product during its life cycle.

- ► Read the documentation completely before handling the product.
- ► Keep the documentation after reading.
- ► Ensure that all persons who handle the product have access to the documentation.
- ► If you forward the product to third parties, please also forward the documentation and all applicable documents.

1.1 Graduated warnings

The warnings are graduated according to the severity of the hazard.

⚠ DANGER

A note with the signal word **DANGER** warns of a hazard that will result in serious injury or death if not avoided.

⚠ WARNING

A note with the signal word **WARNING** warns of a hazard that can result in serious injury or death if not avoided.

⚠ CAUTION

A note with the signal word **CAUTION** warns of a hazrad that can result in injury of not avoided.

ATTENTION

A note with the signal word **ATTENTION** warns of a hazard that can result in damage or malfunction of the product if not avoided.

1.2 Design elements

- – The dash indicates an element within a list that does not include any action steps.
- ◊ The rhombus indicates a prerequisite that must be met before the next action step.
- ► The black triangle indicates an action step.

1.3 Symbols used

The following symbols may be present in the documentation and on the product.

Symbol	Meaning
	Warning of dangerous electrical voltage
	Warning of explosion hazard
	Warning of electrostatically charged components
	Warning of automatic start of the machine or plant
	Notice regarding the documentation or reference to related documentations
	Information next to this symbol are not safety-relevant, bit it supports correct and effective working practices.

1.4 Related documentation



In addition to the present manual, there is further documentation on the u-remote system. For special modules, please also refer to the respective manuals.
You can find all documents in the Weidmüller Support Center.

- – Webserver manual – for using the webserver application
- – Manual Modules for functional safety – for using safe I/O modules or safe feed-in modules
- – Manual IO-Link – for using UR20-4COM-IO-LINK modules
- – Manual stepper motor module – for using stepper motor modules UR20-1SM-50W-6DI2DO-P
- – Manual SAI-PRO – for using SAI subbus modules with the UR20-1COM-SAI-PRO communication module

1.5 Standard data structure



All given details of data structure (e.g. process data, parameters) refer to the u-remote internal mapping, when the standard data format is set in the coupler parameters (see table below).
The way these data are represented by other fieldbus participants (e.g. the PLC), depends additionally on the fieldbus specification and the data format of the communicating device. Therefore it might happen, that bytes are changed within a word or words are changed within a double word.

Standard data formats

Fieldbus coupler	Standard data format
UR20-FBC-PB-DP, UR20-FBC-PB-DP-V2	Motorola
UR20-FBC-PN-IRT, UR20-FBC-PN-IRT-V2, UR20-FBC-PN-ECO, UR20-FBC-PN-SL-4DIO	
UR20-FBC-MOD-TCP, UR20-FBC-MOD-TCP-V2, UR20-FBC-MOD-TCP-ECO	
UR20-FBC-CAN	Intel
UR20-FBC-EC, UR20-FBC-EC-ECO	
UR20-FBC-EIP, UR20-FBC-EIP-V2, UR20-FBC-EIP-ECO	
UR20-FBC-DN	
UR20-FBC-PL	
UR20-FBC-IEC61162-450	

1.6 Software releases described

The present manual describes the following firmware releases of the couplers:

Firmware releases

Order No.	Fieldbus coupler	Release
1334870000	UR20-FBC-PB-DP	01.09.00
2614380000	UR20-FBC-PB-DP-V2	01.19.00
1334880000	UR20-FBC-PN-IRT	01.08.00
2566380000	UR20-FBC-PN-IRT-V2	01.21.00
2659680000	UR20-FBC-PN-ECO	01.10.00
1334910000	UR20-FBC-EC, HW 01.xx.xx	01.11.00
1334910000	UR20-FBC-EC, HW 02.xx.xx	02.08.00
2659690000	UR20-FBC-EC-ECO	02.08.00
1334930000	UR20-FBC-MOD-TCP	02.07.00
2476450000	UR20-FBC-MOD-TCP-V2	02.19.00
2659700000	UR20-FBC-MOD-TCP-ECO	01.09.00
1334920000	UR20-FBC-EIP, HW 01.xx.xx	01.08.00
1334920000	UR20-FBC-EIP, HW 02.xx.xx	02.20.00
1550550000	UR20-FBC-EIP-V2	01.10.00
2799510000	UR20-FBC-EIP-ECO	01.08.00
1334900000	UR20-FBC-DN	01.14.00
1334890000	UR20-FBC-CAN	01.14.00
1334940000	UR20-FBC-PL	01.19.00
2661310000	UR20-FBC-IEC61162-450	01.02.00
2625010000	UR20-FBC-CC	01.09.00
2680260000	UR20-FBC-CC-TSN	01.10.00

Device description files

Fieldbus protocol	Release	
PROFIBUS	UR20-FBC-PB-DP	2.93
	UR20-FBC-PB-DP-V2	2.113
PROFINET	UR20-FBC-PN-IRT	20200105
	UR20-FBC-PN-IRT-V2	20261105
	UR20-FBC-PN-ECO	20261105
	UR20-FBC-PN-SL-4DIO	
EtherCAT	UR20-FBC-EC	73/75
	UR20-FBC-EC-ECO	73/75
Ethernet/IP	UR20-FBC-EIP	EDS: 1.7 L5K: 2026_11_05
	UR20-FBC-EIP-V2	EDS: 1.3 L5K: 2026_11_05
	UR20-FBC-EIP-ECO	EDS: 1.2 L5K: 2026_11_05
DeviceNet	1.6	
CANopen	1.33	
POWERLINK	01.19.00	
CC-Link	0001, Profile ver. 00B	
CC-Link IE TSN	0001, Profile ver. 01C	

Web server language files

Language	Release	Availablity
German	01.09.00	On delivery
English	01.09.00	On delivery
Chinese	01.09.00	On delivery
French	01.09.00	Available online
Italian	01.09.00	Available online
Spanish	01.09.00	Available online
Portuguese	01.09.00	Available online
Korean	01.09.00	Available online
Japanese	01.09.00	Available online

2 Safety

This section includes general safety instructions for handling the u-remote system. Specific warning notices for specific tasks and situations are given at the appropriate places in the documentation. Failure to observe the safety and warning notices can result in damage to persons and material.



When using safe I/O modules or safe feed-in modules, please also observe the **Module for Functional Safety Manual.** You can find the document in the Weidmüller Support Center.

2.1 General safety notice

Work on the u-remote products may only be performed by qualified electricians with the support of trained persons. As a result of their professional training and experience, an electrician is qualified to perform the necessary work and identify any potential risks.

Before any work is carried out on the products (installation, maintenance, retrofitting), the power supply must be switched off and secured against being switched on again. Work may be carried out with safety extra-low voltage (SELV). When working during continued operations, the emergency stop mechanisms must not be made ineffective.

The u-remote products do not comprehend any components or parts that can be maintained by the operator. If a malfunction on a u-remote product cannot be fixed after following the measures recommended in Chapter 12, the product in question must be sent back to Weidmüller. Weidmüller does not assume any liability if the product has been tampered with!

Electrostatic discharge

u-remote products can be damaged or destroyed by electrostatic discharge. When handling the products, the necessary safety measures against electrostatic discharge (ESD) according to IEC 61340-5-1 and IEC 61340-5-2 must be observed.

All devices are supplied in ESD-protected packaging. The packing and unpacking as well as the installation and disassembly of a device may only be carried out by qualified personnel and in accordance with the ESD information.

Open equipment

u-remote products are open equipment that may only be installed and operated in lockable housings, cabinets or electrical operations rooms. The enclosure must prevent the spread of fire. Only trained and authorised personnel may access the equipment.

The standards and guidelines applicable for the assembly of switch cabinets and the arrangement of data and supply lines must be complied with. For applications requiring functional safety, the surrounding housing must meet at least IP54.

Power supply

All supply sources and all external circuits intended to be connected to SELV parts of the system shall be galvanically separated from mains supply or hazardous live voltage by reinforced or double insulation and meet the requirements of SELV circuit. The output voltage of the feed-in power supply has to fulfill overvoltage category II according to IEC 61010. When connecting to outer current circuits the respective overload category has to be regarded for each single module of the u-remote station (see technical data).

Fuse protection

The operator must set up the equipment so that it is protected against overloading. The main switch, the switches of the subsequent circuits, the cable cross sections and the fuse protection have to be configured according to IEC 61010. The current demand must be calculated separately for each single u-remote station, see Chapter 4.6.

In the case of modules without fused sensor/actuator power supplies, all lines to the connected sensors/actuators must be fused corresponding to their conductor cross-section (as per DIN VDE 0298 Part 4).

To meet UL-specifications in accordance with UL 248-14, a UL-certified automatic fuse (e.g. ABB Type S201-B10) or a 10 A fuse with a medium time-lag (e.g. ESKA Part No. 522.227) must be used.

All connections of the u-remote components are protected against voltage pulses and overcurrent in accordance with IEC 61131-2, Zone B. The operator has to decide whether additional overvoltage protection according to IEC 62305 is required. Voltages that exceed +/-30 V may cause the destruction of couplers and modules.

Earthing

Via an FE spring on its underside each coupler and each module is electrically connected to the DIN rail. This connection is only established certainly if the assembly is carried out carefully and in accordance with the instructions, see Chapter 7.2. In order to ensure the earthing of the station the DIN rail must be connected to the protective earth via the earth terminals (PE).

Several modules have connections with green pushers. An FE potential is also provided at these connections. **They must not be used as a PE!**

Shielding
Shielded lines are to be connected with shielded plugs and fixed on a shield bus in compliance with the relevant standard, see Chapter 8.

Replacing the electronic unit/hot swap
The electronic unit may only be replaced during operation without load and only on certain modules, see Chapter 10.2.

2.2 Intended use

The products of the u-remote series are intended for use in industrial automation. A u-remote station with bus coupler and connected modules is intended for the decentralised control of systems or sub-systems. Via the fieldbus coupler every module of a station is integrated into a fieldbus structure and connected to the superordinate control unit. The u-remote products conform to degree of protection IP20 (in accordance with IEC 60529). The observance of the documentation is part of the intended use. The products described in this manual may only be used for the intended applications and only in connection with certified third-party devices or components. The product-specific protective measures can become ineffective in the event of deviating use.

2.3 Use in a potentially explosive atmosphere

The fieldbus couplers of the ECO series must not be used in hazardous areas!
Unless otherwise noted, the u-remote products can be used in potentially explosive atmospheres rated as Zone 2 (as per Directive 2014/34/EU). The u-remote products are suitable for use in Class I, Division 2, Groups A to D according to NFPA publication 70.
If u-remote products are used in potentially explosive atmospheres, the following notes are **also** applicable:

- Staff involved in assembly, installation and operation must be qualified to perform safe work on electrical systems protected against potentially explosive atmospheres.
- The requirements according to IEC 60079-14 must be observed.
- The substitution of any components may impair suitability for Class I, Divsion 2.
- Whenever the station setup is changed, it must be ensured that the added components are suitable for use in the potentially explosive atmospheres.
- The equipment shall be installed in an enclosure that provides a degree of protection not less than IP54 in accordance with IEC 60079-7, accessible only by the use of a tool.
- The housing enclosing must meet the requirements of explosion protection type Ex n or Ex e.
- The u-remote station may only be installed in horizontal orientation.
- Sensors and actuators that are located in Zone 2 or in a safe zone can be connected to the u-remote station.
- If the ambient temperature under rated conditions exeeds 55 °C, the cables used for feed-in (on the fieldbus coupler and on power-feed modules) must be specified for at least 90 °C.
- If the temperature under rated conditions exceeds 70 °C at the cable or conduit entry point, or 80 °C at the branching point of the conductors, the temperature specification of the selected cable shall be in compliance with the actual measured temperature values.
- The equipment shall only be used in an area of not more than pollution degree 2, as defined in IEC 60664-1.
- A stabilized 24 V DC power supply with double or reinforced insulation shall be used.
- A visual inspection of the u-remote station is to be performed once per year.
- When using relay modules UR20-4RO-CO-255, solid state relay modules UR20-4RO-SSR-255 or UR20-4DI-2W-230V-AC modules in explosive atmosphere:
  - The device shall be installed in an environment free of condensation, corrosives and conducting dusts.
  - If the switching voltage, the input voltage or the output exceeds 63 V, a transient protection device shall be provided that limits the transients to a peak voltage of 500 V or less.
- When using relay modules UR20-4RO-CO-255 in explosive atmosphere:
  - Make sure that the module will not be exposed to chemicals, which may degrade the sealing properties of materials used in the relay.
  - Due to the fact that relays are subject to wear, it must be ensured, by appropriate maintenance intervals, that the temperature do not exceed the limits of temperature class T4. A contact resistance of more than 110 mΩ will be considered as a fault.
  - The modules may only be charged with resistive loads.
- While explosive atmosphere is present:
  - No electrical connection shall be separated in energized condition.
  - The USB interface shall not be used.
  - Dip-switches, binary-switches and potentiometers shall not be actuated.

2.4 Legal notice

The u-remote UR20 series products are CE-compliant in accordance with the following directives:
- 2014/30/EU, EMC Directive
- 2014/35/EU, Low Voltage Directive
- 2014/34/EU, ATEX Directive (unless otherwise noted)

The u-remote UR20 series products are UKCA-compliant in accordance with the following regulations:
- SI2016/1091, Electromagnetic Compatibility Regulations 2016
- SI2016/1101, Electrical Equipment (Safety) Regulations 2016
- SI2016/1107, Equipment and Protective Systems Intended for Use in Potentially Explosive Atmospheres Regulations 2016 (unless otherwise noted)

The test reports according to CISPR 16-2-3 should also be suitable to demonstrate the compliance of the u-remote devices to the limits for radiated emissions as defined by CFR 47 Part 15, Subpart B, §15.109, Class A (2010) and ICES-003, Issue 5, Class A (2012).

Components of free software products are integrated in the u-remote products. You can find a list of the open source software components used and their licences in the web server in the help function.

3 System overview

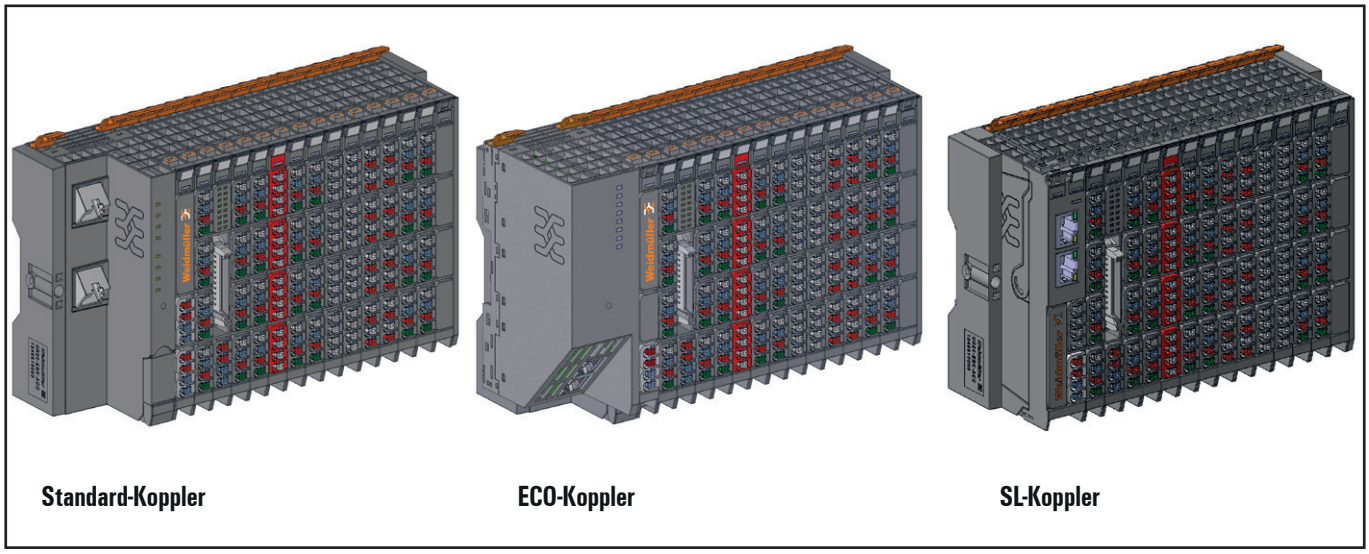

Example arrangement u-remote stations with different coupler designs

The modular u-remote system supports common fieldbus systems and conforms to IEC 61131-2. Each station is assigned a bus address in the fieldbus structure. Only the coupler is fieldbus-specific; the I/O modules are independent of the fieldbus.
Depending on the design of the fieldbus coupler used, a varying number of active I/O modules can be comined in a u-remote station:
- Standard fieldbus coupler: maximum 64
- ECO fieldbus coupler: maximum 16
- SL fieldbus coupler: maximum 12

The largest station expansion possible depends on the maximum amount of data transmitted by the selected fieldbus, in particular the configuration data, parameter data, and process data for the module types provided.

The following components belong to the u-remote series:
- **Fieldbus coupler** (gateway): Head station for converting the respective fieldbus protocol on the u-remote system bus
- **Active I/O modules**:
  - Modules with digital input (DI) or digital output (DO) with 2, 4, 8 or 16 channels
  - Modules with analogue input (AI) or analogue output (AO) with up to 8 channels
  - Pulse width modulation modules (PWM)
  - Stepper motor module
  - Digital counter modules (CNT)
  - Digital interface modules (SSI)
  - Safe I/O modules
  - Communication modules (COM)
  - Subbus modules (SAI Active)
  - Safe power-feed modules (
  - PF-O-xDI-SIL) 24 V for output current, providing one or two inputs (with two channels each) for safety circuits
- **Passive I/O modules** (no fieldbus communication)
  - 24-V power-feed modules (PF) for input or output current
  - Potential distribution modules (AUX)
  - Empty modules acting as placeholders (ES)
- Mechanical **fixing elements**
  - End bracket
  - End plate

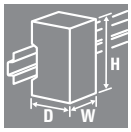	Height (H)	Width (W)	Depth (D)
Standard fieldbus coupler, ECO coupler	120.0 / 4.72	52.0 / 2.05	76.0 / 2.99
SL coupler	120.0 / 4.72	23.0 / 0.91	76.0 / 2.99
I/O module	120.0 / 4.72	11.5 / 0.45[1)]	76.0 / 2.99
End plate	120.0 / 4.72	3.5 / 0.14	76.0 / 2.99
End bracket	120.0 / 4.72	8.0 / 0.32	36.0 / 1.42
1) Stepper motor module: 23 mm / 0.91"			

Dimensions of the u-remote components (mm / inch)

"Double-click" installation

The u-remote components can be installed quickly and simply. When attaching the module to the DIN rail, a clear clicking noise can be heard, which means that the component has clicked into place. In the second step, which involves pushing the component being installed together with the neighbouring component, a further clicking noise indicates that the components have been correctly connected to each other.

Power supply concept with standard fieldbus coupler

The u-remote system uses three internal current paths as described in following chapter 4. A standard fieldbus coupler supplies the system and the input path as well as the output path galvanically seperated via two connections. A custom-fit refreshing by power-feed modules is easyly feasible.
The figure shows the general supply concept. For detailed description and calculation of the current demand please regard sections 4.7 and 4.8.

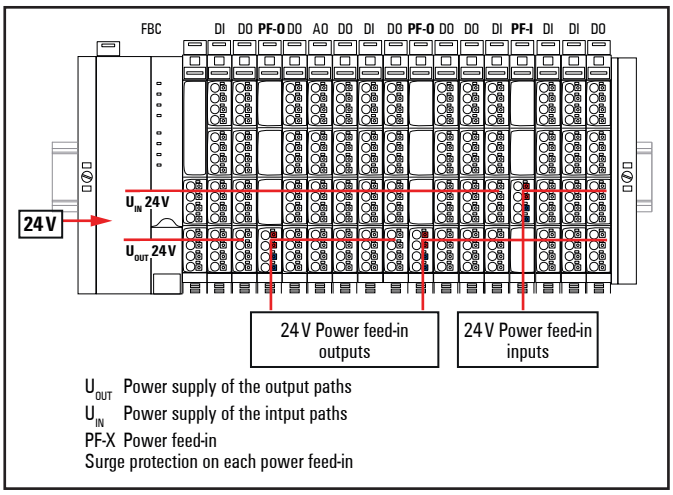

Power supply of a u-remote station with standard fieldbus coupler

Power supply concept with ECO fieldbus coupler

The u-remote system uses three internal current paths as described in following chapter 4. An ECO fieldbus coupler supplies the three current pathes via the same connection. A custom-fit refreshing by power-feed modules is easyly feasible.
The figure shows the general supply concept. For detailed description and calculation of the current demand please regard sections 4.7 and 4.8.

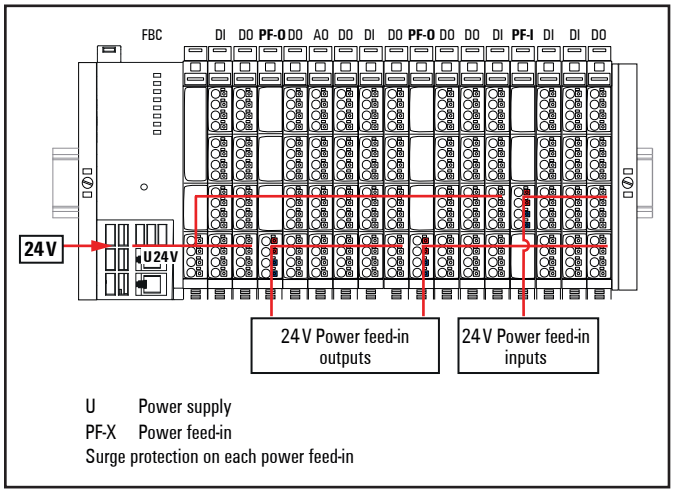

Power supply of a u-remote station with ECO fieldbus coupler

Power supply concept with SL fieldbus coupler

The u-remote system uses three internal current paths as described in following chapter 4. An SL fieldbus coupler supplies the three current pathes via the same connection. A custom-fit refreshing by power-feed modules is easyly feasible.
The figure shows the general supply concept. For detailed description and calculation of the current demand please regard sections 4.7 and 4.8.

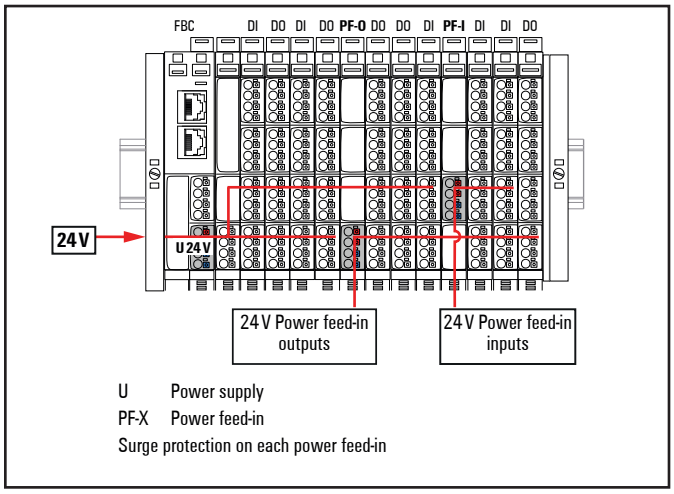

Power supply of a u-remote station with SL fieldbus coupler

3.1 General description of the fieldbus coupler

A fieldbus coupler is used to connect the station I/O modules to the fieldbus. All of the data traffic with the programmable logic controller including the diagnostic messages is exchanged via the coupler. The integrated power supply provides the coupler and all connected modules with power. A detailed description of the individual coupler variants is available in Chapter 5.

The UR20 fieldbus couplers are available in three designs: Standard, ECO and SL (slim line). The Standard version offers the widest range of functions and the greatest expandability. With the ECO and SL versions, the number of modules that can be daisy-chained is lower, and these two versions feature a single power connector to supply all current paths. Only the SL couplers feature an integrated local I/O module with 4 channels.

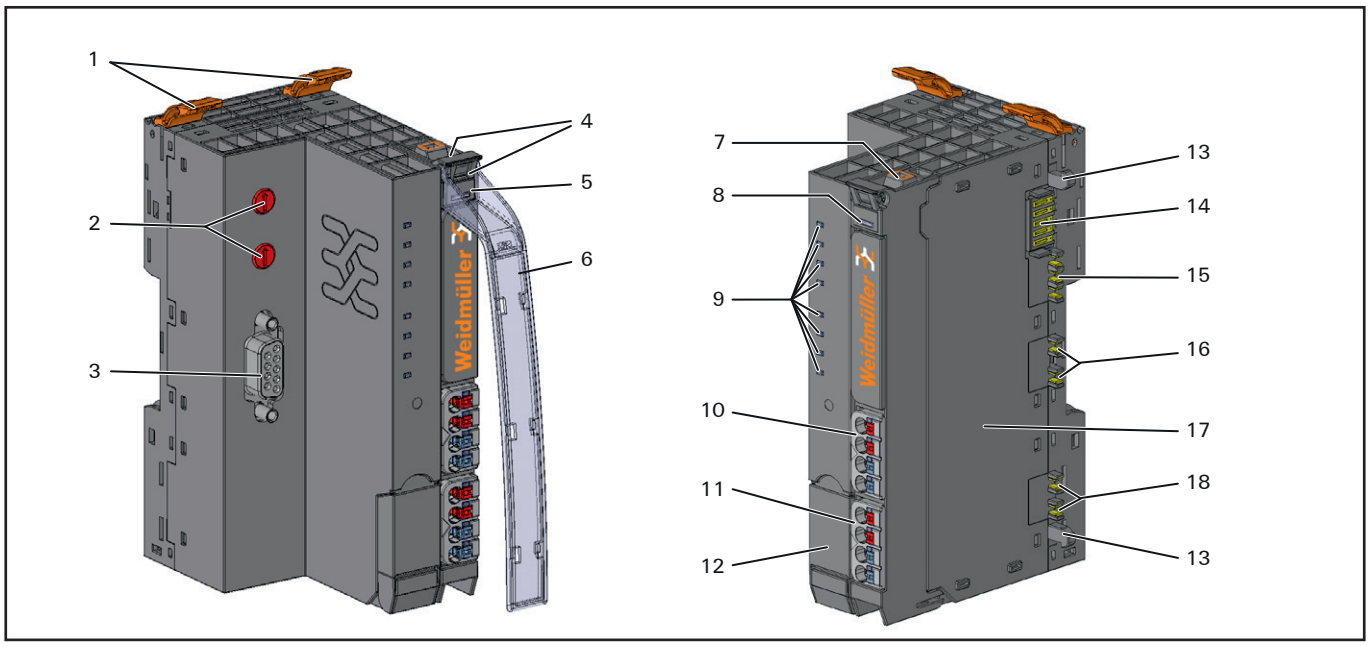

Standard coupler (example: UR20-FBC-PB-DP)

1 Release lever for the DIN rail fixing
2 Rotary switch
3 Data line connection (e.g. SUB-D socket)
4 Seats for module markers
5 Type designation
6 Swivel marker for labelling modules and channels (optional)
7 Connector frame unlocking device
8 LED power supply coupler
9 Fieldbus/coupler status LEDs
10 Power supply connector for the system and input modules
11 Power supply connector for output modules
12 Service flap (access USB port)
13 Latching hook for latching onto module sides
14 System bus
15 System current path
16 Input current path
17 Type plate
18 Output current path

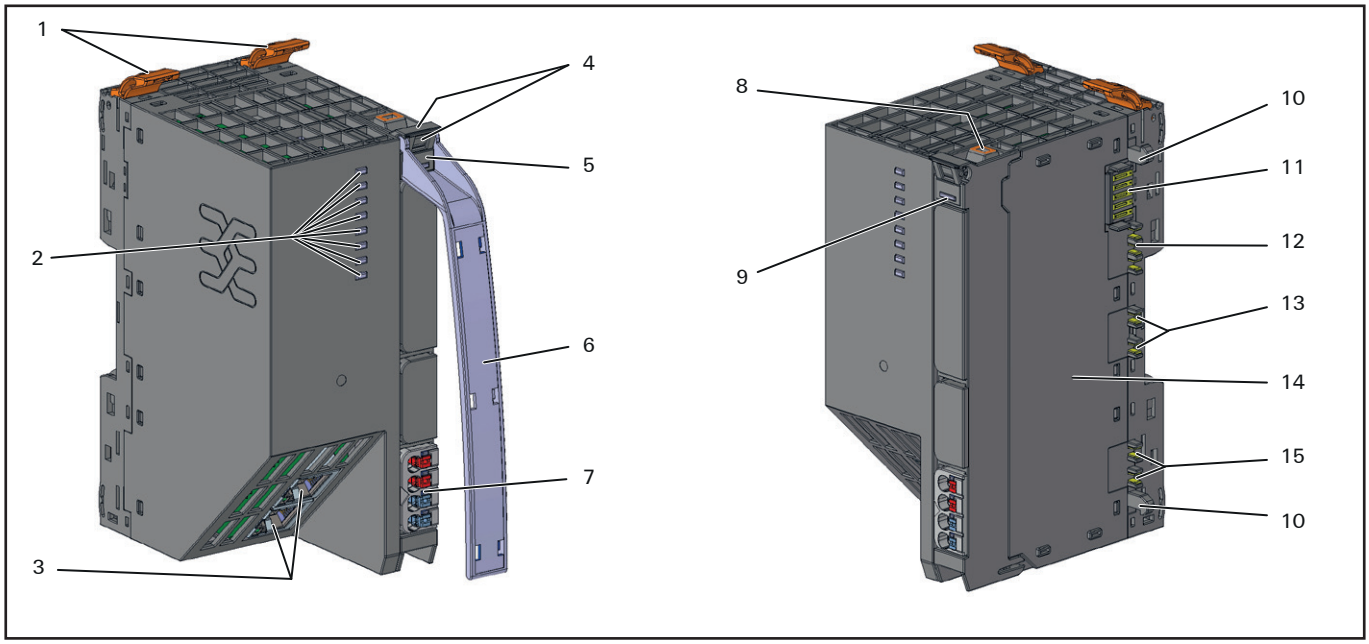

ECO coupler (example: UR20-FBC-PN-ECO)

1 Release lever for the DIN rail fixing
2 Fieldbus/coupler status LEDs
3 Data line connection (e.g. Ethernet)
4 Seats for module markers
5 Type designation
6 Swivel marker for labelling modules and channels (optional)
7 Power supply connector for the system, input and output modules
8 Connector frame unlocking device
9 LED power supply coupler
10 Latching hook for latching onto module sides
11 System bus
12 System current path
13 Input current path
14 Type plate
15 Output current path

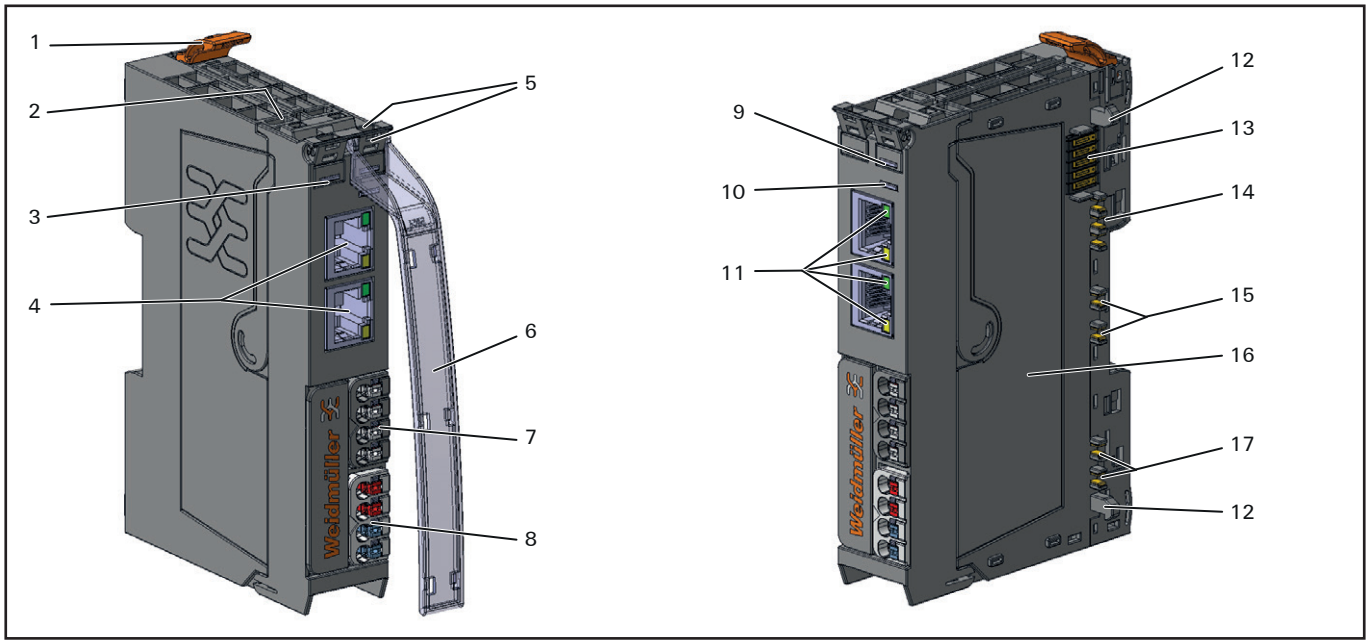

SL-Koppler (Beispiel UR20-FBC-PN-SL-4DIO)

1 Release lever for the DIN rail fixing
2 Connector frame unlocking device
3 Type designation
4 Data line connection (Ethernet)
5 Seats for module markers
6 Swivel marker for labelling modules and channels (optional)
7 Lokal I/Os
8 Power supply connector for the system, input and output modules
9 LED module status
10 LED network status
11 Status LEDs and activity LEDs Ethernet
12 Latching hook for latching onto module sides
13 System bus
14 System current path
15 Input current path
16 Type plate
17 Output current path

3.2 General technical data for the fieldbus coupler

Type of connection	PUSH IN	Single-wired, Fine-wired
		Conductor cross-section 0.14 – 1.5 mm² (AWG 26 – 16)
Configuration interface	USB 2.0[1)]	
Dimensions	Height	120.0 mm / 4.72" (with release lever: 128.0 mm / 5.04")
	Width	Standard and ECO: 52.0 mm / 2.05" SL: 23,0 mm / 0.91"
	Depth	76.0 mm / 2.99"
Degree of protection (IEC 60529)	IP20	
Flammability rating UL 94	V-0	
Material of power contacts and data contacts	Ni-Au, 3 µm	
Temperature data	All product-specific temperature data are available in the corresponding product description in Chapter 5.	
Humidity	Operation	95 %, non-condensing as per IEC 61131-2
	Storage, transport	95 %, non-condensing as per IEC 61131-2
Air pressure	Operation[2)]	≥ 795 hPa (altitude ≤ 2000 m) as per IEC 61131-2
	Storage, transport	≥ 700 hPa (altitude ≤ 3000 m) as per IEC 61131-2
Vibration resistance	5 Hz ≤ f ≤ 8.4 Hz: 3.5 mm amplitude as per IEC 60068-2-6 8.4 Hz ≤ f ≤ 150 Hz: 1 g acceleration as per IEC 60068-2-6	
Shock resistance	15 g over 11 ms, half sinewave, as per IEC 60068-2-27	
Potential isolation	Test voltage[1)]	max. 28.8 V within one channel 500 V DC field/system (as per EN 60079-15:2017)
	Pollution severity level	2 (as per DIN EN 60664-1:2008)
	Overvoltage category	II (as per DIN EN 50178)
Approvals and standards	cULus	UL 61010 UR20-FBC-DN, UR20-FBC-CAN: UL 508
	Maritime and offshore applications[1)]	see annex
	EMC	IEC 61000 (partial standards as per the requirements of IEC 61131-2)
	Potentially explosive atmosphere Zone 2[1)]	IEC 60079-0:2017+Corr.1:2020, IEC 60079-7:2017 EN IEC 60079-0:2018, EN IEC 60079-7:2015+A1:2018
	PLC	IEC 61131-2

1) Only with standard fieldbus couplers
2) Higher altitudes are possible when particular deratings are considered. Please contact your responsible Weidmüller company as needed.

All product-specific technical data are available in the corresponding product description in Chapter 5.

3.3 General description of I/O modules

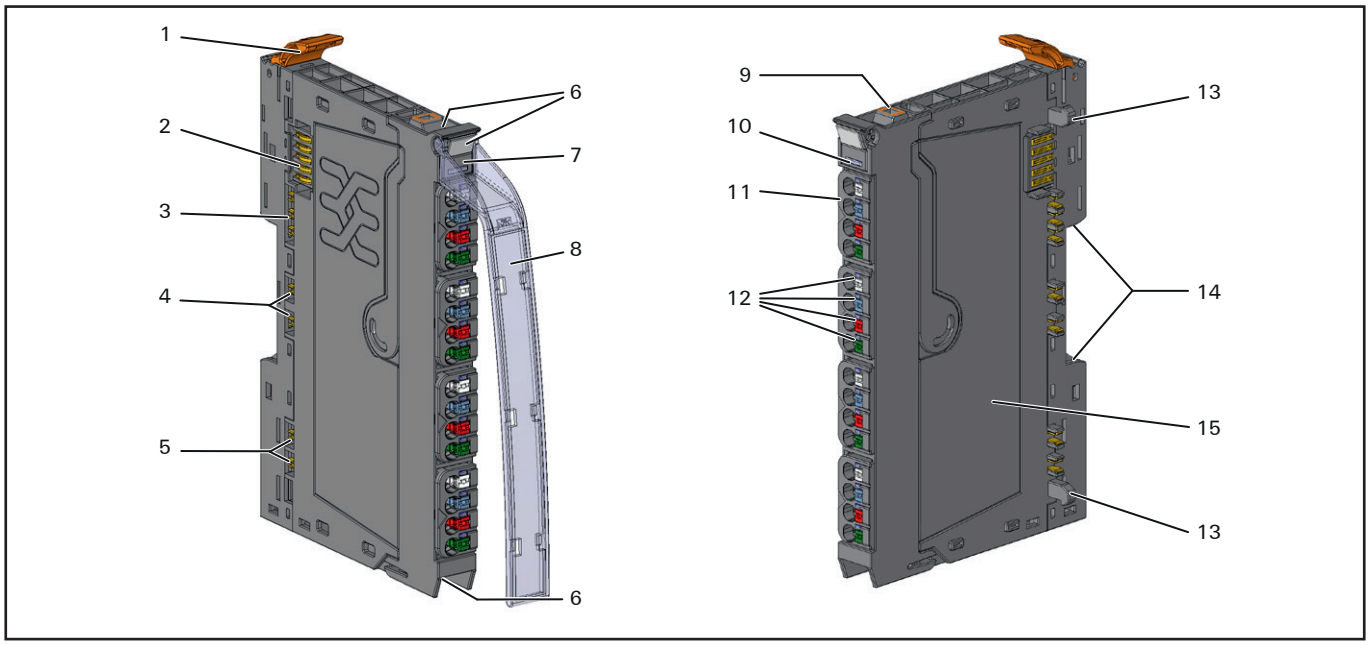

I/O module (Example UR20-4-DI-P)

1 Release lever for the DIN rail fixing
2 System bus
3 System current path
4 Input current path
5 Output current path
6 Seats for module markers
7 Type designation
8 Swivel marker for labelling modules and channels (optional)
9 Connector frame unlocking device
10 Module status LED (collective message)
11 Connector
12 Channel status LEDs
13 Latching hook for latching onto module sides
14 DIN rail foot
15 Type plate

Colour coding

The removal lever for the electronic unit as well as the connectors are colour-coded as follows:

Black	standard
White	power supply
Red	230 V
Yellow	functional safety

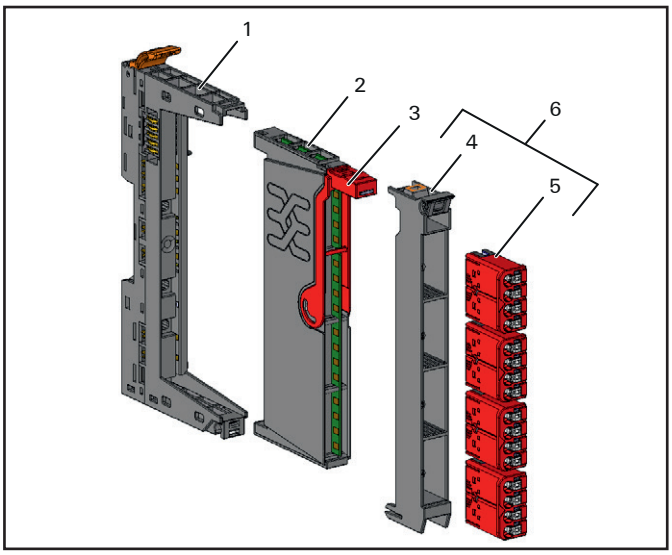

I/O module components

1 Base module
2 Electronic unit
3 Removal lever for electronic unit
4 Connector frame
5 Connector
6 Plug-in unit

A detailed description of the individual module types is available in Chapter 6.

Connector PG 1.5 mm

The connector frame can take up to four connectors, and four conductors can be connected to each connector. PUSH IN technology allows for fine-wired conductors with crimped wire-end ferrules or ultrasonically welded conductors, each with a maximum cross-section of 1.5 mm², to be inserted easily through the opening in the clamping terminal without having to use tools. To insert fine-wired conductors without wire-end ferrules, the pusher must be pressed in with a screwdriver (wiring see section 7.5).

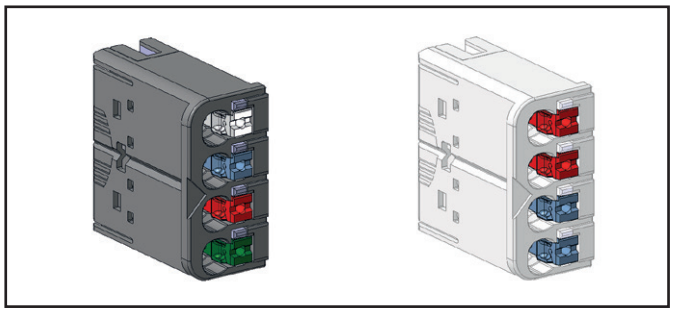

Connector PG 1.5 mm with four conductor connections, power supply connector

- conductor cross-section 0.14 to 1.5 mm² (AWG 26 – 16)
- max. ampacity: 10 A
- 4-pole

The pushers are colour-coded for the following connections:

White	Signal DC or AC
Blue	GND
Red	24 V DC
Green	Functional earth (FE)
Black	Signal AC

HD connector PG 0.35 mm

The connection frame can take up to four times two HD connectors UR20-PG0.35, and qualified SAI cables* with a cross-section from 0.14 to 0.35 mm² can be connected to each connector via insulation displacement contact (IDC) (wiring see section 7.5). A list of SAI cables approved for the use with HD-connectors (Document-No. 1541020000) is available to download from the Weidmüller website.

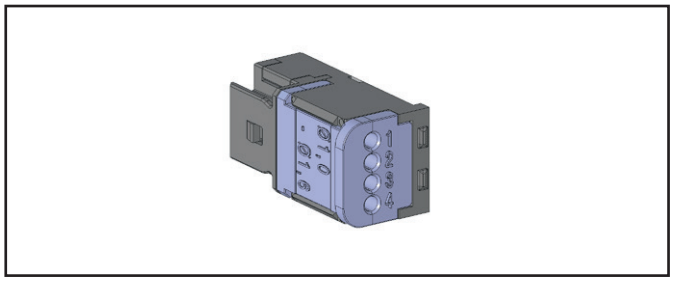

HD Connector UR20-PG0.35 for HD modules

- conductor cross-section: 0.14 to 0.35 mm² (AWG 26 – 22)
- insulation diameter 1.0 to 1.6 mm (0.04 to 0.06")
- max. ampacity: 1 A
- 4-pole

Tools

- multi-stripax 6-16 (Item No. 9202210000)
- Pressing tool PWZ-UR20-HD (Item No. 1525820000)

PLC interface connection

Certain modules are provided with a 20-pole connection that enables to connect pre-assembled interface units.

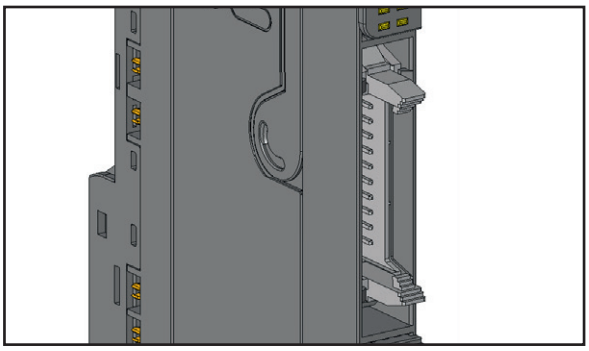

PLC interface connection

- max. ampacity: 1 A per contact
- 20-pole

Accessories

- Pre-assembled cable, e.g. PAC-UNIV-HE20-LCH-1M (Item No. 7789306010)
- Direct input/output digital interface RS 16IO 1W H S (Item No. 9445700000)

Cable protection

The modules listed in the following table do not have a fused sensor/actuator power supply. Thus, all cables to the connected sensors/actuators must be fused corresponding to their conductor cross-sections (as per Standard DIN EN 60204-1, section 12).

Module	Item No.
Digital input modules	
UR20-4DI-P	1315170000
UR20-4DI-P-3W	2009360000
UR20-8DI-P-2W	1315180000
UR20-8DI-P-3W	1394400000
UR20-16DI-P-PLC-INT	1315210000
UR20-2DI-P-TS	1460140000
UR20-4DI-P-TS	1460150000
UR20-4DI-N	1315350000
UR20-8DI-N-3W	1315370000
UR20-16DI-N-PLC-INT	1315400000
Digital output modules	
UR20-4DO-P	1315220000
UR20-4DO-P-2A	1315230000
UR20-4DO-PN-2A	1394420000
UR20-16DO-P-PLC-INT	1315270000
UR20-4DO-N	1315410000
UR20-4DO-N-2A	1315420000
UR20-16DO-N-PLC-INT	1315450000
Analogue input modules	
UR20-4AI-UI-16	1315620000
UR20-4AI-UI-12	1394390000
UR20-8AI-I-PLC-INT	1315670000
Functional modules	
UR20-2PWM-PN-0.5A	1315600000
UR20-2PWM-PN-2A	1315610000
UR20-1SM-50W-6DI2DO-P	2489830000
UR20-1CNT-100-1DO	1315570000
UR20-2CNT-100	1315590000
UR20-2FCNT-100	1508080000

Module	Item No.
Potential distribution modules	
UR20-16AUX-I	1334770000
UR20-16AUX-O	1334780000
UR20-16AUX-GND-I	1334800000
UR20-16AUX-GND-O	1334810000

3.4 General technical data for I/O modules

Type of connection	PUSH IN	Single-wired, fine-wired
		Conductor cross-section 0.14 – 1.5 mm² (AWG 26 – 16)
	IDC (modules UR20-...-HD)	Single-wired, fine-wired
		Conductor cross-section 0.14 – 0.35 mm² (AWG 26 – 22)
Dimensions	Height	120.0 mm / 4.72" (with release lever: 128.0 mm / 5.04")
	Width	11.5 mm / 0.45" (Stepper motor module: 23 mm / 0.90")
	Depth	76.0 mm / 2.99"
Degree of protection (IEC 60529)	IP20	
Flammability rating UL 94	V-0	
Material of power contacts and data contacts	Ni-Au, 3 µm	
Temperature data	Operation[1)]	-20 °C ... +60 °C / -4 °F ... +140 °F
	Storage, transport	-40 °C ... +85 °C / -40 °F ... +185 °F
Humidity	Operation, storage, transport	5 % to 95 %, non-condensing as per IEC 61131-2
Air pressure	Operation[2)]	≥ 795 hPa (altitude ≤ 2000 m) as per IEC 61131-2
	Storage, transport	≥ 700 hPa (altitude ≤ 3000 m) as per IEC 61131-2
Vibration resistance	5 Hz ≤ f ≤ 8.4 Hz: 3.5-mm amplitude as per IEC 60068-2-6 8.4 Hz ≤ f ≤ 150 Hz: 1-g acceleration as per IEC 60068-2-6	
Shock resistance	15 g over 11 ms, half sinewave, as per IEC 60068-2-27	
Tolerances on disturbing influence[3)]		
Electromagnetic fields	EN 61000-4-3/IEC 61000-4-3	< ±1,0%
Burst	EN 61000-4-4/IEC 61000-4-4	< ±1,0%
Conducted disturbances	EN 61000-4-6/IEC 61000-4-6	< ±1,0%
Potential isolation	Test voltage[4)]	max. 28.8 V within one channel 500 V DC field/system (as per EN 60079-15:2017)
	Pollution severity level	2 (as per DIN EN 60664-1:2008)
	Overvoltage category	II (as per DIN EN 50178)
Approvals and standards	cULus	UL 508 or UL 61010 (see module descriptions)
	Maritime and offshore applications	see annex
	EMC	IEC 61000 (partial standards as per requirements of IEC 61131-2) Analogue input and analogue output modules have a maximum temporary deviation of ±1%.
	Potentially explosive atmosphere Zone 2[3)]	IEC 60079-0:2017+Corr.1:2020, IEC 60079-7:2017, IEC 60079-15:2017 EN IEC 60079-0:2018, EN IEC 60079-7:2015+A1:2018, EN IEC 60079-15: 2019
	PLC	IEC 61131-2

1) Exception: For UR20-8AI-I-PLC-INT the range is -20 °C ... +55 °C / -4 ... +131 °F
2) Higher altitudes are possible when particular deratings are considered. Please contact your responsible Weidmüller company as needed.
3) Unless otherwise noted within the product-specific technical data
4) Exceptions: UR20-4RO-SSR-255 and UR20-4RO-CO-255 have been tested with 2500 V

All product-specific technical data are available in the corresponding product description in Chapter 6.

3.5 Current-voltage characteristic

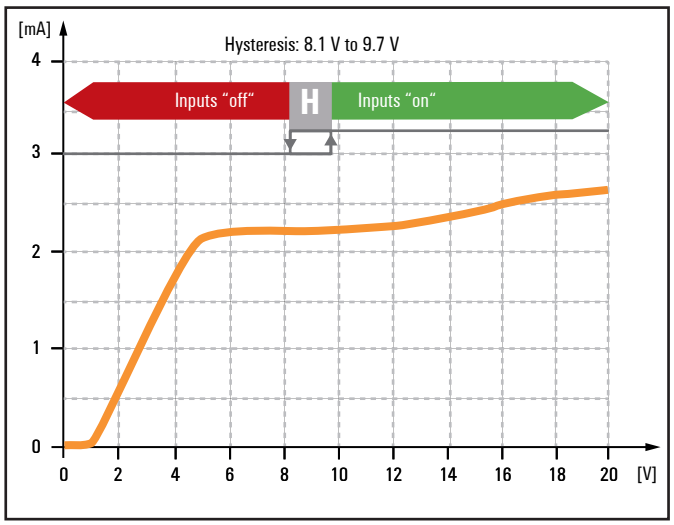

Current-voltage characteristic of P-switching digital inputs

3.6 Mechanical fixing elements

The station is fixed in the installation position by an end bracket at either side. The last I/O module is protected against dust by a cover plate, into which the second end bracket is inserted and screwed to the mounting rail. Every u-remote coupler is supplied with a termination kit.

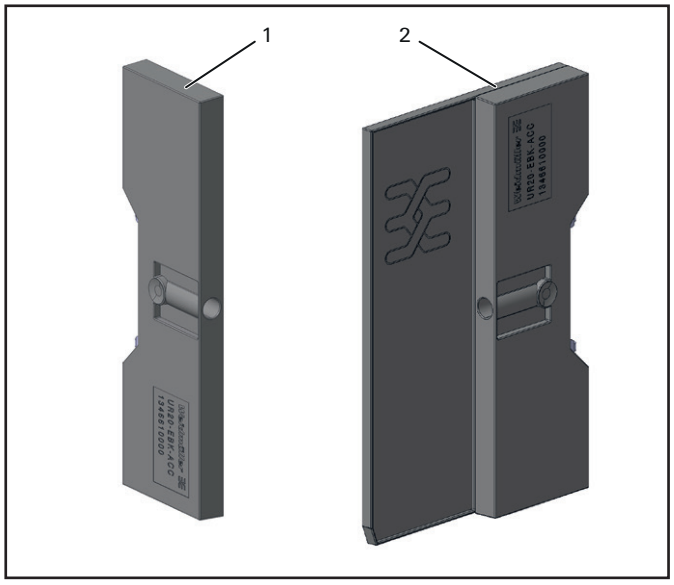

u-remote station fixing elements

1 End bracket (left end, on the coupler side)
2 Termination kit with end plate and end bracket (right end)

For vertical installation, a special end bracket (Item No. 1805610000 MEW 35/1) must also be installed below the station.

3.7 Type plate

Each product carries a type plate with identification information, warning symbols and the key technical specifications. A breakdown of the serial numbers can be found in the table provided in the annex.
A QR code allows for direct online access to the associated documentation. The software for reading the QR code must support inverted QR codes.

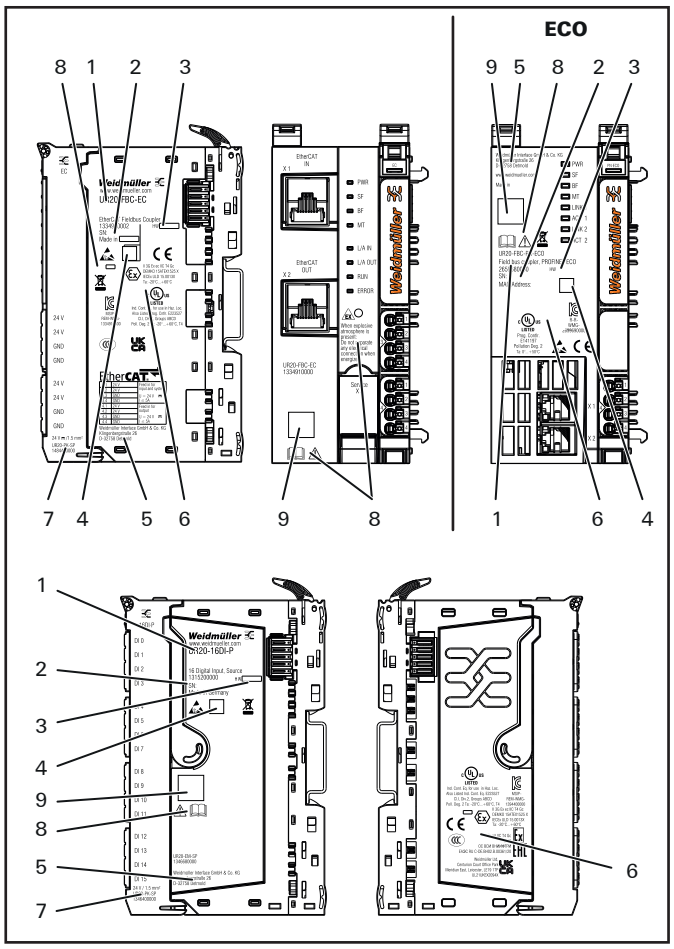

Type plate (examples)

1 Product name and Item No.
2 Serial number
3 Hardware version
4 Manufacturing code
5 Manufacturer address
6 Approvals and conformity signs
7 Replacement part Item No.
8 Warning symbols
9 QR code

Symbols on the type plate

The following symols can be placed on the type plate.

Symbol	Meaning
	Oberserve the documentation
	Oberserve the disposal notice
	Warning of electrostatic discharge
	Warning for use in potentially explosive atmospheres
	Information on Ex approvals
	EU Conformity
	UK Conformity
	Certification for China
	Certification for Korea

3.8 Markers

A wide range of markers are available as accessories for labelling equipment.

Module marker

Each I/O module can be labelled at three points using the markers. This ensures clear allocation when replacing individual modules or electronic units.

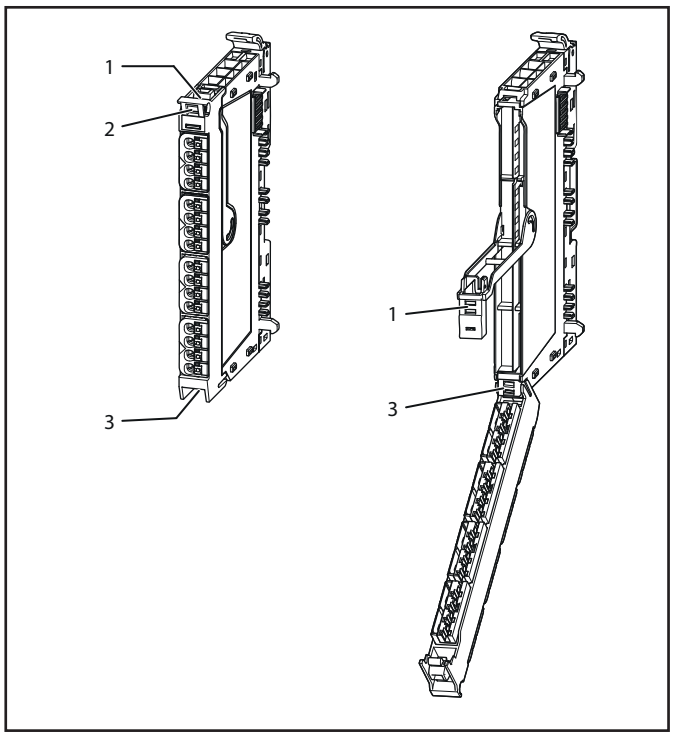

Three attachment points for module markers

The following markers are available as accessories:

- White (DEK 5/8-11.5 MC NE WS, Item No. 1341630000), can be printed with the Weidmüller Print-Jet ADVANCED (Item No. 1324380000)

Connection marker for lines and channels

The connection marker is used to label lines and channels, and is attached to the pusher for the connector.
The following markers are available as accessories:

- White (PM 2.7/2.6 MC NE WS, Item No. 1323710000) or yellow (PM 2.7/2.6 MC NE GE, Item No. 1435010000) can be printed with the Weidmüller Print-Jet ADVANCED (Item No. 1324380000)
- With custom printing as per customer specifications (Item No.1323700000)

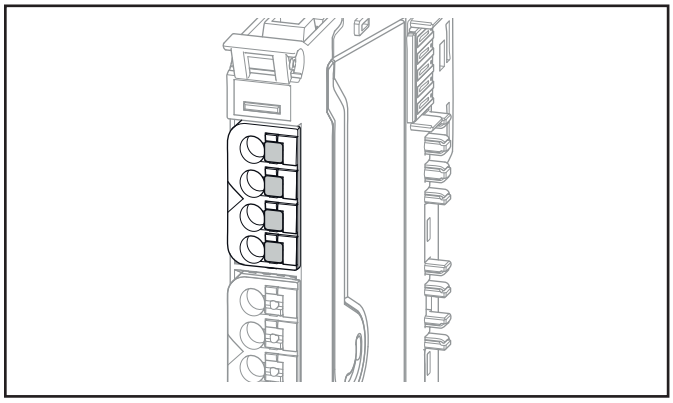

Connection marker

Swivel marker

Swivel markers (UR20-SM-ACC, Item No. 1339920000) allow for modules and all respective channels and lines to be labelled in detail. They are attached to the connector frame.

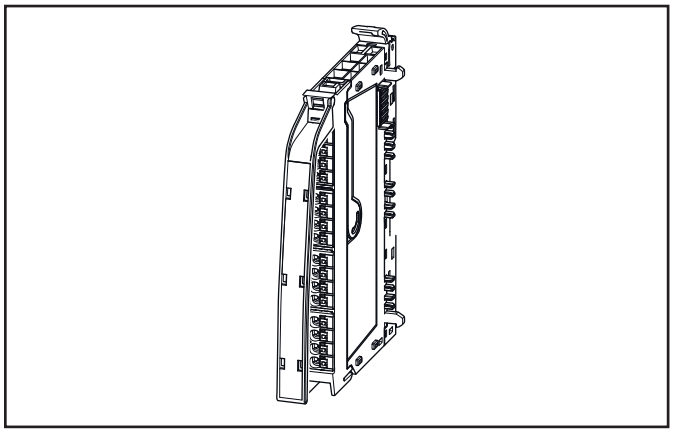

Module with swivel marker

The following labels are available for the labelling:

- Thermal transfer printer labels for printing with a thermal transfer printer (THM MMP, Item No. 2430920000)
  - White, Item No.1429420000 THM UR20 WS
  - Yellow, Item No. 1429910000 THM UR20 GE
- Paper labels (ESO UR20 DIN A4 WS, Item No. 1429430000) for printing with laser printers

End bracket marker EM 8/30

The end bracket of the u-remote station can be fitted with an end bracket marker EM 8/30 (Item No. 1806120000).

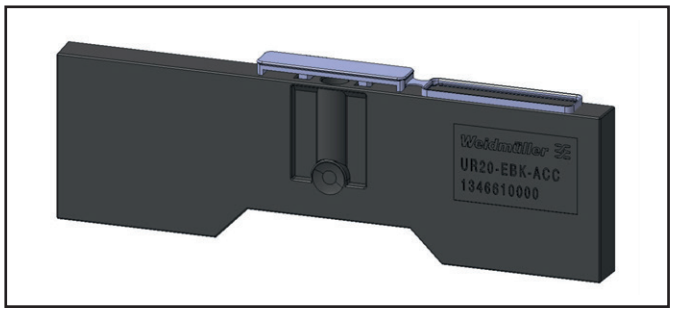

End bracket with end bracket marker

The following markers are available for the labelling:

- Markers for printing with a Weidmüller PrintJet ADVANCED (Item No. 1324380000)
  - Item No. 1045570000, ELS 6/30, white, PA 66
  - Item No. 1045580000, ELS 6/30, yellow, PA 66
- Markers for printing with a Weidmüller THM MMP (Item No. 2430920000)
  - Item No. 2009980000, ELS 6/30 MM, white, polyester
  - Item No. 2010620000, ELS 6/30 MM, yellow, polyester
- Labels for printing with laser printers
  - Item No. 1607720000, ESO 7 white, paper
  - Item No. 1634780000, ESO 7 yellow, paper
  - Item No. 1670390000, ESO 7 P white, polyester
  - Item No. 1670400000, ESO 7 P yellow, polyester

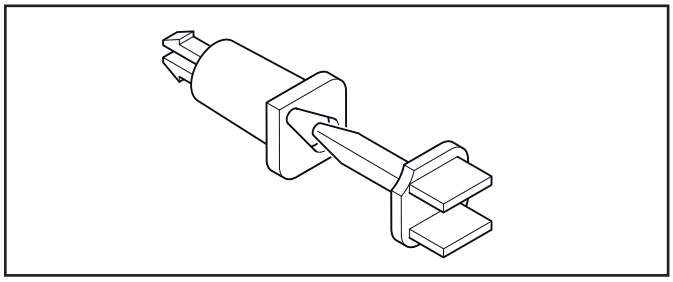

Socket and pin for position coding

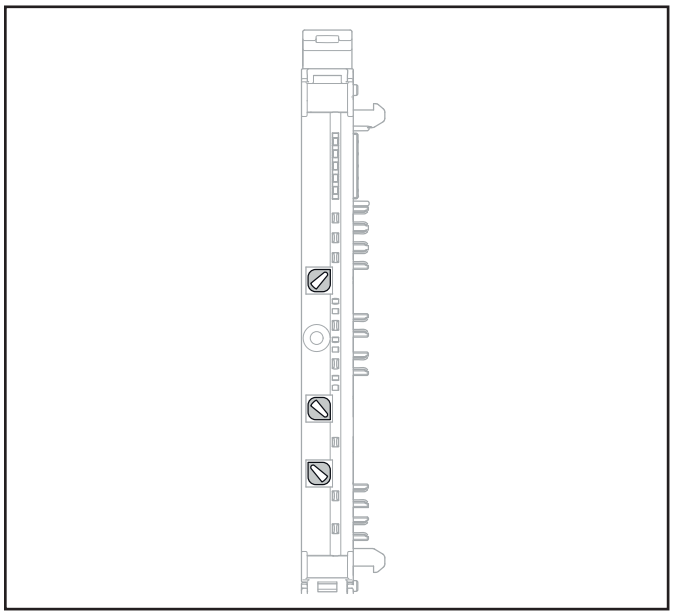

Basic module with inserted coding sockets

3.9 Module codings

Position coding

In order to prevent an electronic module being mismated, the modules can be coded by the customer. Coding is carried out by two small components: the orange coding socket and the black coding pin. Three codings can be applied to each basic module (see chapter 7.3).

Functional coding

The I/O modules are mechanically coded using three cut-outs in the circuit board. There are four different function codes for:

- I/O modules
- Power-feed modules for the input current path (UR20-PF-I)
- Power-feed modules for the output current path (UR20-PF-O)
- Safe power-feed modules (UR20-PF-O-xDI-SIL)

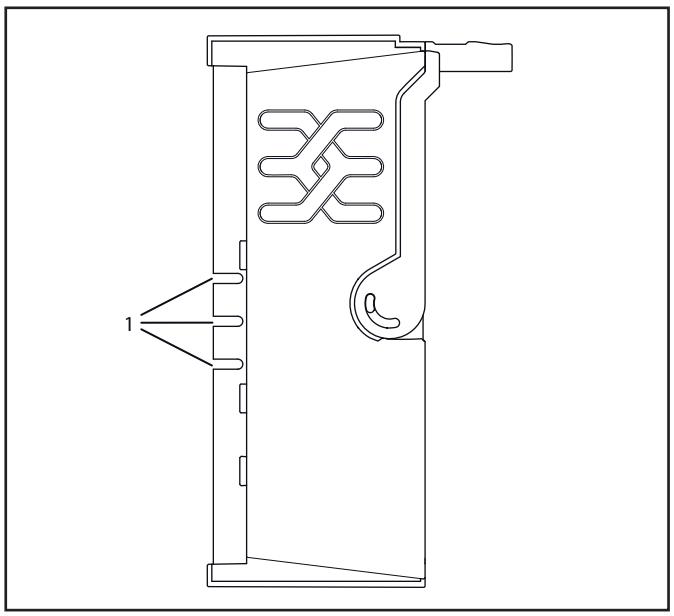

Electronic unit with coding cut-outs (1) in the PCB

4 Configuration

4.1 Order and arrangement of the modules

The u-remote station is designed to be installed on a DIN rail (35 × 7.5 mm or 35 x 15 mm) made from steel or galvanised steel according to EN 60715.

- A u-remote station may be built up to a maximum length of 1 m. Therefore at most 82 modules can be aligned on a coupler.
- Depending on the design of the fieldbus coupler used, a varying number of **active** I/O modules can be comined in a u-remote station:
  - Standard fieldbus coupler: maximum 64
  - ECO fieldbus coupler: maximum 16
  - SL fieldbus coupler: maximum 12
- Connected subbus modules have to be considered as active modules when planning the u-remote station.
- A maximum of 3 of the following module types may be installed in a u-remote station, either of the same type or mixed:
  - UR20-1COM-SAI-PRO
  - UR20-4COM-IO-LINK
- In combination with a UR20-FBC-PL fieldbus coupler, the UR20-1COM-SAI-PRO must not be configured as the first IO module.
- When planning the u-remote station, please regard the combinability of fieldbus couplers with I/O modules, see release notes.

A u-remote station may only be installed in this sequence (starting from the left/bottom):
- End bracket
- Bus coupler
- Modules
- End plate and end bracket

Arrangement of passive modules

Passive modules are power-feed module, potential distribution module, empty slot module and auxiliary module.In a u-remote station, a maximum of three passive modules may be installed directly behind each other, then an active module must follow. Any number of passive modules can be placed behind the last active module.

Arrangement of safe power-feed modules

A safe power-feed module PF-O-xDI-SIL module can be positioned anywhere in the u-remote station. All of the following output modules (except for the UR20-4RO-CO-255 and UR20-4RO-SSR-255 relay modules) up to the next PF-O module will be safely disconnected (safety segment). Multiple PF-O-xDI-SIL modules/safety segments can be arranged within a station.

When using safe power-feed modules, please also observe the **Modules for Functional Safety Manual.**
You can find the document in the Weidmüller Support Center.

4.2 Orientation of the station

The u-remote station is usually installed on a horizontally positioned DIN rail.

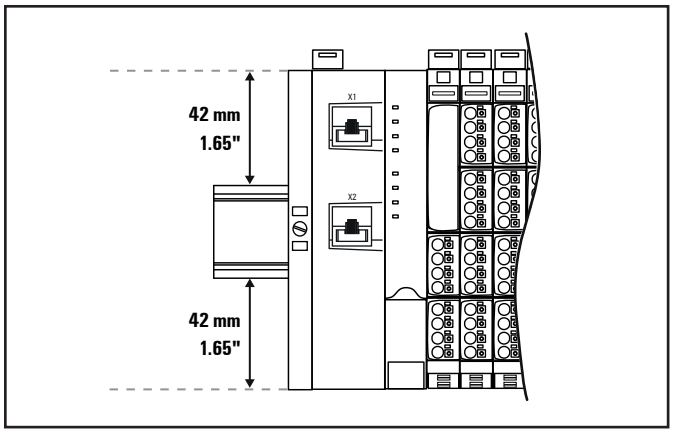

Installation position of the u-remote station on the DIN rail (horizontal installation)

Installation on vertically positioned DIN rails is also possible. In this case however, the heat dissipation is reduced such that the derating values change (see Section 4.5).
In the case of vertical mounting, the fieldbus coupler must always be arranged as the first module at the bottom and secured with a MEW 35/1 end bracket for vertical mounting (Item No. 1805610000).

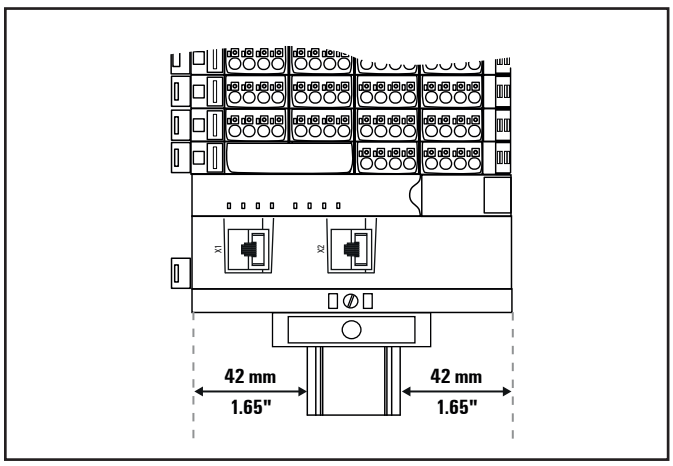

Installation position of the u-remote station on the DIN rail (vertical installation)

4.3 Installation distances

In order to be able to carry out the installation and subsequent maintenance work and to ensure sufficient ventilation, the u-remote station must be installed while observing the following minimum distances (see the following figures).

ATTENTION

Depending on how the station shielding is implemented, the specified distances may have to be made larger, where necessary.

The minimum permissible conductor bending radii must also be observed. Earth terminals already installed can be ignored when calculating the distance.

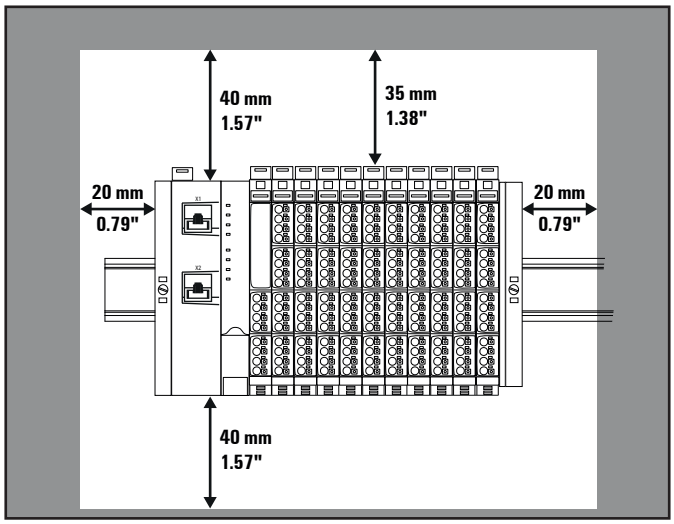

Minimum distances for horizontal installation

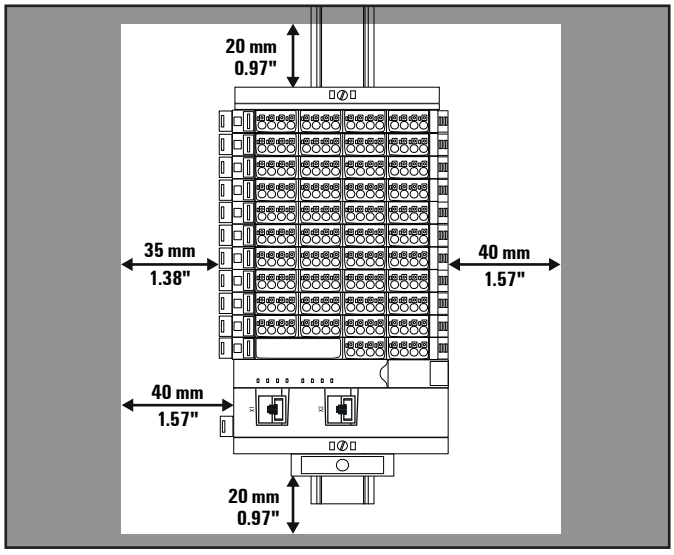

Minimum distances for vertical installation

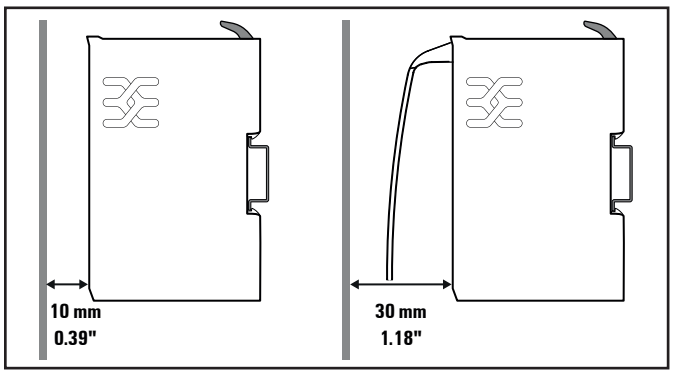

Minimum distance for electrical cabinet door (without/with swivel marker)

Calculation of space requirements

The space requirements for a u-remote station with n modules (**horizontal installation**) is calculated as follows:

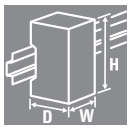

Height: 120 mm (4.72")
+ 2 x 40 mm (1.57") distances at top and bottom
= **200 mm (7.87")**

Width: 8 mm (1.57") end bracket
+ 52 mm (2.05") fieldbus coupler[1)]
+ n x 11.5 mm (0.45") n modules
+ 11.5 mm (0.45") end plate and end bracket
+ 2 x 20 mm (0.79") distances to the sides
= **111.5 mm (4.39") + n x 11.5 mm (0.45")**

1) SL-coupler: 23.0 mm / 0.91"

For **vertical installation** please interchange height and width. When calculating the width, 12.5 mm / 0.49" must be added for the end bracket MEW 35/1 (Order No. 1805610000).

4.4 Use in a potentially explosive atmosphere

Please regard the safety notes in section 2.3.

If the u-remote station is used in a potentially explosive atmosphere rated as Zone 2, the housing must meet the requirements of explosion protection type Ex n or Ex e and degree of protection IP54. Sensors and actuators that are located in Zone 2 or in a safe zone can be connected. All cable glands on the housing must be approved for Ex e.

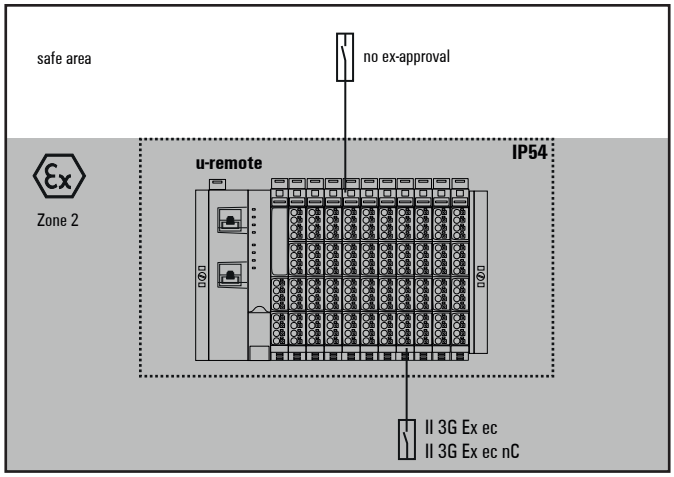

Use in a potentially explosive atmosphere

ATEX marking (internal certification)

Ⓔx II 3 G Ex ec IIC T4 Gc
WI 13ATEX0002 X
Ta: -20 °C ... +60 °C

ATEX/UKEX marking (external certification)

Ⓔx II 3 G Ex ec IIC T4 Gc
DEMKO 15ATEX1525 X
UL21UKEX2094X
Ta: -20 °C ... +60 °C

Ⓔx II 3 G Ex ec nC IIC T4 Gc (relay modules)
DEMKO 15ATEX1525 X
UL21UKEX2094X
Ta: -20 °C ... +60 °C

IECEx marking

Ex ec IIC T4 Gc
IECEx ULD 15.0013X

Ex ec nC IIC T4 Gc (relay modules)
IECEx ULD 15.0013X

Calculation of power loss for the use in a potentially explosive atmosphere

You will find the module specific data needed for calculation in the document "WI13ATEX0002_Power_Calc.pdf" which you can download from the Weidmüller Support Center.

4.5 Use in maritime and offshore applications

You will find a list of u-remote products complying with the requirements of the classification societies DNV, ABS, LR, BV and RINA in the annex. These products are approved for the usage in maritime and offshore applications. The certificates including the particular location classes are available for download from the Weidmüller website.

Please regard the following in the case of maritime or offshore applications:

- The permissible temperature range can be found in the respective certificate.
- For products with maritime approval, a supply voltage range of 24 V DC +30 %/–25 % applies.
- The lower limit for the supply voltage is 18.0 V. For the UR20 modules to function properly, the voltage drop on the current paths must not exceed 0.75 V.

This results in the maximum number of modules that can be lined up without further supply:

Current	Max. number of modules without further feed-in
10 A	11
8 A	15
6 A	22
4 A	35
2.3 A	64

Use of UR20-2PWM-PN-X modules in maritime and offshore applications

When digital pulse width modulation output modules UR20-2PWM-PN-0.5A and UR20-2PWM-PN-2A are used in maritime and offshore applications and an output current greater than 20 mA must be provided by the module or modules, the following requirements must be taken into account:

- Up to a total current of 1 A, a ferrite core must be fitted in the 24 V supply line (type Würth WE-AFB LFS 74277255 or equivalent). Alternatively, the module or modules can be supplied by a Weidmüller power supply unit (AC/DC or DC/DC) with marine approval.
- For a total current greater than 1 A, the module or modules must be supplied by a Weidmüller power supply unit (AC/DC or DC/DC) with marine approval.

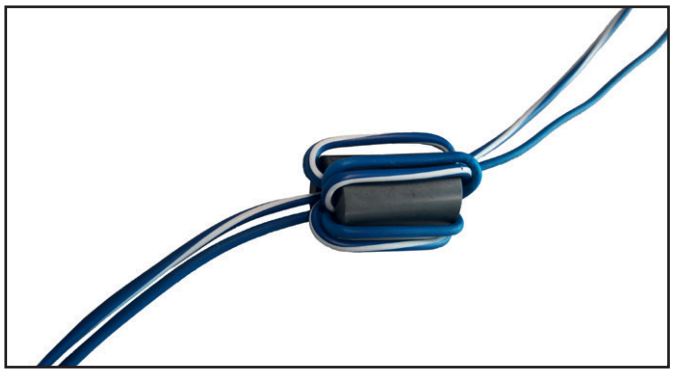

Power supply with ferrit core

Installation with maritime and offshore applications

For vibrations up to a maximum of 0.7*g*:
The UR20 station can be mounted on a 35x7.5 mm or a 37x15 mm DIN rail. Up to 64 UR20 modules can be installed in one UR20 station.

For vibrations above 0.7*g* up to a maximum of 4*g*:
The UR20 station must be mounted on a 35x7.5 mm DIN rail with mounting plate. Up to 50 UR20 modules can be installed in one UR20 station.

4.6 PUSH IN system cabling

u-remote modules (except HD modules) and fieldbus couplers are equipped with the PUSH IN connector system. Single-strand and fine-strand lines with wire-end ferrules can be inserted without the need for a tool. Copper wires with a cross-section measuring between 0.14 mm² and 1.5 mm² can be connected.
We recommend using the following wire-end ferrules:

Cross-section	AWG	Weidmüller Item No. Weidmüller colour code	Weidmüller Item No. DIN colour code
0.14 mm²	26	9028240000	
0.25 mm²	24	9025760000	
0.34 mm²	22	9025770000	
0.50 mm²	20	9025870000	9019020000
0.75 mm²	18	9025860000	9019050000
1.00 mm²	17	9025950000	9019100000
1.50 mm²	16	0635100000	9019130000

Wire-end ferrules for the wiring

The external dimensions of the crimped wire-end ferrules must conform with IEC-60947-1. For crimping, we recommend crimp shape A and the following tools:

- Crimping tool for wire-end ferrules from 0.25 mm² to 1.5 mm² (AWG 24 to 16) with a trapezoidal indentation crimp, type: PZ 6/5 ZERT (Item No. 9017900000)
- Crimping tool for wire-end ferrules from 0.14 mm² to 0.75 mm² (AWG 26 to 18) with a trapezoidal crimp, type: PZ 1.5 ZERT (Item No. 9017310000)

4.7 Current demand and power supply

The u-remote system uses three internal current paths:
The I_{SYS} **system current path** supplies the communication part of the I/O modules; it is fed from the coupler input supply and cannot be interrupted by any module. The maximum current-carrying capacity of I_{SYS} allows a u-remote station to be expanded with a maximum of 64 active modules without having to refresh the power.
The I_{IN} **input current path** supplies the input circuit of the input modules as well as the connected I_S sensors. The current must be refreshed with UR20-PF-I (power feed in) modules as required. These UR20-PF-I modules isolate the input current path towards the left (towards the coupler), and as a result start a new electricity segment towards the right.
The I_{OUT} **output current path** supplies the output circuit of the output modules with power, as well as the connected I_L actuators. The current must be refreshed with the UR20-PF-O (power feed-out), as required. These UR20-PF-O modules isolate the output current path to the left (towards the coupler), and as a result start a new electricity segment to the right.

The design of the power supply being used must take start-up peaks into account.

Power supply derating

The power supply is restricted according to the temperature. The following values apply for the horizontal and vertical positioning of the u-remote station:

Power supply 24 V DC +20 %/-15 %		
Power supply via		
UR20-FBC-PB-DP UR20-FBC-PN-IRT UR20-FBC-EC (< HW 02.00) UR20-FBC-EIP (< HW 02.00) UR20-FBC-MOD-TCP	60 °C (140 °F) / 2 x 8 A 55 °C (131 °F) / 2 x 10 A	55 °C (131 °F) / 2 x 6 A 50 °C (122 °F) / 2 x 8 A
UR20-FBC-PB-DP-V2 UR20-FBC-PN-IRT-V2 UR20-FBC-EC (≥ HW 02.00) UR20-FBC-EIP (≥ HW 02.00) UR20-FBC-EIP-V2 UR20-FBC-MOD-TCP-V2 UR20-FBC-DN UR20-FBC-PL UR20-FBC-CAN UR20-FBC-CC UR20-FBC-CC-TSN	60 °C (140 °F) / 2 x 10 A	55 °C (131 °F) / 2 x 8 A
Power feed module with standard coupler	60 °C (140 °F) / 1 x 10 A	55 °C (131 °F) / 1 x 8 A
UR20-FBC-PN-ECO UR20-FBC-EC-ECO UR20-FBC-MOD-TCP-ECO	50 °C (122 °F) / 1 x 10 A	50 °C (122 °F) / 1 x 8 A 45 °C (113 °F) / 1 x 10 A
Power feed module with ECO coupler	50 °C (122 °F) / 1 x 10 A	50 °C (122 °F) / 1 x 8 A
UR20-FBC-PN-SL-4DIO	50 °C (122 °F) / 1 x 8 A	50 °C (122 °F) / 1 x 8 A
Power feed module with SL-Koppler	50 °C (122 °F) / 1 x 8 A	50 °C (122 °F) / 1 x 8 A

Temperature-dependent values for the power supply

ATTENTION

Equipment may become damaged if improperly rated circuit protection is used!

► In order to achieve spezification according to UL 248-14 use a UL-approved Type-B automatic circuit breaker (e. g. ABB Typ S201-B10) or use a fuse with a maximum of 10 A protection (e. g. ESKA Art. Nr. 522.227).

ATTENTION

Equipment may become damaged by overcurrent!

► Auxiliary supplies as well as signal inputs and outputs may not be used for supplying the station.

Current demand

Product group	Product	I_{SYS}	I_{IN}	I_{OUT}	I_S	I_L
Fieldbus coupler	UR20-FBC-PB-DP, UR20-FBC-PN-IRT-V2, UR20-FBC-PL, UR20-FBC-EIP-V2	100 mA				
	UR20-FBC-PB-DP-V2	90 mA				
	UR20-FBC-PN-IRT	116 mA				
	UR20-FBC-EC	110 mA				
	UR20-FBC-MOD-TCP, UR20-FBC-MOD-TCP-V2, UR20-FBC-EIP, UR20-FBC-IEC61162-450	112 mA				
	UR20-FBC-DN	75 mA	(+ 15 mA from DeviceNet supply)			
	UR20-FBC-CAN	90 mA				
	UR20-FBC-CC	75 mA				
	UR20-FBC-CC-TSN	140 mA				
	UR20-FBC-PN-ECO, UR20-FBC-EC-ECO, UR20-FBC-MOD-TCP-ECO	80 mA				
	UR20-FBC-PN-SL-4DIO	50 mA, typ. without I/Os				
Digital input modules	UR20-4DI-P, UR20-4DI-N, UR20-4DI-P-3W	8 mA	6 mA / 18 mA[1)]		x	
	UR20-4DI-2W-230V-AC	8 mA	–			
	UR20-8DI-P-2W, UR20-8DI-P-3W, UR20-8DI-P-3W-HD, UR20-8DI-N-3W	8 mA	8 mA / 30 mA[1)]		x	
	UR20-8DI-ISO-2W	8 mA	–			
	UR20-16DI-P, UR20-16DI-N	8 mA	8 mA / 52 mA[1)]		x	
	UR20-16DI-P-PLC-INT, UR20-16DI-N-PLC-INT	8 mA	10 mA / 54 mA[1)]		x	
	UR20-2DI-P-TS	8 mA	6 mA / 12 mA[1)]		x	
	UR20-4DI-P-TS	8 mA	6 mA / 18 mA[1)]		x	
Digital input and output module	UR20-8DIO-P-3W-DIAG	8 mA		34 mA	x	x
Digital output modules	UR20-4DO-P, UR20-4DO-PN-2A, UR20-4DO-N	8 mA		20 mA		x
	UR20-4DO-P-2A, UR20-4DO-N-2A	8 mA		25 mA		x
	UR20-8DO-P, UR20-8DO-N	8 mA		35 mA		x
	UR20-8DO-P-2W-HD	8 mA		35 mA		x
	UR20-16DO-P, UR20-16DO-P-PLC-INT, UR20-16DO-N, UR20-16DO-N-PLC-INT	8 mA		25 mA		x
	UR20-4DO-ISO-4A	8 mA		< 46 mA		x
	UR20-4RO-SSR-255	11 mA				
	UR20-4RO-CO-255	8 mA		20 mA		
Stepper motor module	UR20-1SM-50W-6DI2DO-P	8 mA	27 mA	10 mA	x	x

I_{SYS} Current consumption from the system current path
I_{IN} Power consumption from input current path
I_{OUT} Power consumption from output current path at maximum load
1) all inputs active

I_S Current demand of the connected sensors
I_L Current demand of the connected actuators
x Must be included when calculating the power supply

Current demand

Product group	Product	I_{SYS}	I_{IN}	I_{OUT}	I_S	I_L
Analogue input modules	UR20-2AI-UI-16, UR20-2AI-UI-16-DIAG, UR20-4AI-UI-16, UR20-4AI-UI-16-DIAG, UR20-4AI-UI-16-HD, UR20-4AI-UI-16-DIAG-HD, UR20-4AI-UI-12	8 mA	25 mA		x	
	UR20-4AI-I-HART-16-DIAG	8 mA	27 mA		x	
	UR20-4AI-TC-DIAG, UR20-4AI-TC-CJT-DIAG, UR20-4AI-RTD-DIAG, UR20-4AI-RTD-HP-DIAG	8 mA	20 mA			
	UR20-8AI-I-16-DIAG	8 mA	23 mA			x
	UR20-8AI-I-16-HD, UR20-8AI-I-16-DIAG-HD, UR20-8AI-I-PLC-INT, UR20-8AI-RTD-DIAG-2W	8 mA	20 mA			
	UR20-4AI-UI-DIF-32-DIAG	8 mA	31 mA			x
	UR20-4AI-UI-ISO-16-DIAG	8 mA	31 mA			
	UR20-4AI-UI-DIF-16-DIAG	8 mA	33 mA		x	
	UR20-4AI-R-HS-16-DIAG	8 mA	26 mA			
	UR20-4AI-I-HART-ISO-16	8 mA	32 mA			
	UR20-15AI-U-16-DIAG	6 mA	18,8 mA			x
	UR20-2AI-SG-24-DIAG	8 mA	< 35 mA (75 mA on nominal load)			
	UR20-3EM-230V-AC	8 mA	≤ 40 mA			
Analogue output modules	UR20-2AO-UI-16, UR20-2AO-UI-16-DIAG	8 mA		56 mA		
	UR20-2AO-UI-ISO-16-DIAG	8 mA		80 mA		
	UR20-4AO-UI-16, UR20-4AO-UI-16-M, UR20-4AO-UI-16-DIAG, UR20-4AO-UI-16-M-DIAG	8 mA		85 mA		
	UR20-4AO-UI-16-HD, UR20-4AO-UI-16-DIAG-HD	8 mA		85 mA		
Functional modules	UR20-1CNT-100-1DO	8 mA	35 mA			x
	UR20-2CNT-100	8 mA	35 mA			
	UR20-1CNT-500	8 mA	20 mA		x	
	UR20-2FCNT-100	8 mA	35 mA		x	
	UR20-2PWM-PN-0.5A, UR20-2PWM-PN-2A	8 mA		40 mA		x
	UR20-2PWM-I-2.5A-2DI-P	9 mA		25 mA		x
	UR20-1SSI	8 mA	25 mA		x	
	UR20-1COM-232-485-422, UR20-1COM-232-485-422-V2	8 mA	16 mA			
	UR20-1COM-SAI-PRO	8 mA	17 mA	plus SAI supply current		
	UR20-1COM-SAI-PRO-V2	8 mA	17 mA	plus SAI supply current		
	UR20-1COM-CANOPEN	8 mA	30 mA			
	UR20-4COM-IO-LINK, UR20-4COM-IO-LINK-V2	8 mA	25 mA		x	
Safe I/O modules	UR20-4DI-4DO-PN-FSOE, UR20-4DI-4DO-PN-FSPS, UR20-4DI-4DO-PN-FSCC	8 mA		20 mA	x	
	UR20-8DI-PN-FSOE, UR20-8DI-PN-FSPS, UR20-8DI-PN-FSCC	8 mA	20 mA		x	
Power-feed modules	UR20-PF-O			10 mA		
	UR20-PF-I		10 mA			
	UR20-PF-O-1DI-SIL, UR20-PF-O-2DI-SIL, UR20-PF-O-2DI-DELAY-SIL	8 mA	45 mA			x

I_{SYS} Current consumption from the system current path
I_{IN} Power consumption from input current path
I_{OUT} Power consumption from output current path at maximum load
1) all inputs active

I_S Current demand of the connected sensors
I_L Current demand of the connected actuators
x Must be included when calculating the power supply

4.8 Example calculation for the power supply

The power supply must be calculated individually for each station installation. Therefore the simultaneity factor g and the current demand of each module, as well as the devices to be connected must be established (see the example calculation table).

In the **example station**, a PROFINET-IRT coupler is configured with four UR20-4DI-P modules and eight UR20-8DO-P modules. The cumulative current demand for each module is now calculated to determine whether and at which point a UR20-PF-I power-feed module must be positioned to refresh the current path. A power-feed module must always be used where the current demand exceeds 10 A.



The power refresh must be separately calculated for the input and output current paths. The system voltage need not be considered during this step.

Calculation of the current demand for the input current

The current consumption of the fieldbus coupler must be considered for the **main power supply**, and the sum of consumption values is multiplied by the simultaneity factor g for each following module:

I_{SYS} coupler
+ (I_{SYS} + I_{IN}) + (I_S x g) module 1
+ (I_{SYS} + I_{IN}) + (I_S x g) module 2
+ $\sum$ ((I_{SYS} + I_{IN}) + (I_S x g)) modules 3 to 4
= Cumulative current demand

I_{SYS} Current consumption from the system current path
I_{IN} Current consumption from the input current path
I_S Power supplies for the connected sensors

In the case of an additional power supply (**power refresh**) with a UR20-PF-I power-feed module, only the sensor power supplies and the module current consumption have to be considered:

((I_{IN} + I_S module x) x g)
+ ((I_{IN} + I_S module y) x g)
+ $\sum$ ((I_{IN} + I_S) x g) n modules
= Cumulative current demand

Calculation of current demand for the output current

The current consumption of each module and the current demand of the connected actuators must be considered for the output current. There is no difference in the calculation of the main power supply and power refresh:

(I_{OUT} + (I_L x g) module 1
+ (I_{OUT} + (I_L x g) module 2
+ $\sum$ (I_{OUT} + (I_L x g)) n modules
= Cumulative current demand

I_{OUT} module current consumption from the output current path
I_L Current demand of the connected actuators

Example:
The values in the following table are used to calculate the current demand of the example station (cumulative for each module). The input current is:
Module 1:
I = 0.116 A + (0.008 A + 0.012 A) + (0.06 A x 1) = 0.196 A

Module 2:
I = 0.196 A + (0.008 A + 0.012 A) + (0.06 A x 1) = 0.276 A

The values for the other modules are calculated accordingly. The result shows that the accumulated value for up to 12 modules remains under 10 A, and therefore a power-feed module need not be used for the input current path.
Results for the output current path:
Module 5:
I = 0.015 A + (2 A x 0.5) = 1.015 A

Modul6 6:
I = 1.015 A + (0.015 A + (4 A x 0.5) = 3.03 A

Module 10:
I = 6.175 A + (0.015 A + (4 A x 0.5) = 8.19 A

Module 11 (without power refresh):
I = 8.19 A + (0.015 A + (4 A x 0.5) = **10.205 A**

Therefore the available 10 A would be exceeded. As a result, a PF-O power-feed module must be positioned e 11th module, which will supply anocalculation of current consumption is repeated for each power-feed module. Unused current values may not be included.

Module 11 (as per PF-O):
I = (0.015 A + (4 A x 0.5) = 2.015 A

Module 12 (as per PF-O):
I = 2.015 A (0.015 A + (4 A x 0.5) = 4.030 A

Example calculation for the current demand (all current values in A)

Module no.	Product	I_{SYS}	I_{IN}	I_{OUT}	I_S	I_L	Simultaneity factor g	Cumulative current demands of the input current path	Cumulative current demand of the output power path coupler	Cumulative current demand of the PF-O output power path
	UR20-FBC-PN-IRT	0.116						0.116	0	
1	UR20-4DI-P	0.008	0.012		0.06		1	0.196	0	
2	UR20-4DI-P	0.008	0.012		0.06		1	0.276	0	
3	UR20-4DI-P	0.008	0.012		0.12		1	0.416	0	
4	UR20-4DI-P	0.008	0.012		0.18		1	0.616	0	
5	UR20-8DO-P	0.008		0.015		2	0.5	0.624	1.015	
6	UR20-8DO-P	0.008		0.015		4	0.5	0.632	3.03	
7	UR20-8DO-P	0.008		0.015		3	0.5	0.64	4.545	
8	UR20-8DO-P	0.008		0.015		2	0.5	0.648	5.56	
9	UR20-8DO-P	0.008		0.015		1.2	0.5	0.656	6.175	
10	UR20-8DO-P	0.008		0.015		4	0.5	0.664	**8.19**	
	UR20-PF-O									
11	UR20-8DO-P	0.008		0.015		4	0.5	0.672		2.015
12	UR20-8DO-P	0.008		0.015		4	0.5	0.68		4.030

I_{SYS} Current consumption from the system power supply
I_{IN} Power consumption from input current path
I_{OUT} Power consumption from output current path
I_S Current demand of the connected sensors
I_L Current demand of the connected actuators

The current demand is just under 10 A! The output current path must therefore be refreshed **before the 11th module**.

10 A is supplied by the UR20-PF-O module. The 1.81 A calculated as remaining after the 10th module must **not** be added to the 10 A after the UR20-PF-O module!

4.9 Calculation of power loss

The power loss of the fieldbus coupler is calculated als follows:

$$P_{coupler} = P_0 + N * P_{mod} + I_{in} * \Delta U_{in} + I_{out} * \Delta U_{out}$$

$$P_{coupler} = P_0 + N * P_{mod} + I_{in} * \Delta U_{in} + I_{out} * \Delta U_{out}$$

P_0	Static power loss in the fieldbus coupler	24 V * I_{SYS}
I_{SYS}	Current consumption from the system current path	See table "Current demand" in section 4.7
N	Number of modules	
P_{mod}	Power loss due to module supply from the system current path	0.02 W
I_{in}	Current fed in through the input current path	
ΔU_{in}	Voltage drop across the contacts in the input current path	0.18 V
I_{out}	Current fed in through the output current path	
ΔU_{out}	Voltage drop across the contacts in the output current path	0.18 V

The power loss of a u-remote station is calculated using the power loss of the fieldbus coupler and the power loss of the individual modules. It depends on the current in both current paths. It is assumed that there is a maximum power loss (P_{module}) of 0.02 watts for the modules.

$$P_{station} = P_{koppler} + N * P_{module}$$

Maximum values were assumed for these calculations. If you need detailed calculations, please contact the Weidmüller Service.

Calculation of power loss for the use in a potentially explosive atmosphere

You will find the module specific data needed for calculation in the document "WI13ATEX0002_Power_Calc.pdf" which you can download from the Weidmüller Support Center.

4.10 Feedback energy in DO modules

With digital output modules, power is fed back through the channels when inductive loads are switched off. The respective permissible breaking energy is noted in the technical data of the DO modules. Depending on the switching frequency the breaking energy leads to additional energy loss in the output module.

If the maximum permissible output power loss of a module is exceeded, the module shuts down temporarily.

Feedback energy can be prevented by installing external freewheeling protection. With it, the same switching rate can be achieved with an inductive load as with a resistive load.

4.11 Frequency suppression filter in AI modules

For analogue input modules, the effect of interfering frequencies can be attenuated using the **frequency suppression** module parameter. The selectable options are described below.

50 Hz / 60 Hz

The frequency of the used AC voltage network can interfere with the analogue input measuring channels. The parameterisable filters suppress these affections. Select the frequency value that is predominant in your AC voltage network

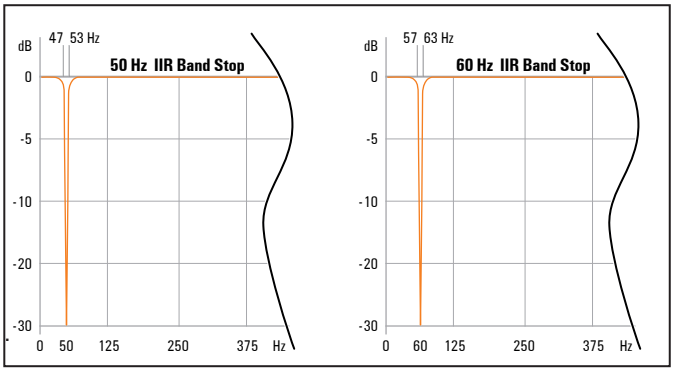

2 Hz low pass

This filter attenuates signals with frequencies above 2 Hz, whereas signals with frequencies below 2 Hz can pass through.

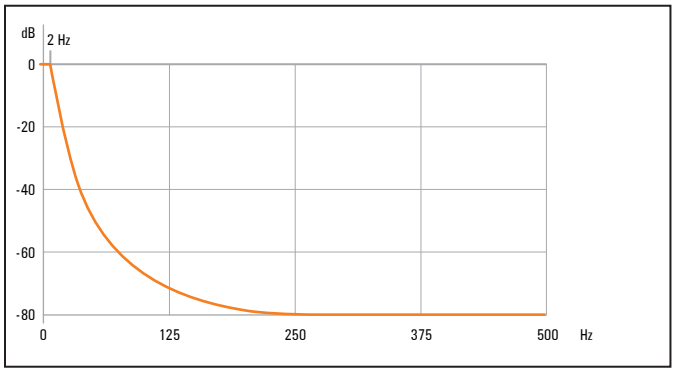

Average over 16 values

This filter calculates the sum of 16 values and divide it by 16. In each subseuent measuring cycle, the oldest value is discarded and the newest value is added.

When using this filter, sporadic peaks that may be caused by EMC will not take to much affect to the entire measurement.

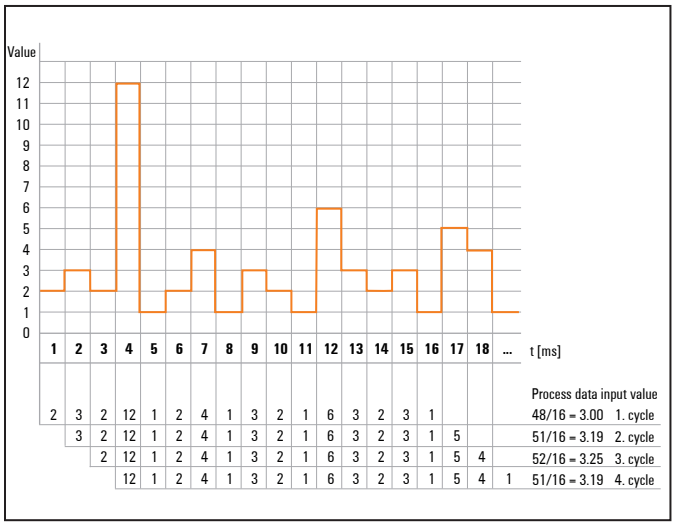

5 Detailed descriptions of the fieldbus couplers

5.1 PROFIBUS fieldbus coupler

The UR20-FBC-PB-DP or UR20-FBC-PB-DP-V2 fieldbus coupler is a PROFIBUS-DP participant certified by the PROFIBUS user organisation. The coupler is the head module for the u-remote system bus, to which up to 64 active u-remote modules can be connected. The PROFIBUS-DP coupler has a Sub-D socket and supports all services in accordance with the DP-V1 specification.

The coupler can be accessed with a system-independent web server application via the USB service interface. Thus, all information, such as diagnostics, status values and parameters, can be read and all connected modules can be simulated or forced.

The station's main power supply is integrated in the coupler. Power is supplied via two 4-pole connectors, separated into the input and output current paths.

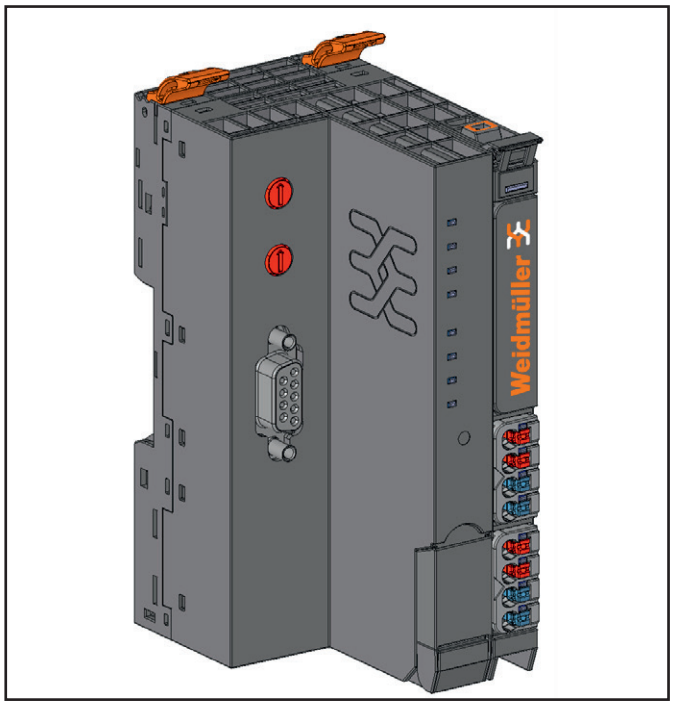

Fieldbus coupler UR20-FBC-PB-DP (Item No. 1334870000), UR20-FBC-PB-DP-V2 (Item No. 2614380000)

Status indicators

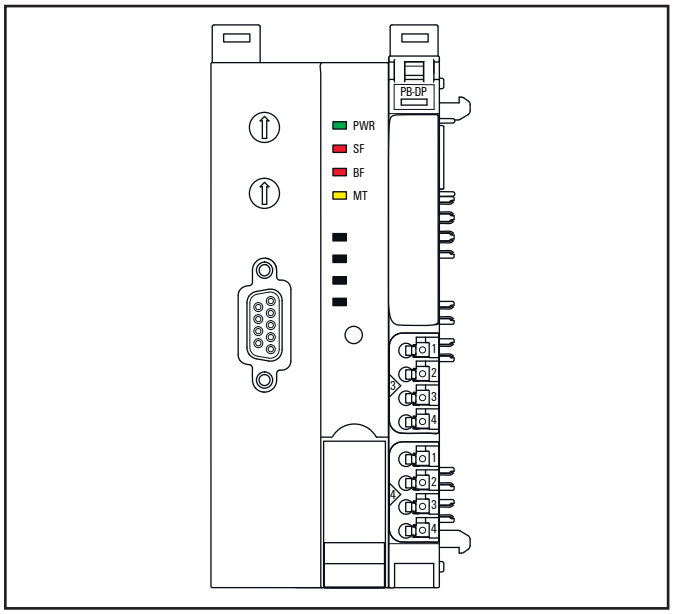

LED status indicators UR20-FBC-PB-DP, UR20-FBC-PB-DP-V2, troubleshooting see Chapter 12

PWR	Power LED	**Green**: Supply voltage connected **Red:** Coupler not yet started completely or hardware error
SF	Collective error	**Red:** Configuration error, or error in the coupler, or error in a module, or there is a new diagnostic message **Red flashing**: Station in Force mode
BF	Bus failure	**Red:** No connection to the fieldbus **Red flashing**: Configuration error, no connection to the control unit, or error in the parameter set or slave address error or firmware update is running
MT	Maintenance	**Yellow**: Error on the system bus or fieldbus

Addressing

The fieldbus coupler on the PROFIBUS-DP is addressed via the two rotary switches.

A maximum of 125 addresses (1 to 125) can be assigned. Each address may be assigned only **once** in the overall bus structure.
Addresses 1 and 2 are generally used by the control systems. Bus addresses 000 plus 126 and higher may not be used!

The high order digit is set with rotary switch **H**, the least significant digit with rotary switch **L** . The switches are labelled in the hexadecimal numbering system (0 to 9, A=10, B=11, C=12, ... F = 15). A decimal to hexadecimal conversion table is provided in the annex.

Coding: Address = (H*16) + L

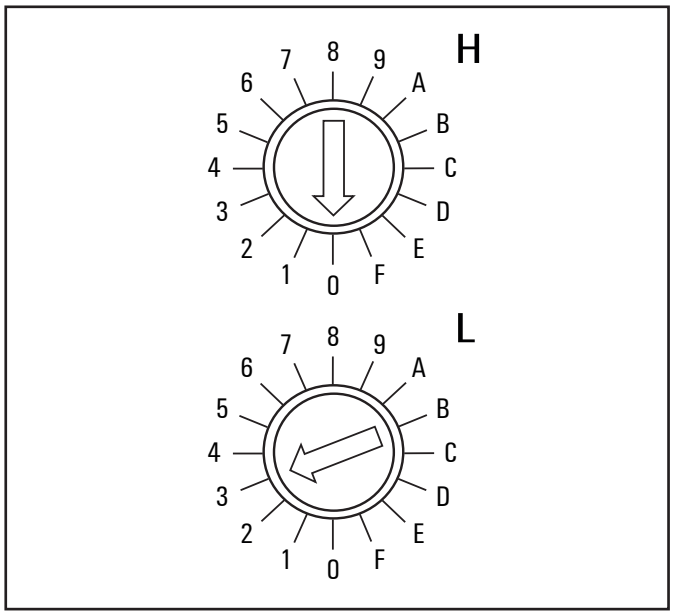

Default setting: Address = 3

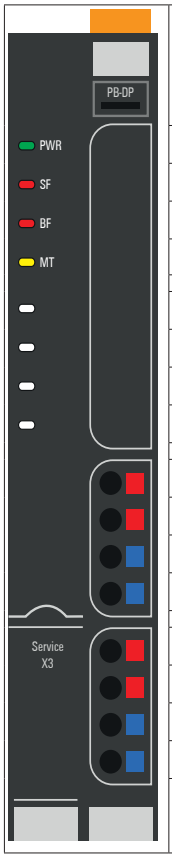

	Coupler power supply LED green: supply voltage >18 V red: at least one current path <18 V
3.1	Green: Input current path supply voltage > 18 V DC
3.2	Red: Input current path supply voltage < 18 V DC
3.4	Red: Internal fuse defective
4.1	Green: Output current path supply voltage > 18 V DC
4.2	Red: Output current path supply voltage < 18 V DC
4.4	Red: Internal fuse defective

LED indicators UR20-FBC-PB-DP, UR20-FBC-PB-DP-V2, troubleshooting see Chapter 12

Addressing examples:

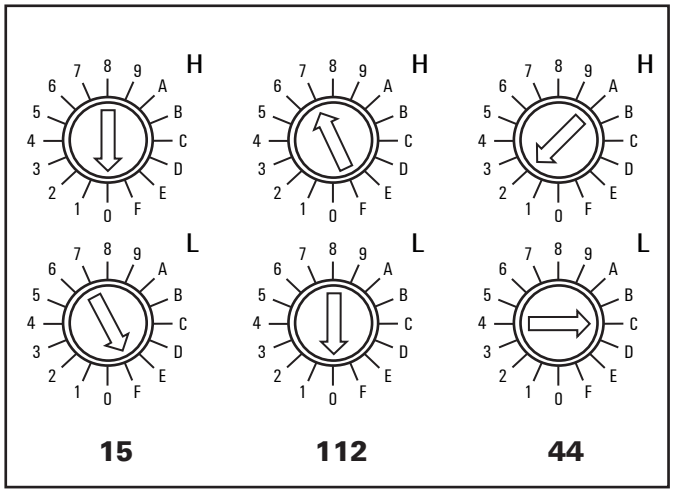

Addressing examples

PROFIBUS address **15**: H = 0, L = F
PROFIBUS address **112**: H = 7, L = 0
PROFIBUS address **44**: H = 2, L = C

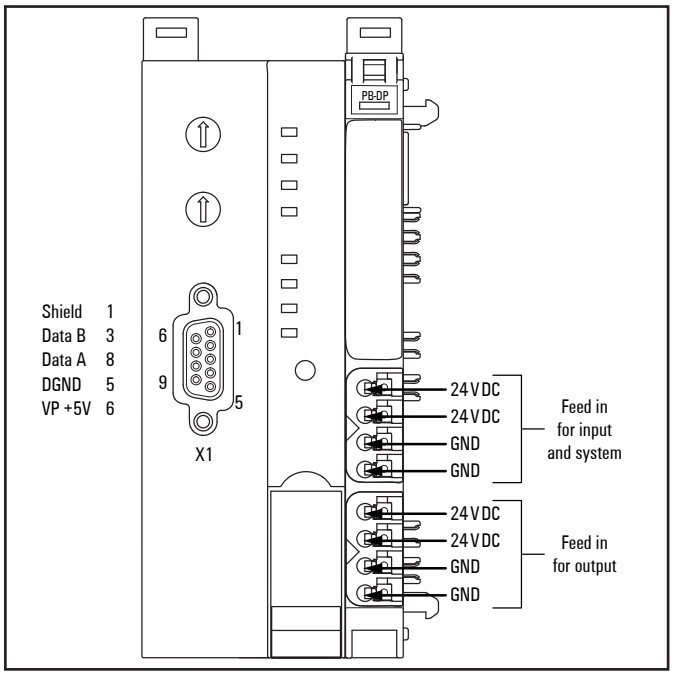

Connection diagram UR20-FBC-PB-DP, UR20-FBC-PB-DP-V2

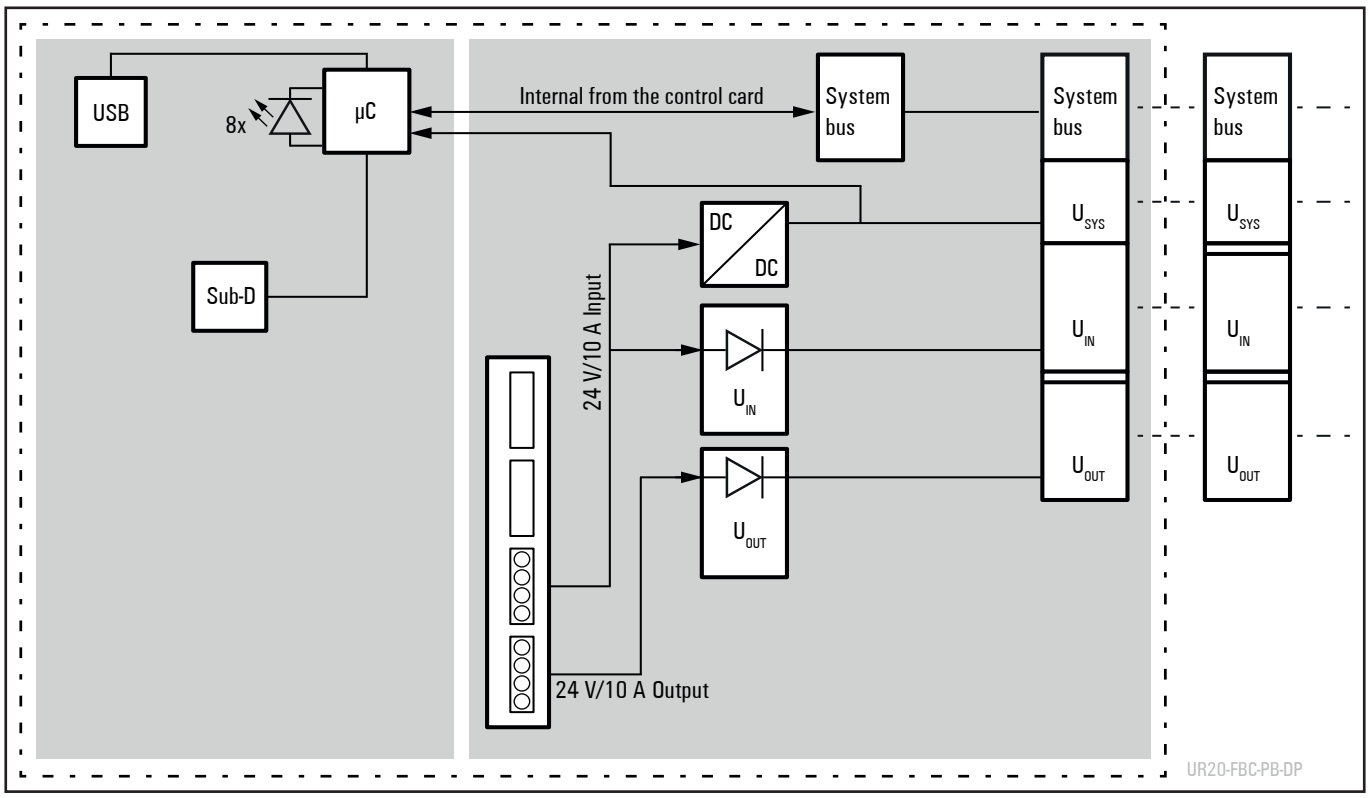

Block diagram UR20-FBC-PB-DP, UR20-FBC-PB-DP-V2

ATTENTION

Risk of material damage!

In the case of a maximum power supply of >8 A and a maximum temperature of >+55 °C, all four contacts must be connected with 1.5 mm² wiring!

Technical data UR20-FBC-PB-DP (Item No. 1334870000), UR20-FBC-PB-DP-V2 (Item No. 2614380000)

System data		
Connection	9-pole SUB-D socket	
Fieldbus protocol	PROFIBUS DP-V1	
Input data width	max. 244 Byte	
Output data width	max. 244 Byte	
Parameter data	max. 244 Byte	
Diagnostic data	max. 244 Byte	
Number of modules	max. 64 active	
Configuration interface	Micro USB 2.0	
Transfer rate	Fieldbus	max. 12 Mbps
	u-remote system bus	max. 48 Mbps
Supply		
Supply voltage for system and inputs	24 V DC +20 % / -15 %	
Supply voltage for outputs	24 V DC +20 % / -15 %	
Feed-in current for input modules[1)]	max. 10 A	
Feed-in current for output modules[1)]	max. 10 A	
Current consumption from system current path I_{SYS}	UR20-FBC-PB-DP: 100 mA, UR20-FBC-PB-DP-V2: 90 mA	
Temperature data[1)]		
UR20-FBC-PB-DP	Operation (horizontal installation)	-20 °C to +60 °C / -4 °F ... +140 °F (2 x 8 A power supply) -20 °C to +55 °C / -4 °F ... +131 °F (2 x 10 A power supply)
	Operation (vertical installation)	-20 °C to +55 °C / -4 °F ... +131 °F (2 x 6 A power supply) -20 °C to +50 °C / -4 °F ... +122 °F (2 x 8 A power supply)
UR20-FBC-PB-DP-V2	Operation (horizontal installation)	-20 °C to +60 °C / -4 °F ... +140 °F (2 x 10 A power supply)
	Operation (vertical installation)	-20 °C to +55 °C / -4 °F ... +131 °F (2 x 8 A power supply)
	Storage, transport	-40 °C to +85 °C / -40 °F ... +185 °F
Connection data		
Type of connection	"PUSH IN"	
Conductor cross-section	Single-wired, fine-wired	0.14 ... 1.5 mm² (AWG 26 ... 16)
Weight		
Weight (operational status)	223 g	
General data, see Section 3.2		

1) Restrictions for the use in potentially explosive atmosphere:
- Only horizontal installation
- Max. 8 A power supply for fieldbus coupler <HW 02.00.00

Overview of editable parameters UR20-FBC-PB-DP, UR20-FBC-PB-DP-V2

Parameter	Additional explanations	Optional values	Default
IP address USB port[1)]		192.168.1.202, 192.168.2.202, 192.168.3.202 ... 192.168.20.202	192.168.1.202
DP alarm mode		V0 / V1	V1
DP alarm mode V0	**For mode V0, the alarm triggers are set in the parameter data.**		
Diagnostic alarm	These switches are always selectable, but they only have a function in mode V0. Diagnostic messages are generated which are not acknowledged by the PLC.	enabled / disabled	enabled
Process alarm		enabled / disabled	enabled
Hot-plug alarm		enabled / disabled	disabled
DP alarm mode V1	**In mode V1, the alarm triggers are set in the engineering environment.**		
Diagnostic alarm	These switches can be selected only in mode V1, in V0 they are inactive. Diagnostic messages are generated which are acknowledged by the PLC.	enabled / disabled	enabled
Process alarm		enabled / disabled	enabled
Hot-plug alarm		enabled / disabled	disabled
Identifier-related diagnosis	A diagnostic block is attached to the diagnostic message.	enabled / disabled	enabled
Channel-related diagnosis	A diagnostic block is attached to the diagnostic message.	enabled / disabled	enabled
Module status	A diagnostic block is attached to the diagnostic message.	enabled / disabled	enabled
Data format		Motorola / Intel	Motorola
Output behaviour on fieldbus error		All outputs off / Enable substitute value / Hold last value	All outputs off
Module behaviour on hot swap		Continue data exchange / behaviour as with fieldbus error	Continue data exchange

1) Change requires restart of the fieldbus coupler.

Reading diagnostic data

The last diagnostic telegram reported by the respective module can be read out from a slot via the acyclic services (ReadRecord). The diagnostic data are listed in the respective module description (see chapter 6).
The following diagnostic data are available:

Index 0	the first 4 Byte
Index 1	47 Byte (the complete string)

Coupler-dependent data width of I/O modules UR20-FBC-PB-DP, UR20-FBC-PB-DP-V2

Item No.	Module	Configuration	Parameters	Diagnostics	Process data	
					Input	Output
		Bytes	Bytes	Bytes	Bytes	Bytes
1334870000	UR20-FBC-PB-DP	–	8	47	–	–
2614380000	UR20-FBC-PB-DP-V2	–	8	47	–	–
1315170000	UR20-4DI-P[1)]	3	7/3[2)]	47	1	–
2009360000	UR20-4DI-P-3W[1)]	3	7/3[2)]	47	1	–
1315180000	UR20-8DI-P-2W	3	11/3[2)]	47	1	–
1394400000	UR20-8DI-P-3W	3	11/3[2)]	47	1	–
1315190000	UR20-8DI-P-3W-HD	3	11/3[2)]	47	1	–
1315200000	UR20-16DI-P	3	–	47	2	–
1315210000	UR20-16DI-P-PLC-INT	3	–	47	2	–
1460140000	UR20-2DI-P-TS	3	9	47	60	–
1460150000	UR20-4DI-P-TS	3	11	47	60	–
1315350000	UR20-4DI-N[1)]	3	7/3[2)]	47	1	–
1315370000	UR20-8DI-N-3W	3	11/3[2)]	47	1	–
1315390000	UR20-16DI-N	3	–	47	2	–
1315400000	UR20-16DI-N-PLC-INT	3	–	47	2	–
1550070000	UR20-4DI-2W-230V-AC[1)]	3	–	47	1	–
2457240000	UR20-8DI-ISO-2W	3	11/3[2)]	47	1	–
1315220000	UR20-4DO-P[1)]	3	4/3[2)]	47	–	1
1315230000	UR20-4DO-P-2A[1)]	3	4/3[2)]	47	–	1
1394420000	UR20-4DO-PN-2A	3	4	47	–	1
1315240000	UR20-8DO-P	3	4/3[2)]	47	–	1
1509830000	UR20-8DO-P-2W-HD	3	4/3[2)]	47	–	1
1315250000	UR20-16DO-P	3	–	47	–	2
1315270000	UR20-16DO-P-PLC-INT	3	–	47	–	2
1315410000	UR20-4DO-N[1)]	3	4/3[2)]	47	–	1
1315420000	UR20-4DO-N-2A[1)]	3	4/3[2)]	47	–	1
1315430000	UR20-8DO-N	3	4/3[2)]	47	–	1
1315440000	UR20-16DO-N	3	–	47	–	2
1315450000	UR20-16DO-N-PLC-INT	3	–	47	–	2
2457250000	UR20-4DO-ISO-4A[1)]	3	4/3[2)]	47	–	1
2456530000	UR20-8DIO-P-3W-DIAG	3	11	47	1	1
1315540000	UR20-4RO-SSR-255[1)]	3	4/3[2)]	47	–	1
1315550000	UR20-4RO-CO-255[1)]	3	4/3[2)]	47	–	1
1315600000	UR20-2PWM-PN-0.5A	3	11	47	4	12
3036960000	UR20-2PWM-PN-0.5A-V2	3	11	47	4	12
1315610000	UR20-2PWM-PN-2A	3	11	47	4	12
3036950000	UR20-2PWM-PN-2A-V2	3	11	47	4	12

1) Also available as follower module, recognisable in the device description file by ... before the module name. Can follow another supported module and then occupies one byte less in the process data (input 0 and output 0).
2) Modules with /3, such as UR20-8DO-P-NoParam, are present in the GSD and then have 3 Bytes parameters.
3) See manual for UR20-4COM-IO-LINK communication module
4) Input process data and output process data must have the same value.

Coupler-dependent data width of I/O modules UR20-FBC-PB-DP, UR20-FBC-PB-DP-V2

Item No.	Module	Configuration	Parameters	Diagnostics	Process data	
					Input	Output
		Bytes	Bytes	Bytes	Bytes	Bytes
269791000	UR20-2PWM-I-2.5A-2DI-P	3	67	47	8	6
2489830000	UR20-1SM-50W-6DI2DO-P	3	24	47	16	16
2705620000	UR20-2AI-UI-16	3	7	47	4	–
2566090000	UR20-2AI-UI-16-DIAG	3	9	47	4	–
1315620000	UR20-4AI-UI-16	3	9	47	8	–
1315690000	UR20-4AI-UI-16-DIAG	3	11	47	8	–
1993880000	UR20-4AI-UI-DIF-16-DIAG	3	11	47	8	–
2544660000	UR20-4AI-UI-DIF-32-DIAG	3	43	47	16	–
2566960000	UR20-4AI-UI-ISO-16-DIAG	3	26	47	8	–
1506920000	UR20-4AI-UI-16-HD	3	9	47	8	–
1506910000	UR20-4AI-UI-16-DIAG-HD	3	11	47	8	–
1394390000	UR20-4AI-UI-12	3	9	47	8	–
1529370000	UR20-8AI-I-16-DIAG	3	14	47	16	–
1315650000	UR20-8AI-I-16-HD	3	13	47	16	–
1315720000	UR20-8AI-I-16-DIAG-HD	3	15	47	16	–
1315670000	UR20-8AI-I-PLC-INT	3	13	47	16	–
1315700000	UR20-4AI-RTD-DIAG	3	31	47	8	–
2456540000	UR20-4AI-RTD-HP-DIAG	3	47	47	8	–
1315710000	UR20-4AI-TC-DIAG	3	31	47	8	–
2001670000	UR20-4AI-R-HS-16-DIAG	3	66	47	8	–
2828350000	UR20-4AI-I-HART-ISO-16	3	12	47	16	16
2555940000	UR20-8AI-RTD-DIAG-2W	3	13	47	16	–
3039320000	UR20-15AI-U-16-DIAG	3	27	47	9	1
1990070000	UR20-2AI-SG-24-DIAG	3	29	47	16	16
2007420000	UR20-3EM-230V-AC	3	30	47	16	16
2920830000	UR20-3EM-400V-AC-CT1A	3	43	47	32	8
2920840000	UR20-3EM-400V-AC-CT5A	3	43	47	32	8
2920850000	UR20-3EM-400V-AC-RC	3	43	47	32	8
2920860000	UR20-3EM-400V-AC-333mV	3	43	47	32	8
2705630000	UR20-2AO-UI-16	3	9	47	–	4
2566100000	UR20-2AO-UI-16-DIAG	3	10	47	–	4
2566970000	UR20-2AO-UI-ISO-16-DIAG	3	17	47	–	4
1315680000	UR20-4AO-UI-16	3	15	47	–	8
2453880000	UR20-4AO-UI-16-M	3	15	47	–	8
1315730000	UR20-4AO-UI-16-DIAG	3	16	47	–	8
2453870000	UR20-4AO-UI-16-M-DIAG	3	16	47	–	8

1) Also available as follower module, recognisable in the device description file by ... before the module name. Can follow another supported module and then occupies one byte less in the process data (input 0 and output 0).
2) Modules with /3, such as UR20-8DO-P-NoParam, are present in the GSD and then have 3 Bytes parameters.
3) See manual for UR20-4COM-IO-LINK communication module
4) Input process data and output process data must have the same value.

Coupler-dependent data width of I/O modules UR20-FBC-PB-DP, UR20-FBC-PB-DP-V2

Item No.	Module	Configuration	Parameters	Diagnostics	Process data	
					Input	Output
		Bytes	Bytes	Bytes	Bytes	Bytes
1510690000	UR20-4AO-UI-16-HD	3	15	47	–	8
1506930000	UR20-4AO-UI-16-DIAG-HD	3	16	47	–	8
1315570000	UR20-1CNT-100-1DO	3	24	47	12	10
1315590000	UR20-2CNT-100	3	43	47	12	12
1315580000	UR20-1CNT-500	3	24	47	8	10
1508080000	UR20-2FCNT-100	3	5	47	20	12
1508090000	UR20-1SSI	3	11	47	6	0
1315750000	UR20-1COM-232-485-422	3	9	47	16	16
2826800000	UR20-1COM-232-485-422-V2	3	36	47	19	19
2007430000	UR20-1COM-SAI-PRO	3	–	47	–	–
3116480000	UR20-1COM-SAI-PRO-V2	3	–	47	–	–
2489840000	UR20-1COM-CANOPEN	3	40	47	18, 26, 34, 50, 64 [4]	18, 26, 34, 50, 64 [4]
3040800000	UR20-1COM-CAN	3	39	47	15, 28, 42, 62 [4]	15, 28, 42, 62 [4]
1315740000	UR20-4COM-IO-LINK	3	29	47	[3]	[3]
2819690000	UR20-4COM-IO-LINK-V2	3	29	47	[3]	[3]
1529780000	UR20-4DI-4DO-PN-FSOE	–	–	–	–	–
1529800000	UR20-8DI-PN-FSOE	–	–	–	–	–
1335060000	UR20-4DI-4DO-PN-FSPS	7	26	47	5	5
1335070000	UR20-8DI-PN-FSPS	7	26	47	5	5
1335030000	UR20-PF-O-1DI-SIL	3	–	47	4	–
1335040000	UR20-PF-O-2DI-DELAY-SIL	3	–	47	4	–
1335050000	UR20-PF-O-2DI-SIL	3	–	47	4	–
Max. data (in bytes)		244	244	244	244	244

1) Also available as follower module, recognisable in the device description file by ... before the module name. Can follow another supported module and then occupies one byte less in the process data (input 0 and output 0).
2) Modules with /3, such as UR20-8DO-P-NoParam, are present in the GSD and then have 3 Bytes parameters.
3) See manual for UR20-4COM-IO-LINK communication module
4) Input process data and output process data must have the same value.

5.2 PROFINET fieldbus coupler

The UR20-FBC-PN-IRT or UR20-FBC-PN-IRT-V2 fieldbus coupler is a PROFINET I/O participant certified by the PROFINET user organisation. The coupler is the head module for the u-remote system bus, to which up to 64 active u-remote modules can be connected. The PROFINET coupler has two Ethernet ports, and the integrated switch supports a line network structure.

The coupler can be accessed with a system-independent web server application via the USB service interface or the Ethernet. Thus, all information, such as diagnostics, status values and parameters, can be read and all connected modules can be simulated or forced.

The station's main power supply is integrated in the coupler. Power is supplied via two 4-pole connectors, separated into the input and output current paths.

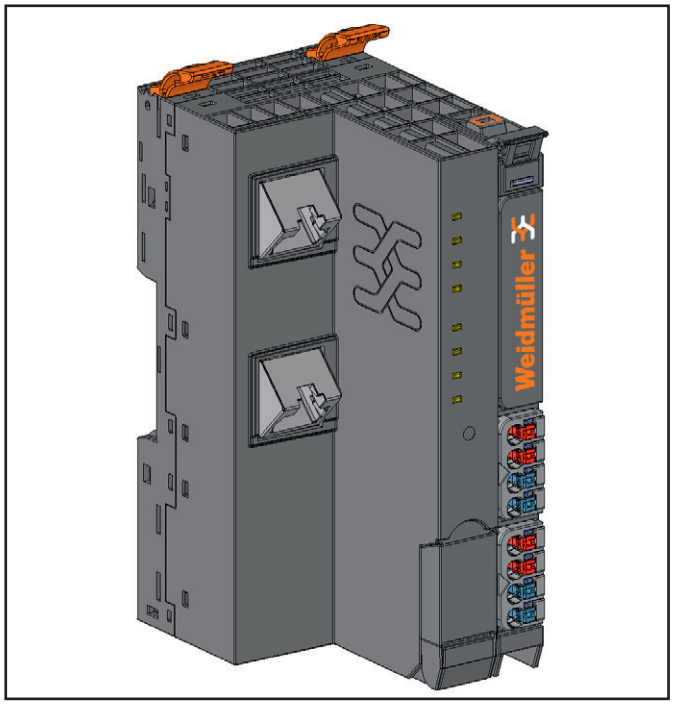

Fieldbus coupler UR20-FBC-PN-IRT (Item No. 1334880000), UR20-FBC-PN-IRT-V2 (Item No. 2566380000)

Status indicators

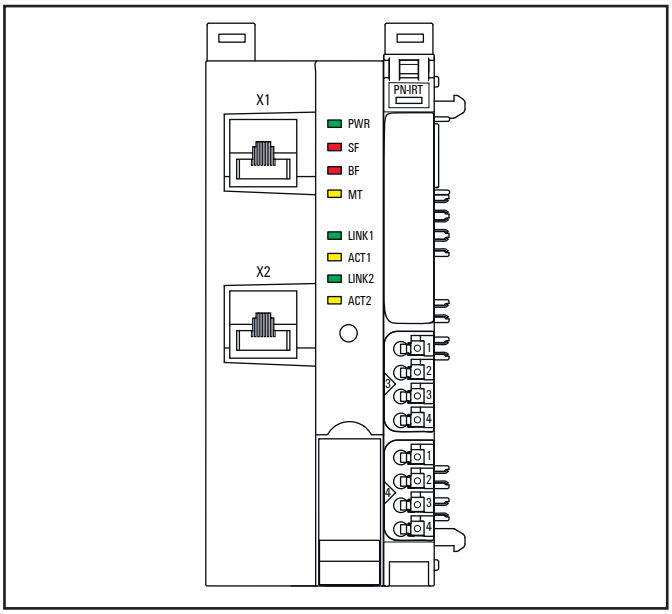

LED status indicators UR20-FBC-PN-IRT, UR20-FBC-PN-IRT-V2, troubleshooting see Chapter 12

PWR	Power LED	**Green**: Supply voltage connected **Red:** Coupler not yet started completely or hardware error
SF	Collective error	**Red:** Configuration error, or error in the coupler, or error in a module, or there is a new diagnostic message **Red flashing**: Station in Force mode
BF	Bus failure	**Red:** No connection to the fieldbus **Red flashing**: Configuration error, no connection to the control unit, or error in the parameter set, or firmware update is running
MT	Maintenance	**Yellow**: Error on the system bus or the fieldbus
LINK1	Connection	**Green**: Connection established between port 1 of the coupler and another field device
ACT1	Active	**Yellow**: Data being exchanged on port 1
LINK2	Connection	**Green**: Connection established between port 2 of the coupler and another field device
ACT2	Active	**Yellow**: Data being exchanged on port 2

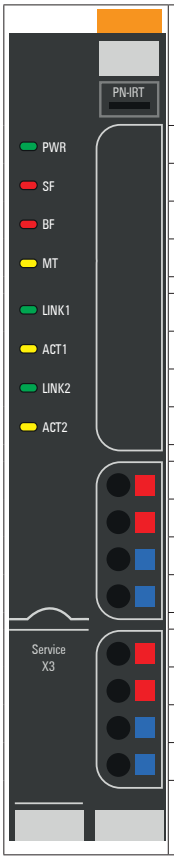

	Coupler power supply LED green: supply voltage > 18 V red: at least one current path < 18 V
3.1	Green: Input current path supply voltage > 18 V DC
3.2	Red: Input current path supply voltage < 18 V DC
3.4	Red: Internal fuse defective
4.1	Green: Output current path supply voltage > 18 V DC
4.2	Red: Output current path supply voltage < 18 V DC
4.4	Red: Internal fuse defective

LED indicators UR20-FBC-PN-IRT, UR20-FBC-PN-IRT-V2, troubleshooting see Chapter 12

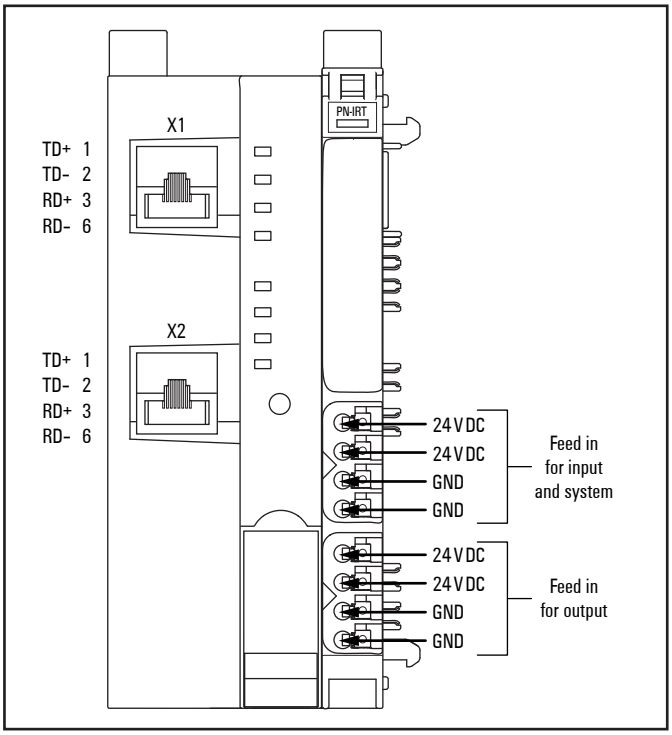

Connection diagram UR20-FBC-PN-IRT, UR20-FBC-PN-IRT-V2

ATTENTION

Risk of material damage!

In the case of a maximum power supply of >8 A and a maximum temperature of >+55 °C, all four contacts must be connected with 1.5 mm² wiring!

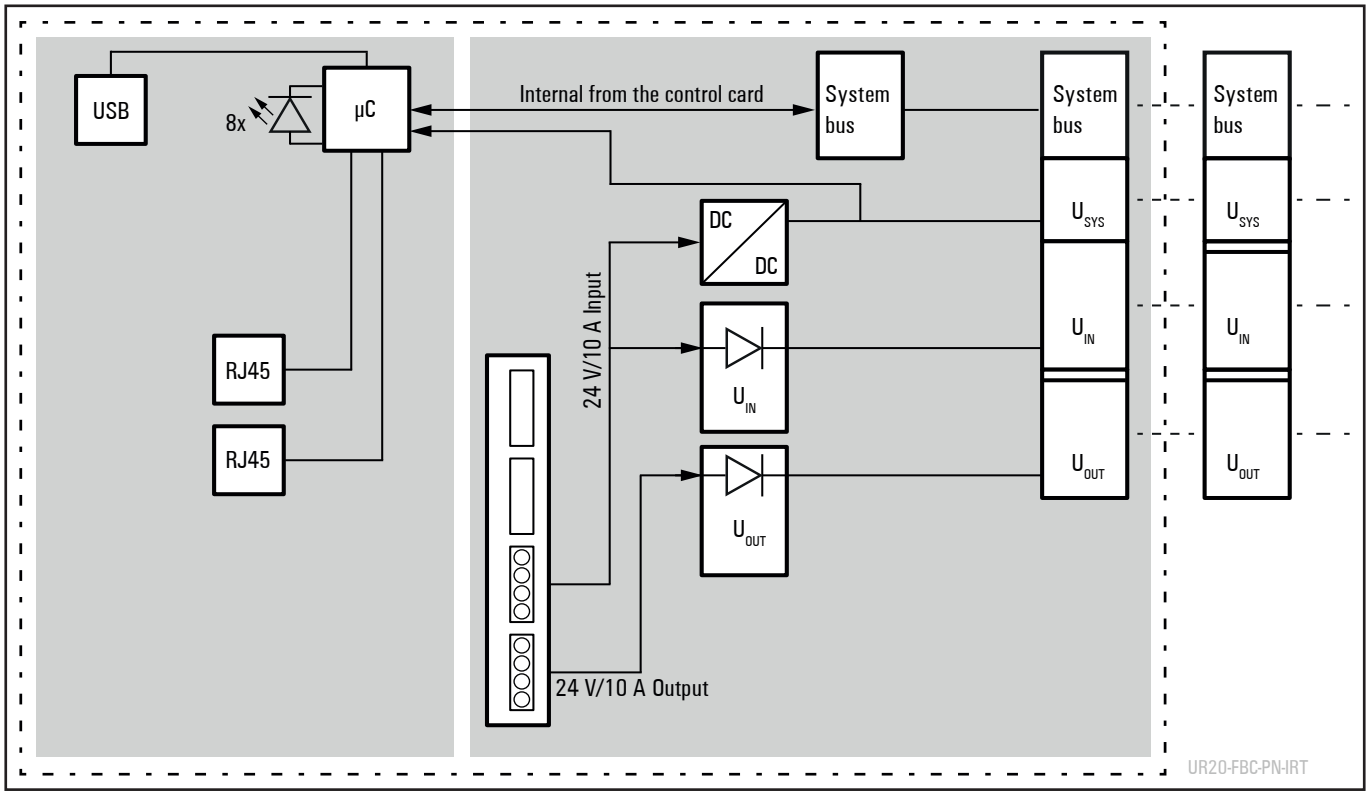

Block diagram UR20-FBC-PN-IRT, UR20-FBC-PN-IRT-V2

Technical data UR20-FBC-PN-IRT (Item No. 1334880000), UR20-FBC-PN-IRT-V2 (Item No. 2566380000)

System data		
Connection	2 x RJ-45	
Fieldbus protocol	PROFINET IO (IRT, RT)	
Redundancy protocol	MRP: UR20-FBC-PN-IRT, UR20-FBC-PN-IRT-V2	
	S2: UR20-FBC-PN-IRT-V2	
Input data width	max. 512 Byte	
Output data width	max. 512 Byte	
Parameter data	max. 4362 Byte	
Diagnostic data	max. 1408 Byte	
Number of modules	max. 64 active	
Configuration interface	Micro USB 2.0	
Transfer rate	Fieldbus	max. 100 Mbps
	u-remote system bus	max. 48 Mbps
Fast start-up[1]	< 500 ms	with a maximum of 10 modules
Supply		
Supply voltage for system and inputs	24 V DC +20 % / -15 %	
Supply voltage for outputs	24 V DC +20 % / -15 %	
Feed-in current[2] **for input modules**	max. 10 A	
Feed-in current[2] **for output modules**	max. 10 A	
Current consumption from system current path I_{SYS}	UR20-FBC-PN-IRT: 116 mA, UR20-FBC-PN-IRT-V2: 100 mA	
Temperature data[2]		
UR20-FBC-PN-IRT	Operation (horizontal installation)	-20 °C to +60 °C / -4 °F ... +140 °F (2 x 8 A power supply) -20 °C to +55 °C / -4 °F ... +131 °F (2 x 10 A power supply)
	Operation (vertical installation)	-20 °C to +55 °C / -4 °F ... +131 °F (2 x 6 A power supply) -20 °C to +50 °C / -4 °F ... +122 °F (2 x 8 A power supply)
UR20-FBC-PN-IRT-V2	Operation (horizontal installation)	-20 °C to +60 °C / -4 °F ... +140 °F (2 x 10 A power supply)
	Operation (vertical installation)	-20 °C to +55 °C / -4 °F ... +131 °F (2 x 8 A power supply)
	Storage, transport	-40 °C to +85 °C / -40 °F ... +185 °F
Connection data		
Type of connection	"PUSH IN"	
Conductor cross-section	Single-wired, fine-wired	0.14 ... 1.5 mm² (AWG 26 ... 16)
Weight		
Weight (operational status)	220 g	
General data, see Section 3.2		

1) To enable Fast Start-up media redundancy (MRP) must be deactivated on PLC start up.
2) Restrictions for the use in potentially explosive atmosphere:
- Only horizontal installation
- Max. 8 A power supply for fieldbus coupler UR20-FBC-PN-IRT

Overview of editable parameters UR20-FBC-PN-IRT, UR20-FBC-PN-IRT-V2

Parameter	Optional values	Default
IP address	4 numbers between 0 and 255	
Subnet mask	4 numbers between 0 and 255	
Gateway	4 numbers between 0 and 255	
Webserver via Ethernet[1)]	disabled / enabled	enabled
IP address USB port[1)]	192.168.1.202, 192.168.2.202, 192.168.3.202 ... 192.168.20.202	192.168.1.202
Station name (V2 only)	free text, max. 240 characters, permitted characters: a-z, 0-9, full stop, hyphen	
HTTPS setting (V2 only)	HTTP & HTTPS concurrent operation / only HTTPS; no HTTP	HTTP & HTTPS concurrent operation
Process alarm	disabled / enabled	disabled
Diagnostic alarm	disabled / enabled	disabled
Type of diagnostic alarm	Extended channel diagnostic (short diagnostic) / Vendor-specific diagnostic (complete diagnostic)	Extended channel diagnostic (short diagnostic)
Output behaviour on fieldbus error	All outputs off / Enable substitute value / Hold last value	All outputs off
Module behaviour on hot swap	Continue data exchange / Behaviour like fieldbus error	Continue data exchange
Data format	Motorola / Intel	Motorola
Lock force mode	Force mode unlocked / Force mode locked	Force mode unlocked
Option handling	disabled / enabled	disabled

1) Change requires restart of the fieldbus coupler.

Reading diagnostic data

The last diagnostic telegram reported by the respective module can be read out from a slot via the acyclic services (ReadRecord). The diagnostic data are listed in the respective module description (see chapter 6).
The following diagnostic data are available:

Index 0	the first 4 Byte
Index 2	47 Byte (the complete string)

Option handling via acyclic data

By using the option handling you can configure a UR20 station in the PLC diverging from the real station. For this purpose the parameter must be enabled and a dataset with the correlation between configured and real station has to be sent to the coupler. The station will not be operable without this dataset.
The dataset has to be written in slot 0, Index 196 with the following structure:

Byte	Meaning
1	Length of the dataset inclusive header (4+number of configured modules)
2	Fix 0xC4
3	Version number, fix 0x01
4	Version number, fix 0x00
5	Assignment configured slot 1
6	Assignment configured slot 2
...	...

As assignment value in Byte 5 and subsequent you can use the real number or 0 in the case the configured slot is not existing.
The dataset can also be read back via the same index.

Example:

Real station	4DI	8DO	4AI-UI16	
Station configured in the PLC	4DI	4DO	8DO	4AI-UI16

Dataset to be written:
0x08, 0xC4, 0x01, 0x00, 0x01, 0x00, 0x02, 0x03
With this dataset the configured slot 2 will be marked as nonexistant.
After writing the dataset the coupler will execute a reset. The dataset is saved remanently as long as the parameter “Option handling” is enabled.

Option handling via process data (only V2)

From firmware version 01.15.00 onwards, the coupler supports option handling via proccess data. For this function, you can chose the DAPs **UR20-FBC-PN-IRT-V2 Profinet Device with Option Handling Data** or **UR20-FBC-PN-IRT-V2 Profinet Device with Option Handling Data and Status Word** in the GSDML V2.43.
As soon as the **Option handling** parameter is enabled, the coupler has 9 bytes of output process data:
Byte 0, bit 0 controls the enabling or disabling of modules.
Bytes 1 to 8 control the modules. The 64 bits represent one module slot each. For each module to be disabled, the corresponding bit must be set to 1.
The data in byte 1 to 8 are taken over to byte 0, bit 0 by a rising edge (0 → 1).

Example

The second module within a UR20 station shall be disabled.

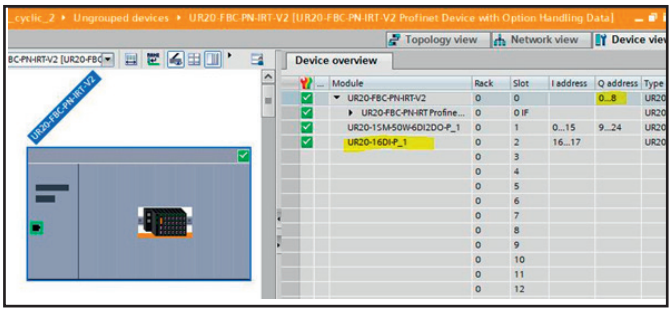

► First set bit 2 in QB1 to 1.
► Then set bit 0 in QB0 to 1.

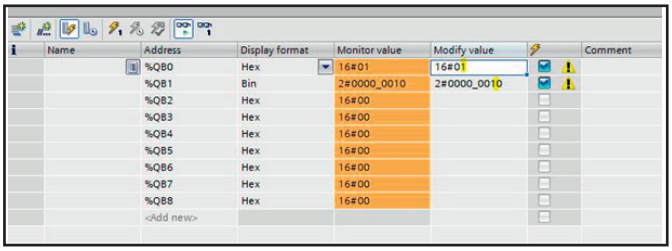

Status word

The following process data are available if the PROFINET coupler is used with status word.

Process data[1] inputs, Status word UR20-FBC-PN-IRT, UR20-FBC-PN-IRT-V2

Byte	Bit	Name	Description
IB0	0	MRP enabled	Media redundancy is enabled.
	1	MRP role	MRP role: 0 = client, 1 = manager. The PROFINET coupler supports only the client role.
	2	Force mode active	The force mode was activated via the web server. Process data cannot be exchanged between the master and forced channels.
	3	Errorbit 11	Reserve bit 11, currently not used
	4	Errorbit 12	Reserve bit 12, currently not used
	5	Voltage U_{OUT} error	Error on the voltage supply of the outputs
	6	Voltage U_{IN} error	Error on the voltage supply of the inputs
	7	IO-Link diagnosis	A diagnosis is present on an IO-Link device.
IB1	0	Summarized module diagnosis	A diagnosis is available for at least one module with diagnostics functionality.
	1	Errorbit 1	Reserve bit 1, currently not used
	2	Errorbit 2	Reserve bit 2, currently not used
	3	Systembus error	Error on the system bus. Communication with the connected modules is disrupted.
	4	Port 1 Link active	The port 1 link is active.
	5	Port 2 Link active	The port 2 link is active.
	6	I/O-Configuration error	Deviation in the configuration.
	7	Master configuration error	More than two modules have been physically removed from the station.

1) Internal process data mapping with data format “Standard”. Depending on the fieldbus specification and the data format of the communicating fieldbus components the bytes and/or words can be reversed during data transfer.

Deactivating SNMP

SNMP (simple network management protocol, version V1) can be deactivated in UR20-FBC-PN-IRT-V2 couplers (from FW Version 01.15.00), if GSDML version GSDML V2.43 is used. The activation or deactivation is done in object SNMP-adjust, see settings of the coupler.
Default SNMP community names can be changed, so that write access to the device without prior user authentication isn't possible any more.

Access to the index: via TIA Portal v19, or acyclical via Index 0x8200 at the coupler subslot 0x8000.
The following table shows as an example the structure of the messages to sent in order to achieve the respective SNMP status.

SNMP status	BlockHeader				SNMPControl	SNMPReadOnlyCommunityName		SNMPReadWriteCommunityName	
	BlockType	BlockLength	BlockVersion High	BlockVersion Low	SNMPControl	Length	Name	Length	Name
	CIMSNMP Adjust, 2 Bytes	Number of Bytes, without counting the fields BlockType and BlockLength, 2 Bytes, 0x0003 - 0xFFFF	Version 1, 1 Byte	Version 0, 1 Byte	Command[2], 2 Bytes, 0x0000 - 0x0003	Length of the ReadOnly Community Name, 1 Byte, 0x00 - 0xF0	ReadOnly Community Name, ASCII code[1, 3], 1-240 Bytes	Length of the ReadWrite Community Name, 1 Byte, 0x00 - 0xF0	ReadWrite Community Name, ASCII code[1, 4], 1-240 Bytes
Disable SNMP	0x030 0x00	0x00 0x06	0x01	0x00	0x00 0x00	0x00		0x00	
Enable SNMP, Enable Read access	0x030 0x00	0x00 0x06	0x01	0x00	0x00 0x01	0x00		0x00	
Enable SNMP, Enable Read and Write access	0x030 0x00	0x00 0x06	0x01	0x00	0x00 0x02	0x00		0x00	
Enable SNMP, Enable Read access, set SNMPReadOnly Community Name[1, 3] to "abc"	0x030 0x00	0x00 0x09	0x01	0x00	0x00 0x01	0x03	0x61 0x62 0x63	0x00	
Enable SNMP, Enable Read and Write access, set SNMPReadOnly Community Name to "abc" and set SNMPReadWrite Community[1, 4] Name to "DEF"	0x030 0x00	0x00 0x0C	0x01	0x00	0x00 0x02	0x03	0x61 0x62 0x63	0x03	0x44 0x45 0x46

1) Allowed are ASCII characters a-z, A-Z, 0-9. The characters 0x2D (-) and 0x2E (.) are also allowed, but not at the beginning or at the end of the Community Name.
2) The following commands are available: 0x00 – disable SNMP; 0x01 – Enable SNMP; Enable Read access; 0x02 – Enable SNMP, Enable Read and Write access; 0x03 – Reserved
3) The default SNMPReadOnly Community Name is „public".
4) The default SNMPReadWrite Community Name is „private".

.

Coupler-dependent data width of I/O modules UR20-FBC-PN-IRT, UR20-FBC-PN-IRT-V2

Item No.	Module	Configuration	Parameters	Diagnostics	Process data	
					Input	Output
		Bytes	Bytes	Bytes	Bytes	Bytes
1334880000	UR20-FBC-PN-IRT	4	10	47	4	4
2566380000	UR20-FBC-PN-IRT-V2	4	10	47	4	4
1315170000	UR20-4DI-P[1)]	4	8	47	2	1
2009360000	UR20-4DI-P-3W[1)]	4	8	47	2	1
1315180000	UR20-8DI-P-2W	4	12	47	2	1
1394400000	UR20-8DI-P-3W	4	12	47	2	1
1315190000	UR20-8DI-P-3W-HD	4	12	47	2	1
1315200000	UR20-16DI-P	4	–	47	3	1
1315210000	UR20-16DI-P-PLC-INT	4	–	47	3	1
1460140000	UR20-2DI-P-TS	4	10	47	61	1
1460150000	UR20-4DI-P-TS	4	12	47	61	1
1315350000	UR20-4DI-N[1)]	4	8	47	2	1
1315370000	UR20-8DI-N-3W	4	12	47	2	1
1315390000	UR20-16DI-N	4	–	47	3	1
1315400000	UR20-16DI-N-PLC-INT	4	–	47	3	1
1550070000	UR20-4DI-2W-230V-AC[1)]	4	–	47	2	1
2457240000	UR20-8DI-ISO-2W	4	12	47	2	1
1315220000	UR20-4DO-P[1)]	4	5	47	1	2
1315230000	UR20-4DO-P-2A[1)]	4	5	47	1	2
1394420000	UR20-4DO-PN-2A	4	5	47	1	2
1315240000	UR20-8DO-P	4	5	47	1	2
1509830000	UR20-8DO-P-2W-HD	4	5	47	1	2
1315250000	UR20-16DO-P	4	–	47	1	3
1315270000	UR20-16DO-P-PLC-INT	4	–	47	1	3
1315410000	UR20-4DO-N[1)]	4	5	47	1	2
1315420000	UR20-4DO-N-2A[1)]	4	5	47	1	2
1315430000	UR20-8DO-N	4	5	47	1	2
1315440000	UR20-16DO-N	4	–	47	1	3
1315450000	UR20-16DO-N-PLC-INT	4	–	47	1	3
2457250000	UR20-4DO-ISO-4A[1)]	4	5	47	1	2
2456530000	UR20-8DIO-P-3W-DIAG	4	12	47	2	2
1315540000	UR20-4RO-SSR-255[1)]	4	5	47	1	2
1315550000	UR20-4RO-CO-255[1)]	4	5	47	1	2
1315600000	UR20-2PWM-PN-0.5A	4	12	47	5	13
3036960000	UR20-2PWM-PN-0.5A-V2	4	12	47	5	13
1315610000	UR20-2PWM-PN-2A	4	12	47	5	13

1) Also available as follower module, recognisable in the device description file by ... before the module name. Can follow another supported module and then occupies one byte less in the process data (input 1 and output 1).
2) See manual for UR20-4COM-IO-LINK communication module
3) Input process data and output process data must have the same value.

Coupler-dependent data width of I/O modules UR20-FBC-PN-IRT, UR20-FBC-PN-IRT-V2

Item No.	Module	Configuration	Parameters	Diagnostics	Process data	
					Input	Output
		Bytes	Bytes	Bytes	Bytes	Bytes
3036950000	UR20-2PWM-PN-2A-V2	4	12	47	5	13
269791000	UR20-2PWM-I-2.5A-2DI-P	4	68	47	9	7
2489830000	UR20-1SM-50W-6DI2DO-P	4	25	47	17	17
2705620000	UR20-2AI-UI-16	4	8	47	5	1
2566090000	UR20-2AI-UI-16-DIAG	4	10	47	5	1
1315620000	UR20-4AI-UI-16	4	10	47	9	1
1315690000	UR20-4AI-UI-16-DIAG	4	12	47	9	1
1993880000	UR20-4AI-UI-DIF-16-DIAG	4	12	47	9	1
2544660000	UR20-4AI-UI-DIF-32-DIAG	4	44	47	17	1
2566960000	UR20-4AI-UI-ISO-16-DIAG	4	27	47	9	1
1506920000	UR20-4AI-UI-16-HD	4	10	47	9	1
1506910000	UR20-4AI-UI-16-DIAG-HD	4	12	47	9	1
1394390000	UR20-4AI-UI-12	4	10	47	9	1
1529370000	UR20-8AI-I-16-DIAG	4	15	47	17	1
1315650000	UR20-8AI-I-16-HD	4	14	47	17	1
1315720000	UR20-8AI-I-16-DIAG-HD	4	16	47	17	1
1315670000	UR20-8AI-I-PLC-INT	4	14	47	17	1
1315700000	UR20-4AI-RTD-DIAG	4	32	47	9	1
2456540000	UR20-4AI-RTD-HP-DIAG	4	48	47	9	1
1315710000	UR20-4AI-TC-DIAG	4	32	47	9	1
3233190000	UR20-4AI-TC-CJT-DIAG	3	31	47	16	–
2001670000	UR20-4AI-R-HS-16-DIAG	4	67	47	9	1
2828350000	UR20-4AI-I-HART-ISO-16	4	13	47	17	17
2555940000	UR20-8AI-RTD-DIAG-2W	4	14	47	17	1
3039320000	UR20-15AI-U-16-DIAG	4	28	47	10	2
1990070000	UR20-2AI-SG-24-DIAG	4	30	47	17	17
2007420000	UR20-3EM-230V-AC	4	31	47	17	17
2920830000	UR20-3EM-400V-AC-CT1A	4	12	47	5	13
2920840000	UR20-3EM-400V-AC-CT5A	4	12	47	5	13
2920850000	UR20-3EM-400V-AC-RC	4	12	47	5	13
2920860000	UR20-3EM-400V-AC-333mV	4	12	47	5	13
2705630000	UR20-2AO-UI-16	4	10	47	1	5
2566100000	UR20-2AO-UI-16-DIAG	4	11	47	1	5
2566970000	UR20-2AO-UI-ISO-16-DIAG	4	18	47	1	5
1315680000	UR20-4AO-UI-16	4	16	47	1	9
2453880000	UR20-4AO-UI-16-M	4	16	47	1	9

1) Also available as follower module, recognisable in the device description file by ... before the module name. Can follow another supported module and then occupies one byte less in the process data (input 1 and output 1).
2) See manual for UR20-4COM-IO-LINK communication module
3) Input process data and output process data must have the same value.

Coupler-dependent data width of I/O modules UR20-FBC-PN-IRT, UR20-FBC-PN-IRT-V2

Item No.	Module	Configuration	Parameters	Diagnostics	Process data	
					Input	Output
		Bytes	Bytes	Bytes	Bytes	Bytes
1315730000	UR20-4AO-UI-16-DIAG	4	17	47	1	9
2453870000	UR20-4AO-UI-16-M-DIAG	4	17	47	1	9
1510690000	UR20-4AO-UI-16-HD	4	16	47	1	9
1506930000	UR20-4AO-UI-16-DIAG-HD	4	17	47	1	9
1315570000	UR20-1CNT-100-1DO	4	25	47	13	11
1315590000	UR20-2CNT-100	4	44	47	13	13
1315580000	UR20-1CNT-500	4	25	47	9	11
1508080000	UR20-2FCNT-100	4	6	47	21	13
1508090000	UR20-1SSI	4	12	47	7	1
1315750000	UR20-1COM-232-485-422	4	10	47	17	17
2826800000	UR20-1COM-232-485-422-V2	4	37	47	20	20
2007430000	UR20-1COM-SAI-PRO	4	–	47	1	1
3116480000	UR20-1COM-SAI-PRO-V2	4	–	47	1	1
2489840000	UR20-1COM-CANOPEN	4	41	47	19, 27, 35, 51, 65, 129 [3]	19, 27, 35, 51, 65, 129 [3]
3040800000	UR20-1COM-CAN	4	40	47	16, 29, 43, 63, 94, 123 [3]	16, 29, 43, 63, 94, 123 [3]
1315740000	UR20-4COM-IO-LINK	4	30	47	[2]	[2h]
2819690000	UR20-4COM-IO-LINK-V2	4	30	47	[2]	[2h]
1529780000	UR20-4DI-4DO-PN-FSOE	–	–	–	–	–
1529800000	UR20-8DI-PN-FSOE	–	–	–	–	–
1335060000	UR20-4DI-4DO-PN-FSPS	4	23	47	6	6
1335070000	UR20-8DI-PN-FSPS	4	23	47	6	6
1335030000	UR20-PF-O-1DI-SIL	4	–	47	5	1
1335040000	UR20-PF-O-2DI-DELAY-SIL	4	–	47	5	1
1335050000	UR20-PF-O-2DI-SIL	4	–	47	5	1
Max. data (in bytes)		260	4362	1408	512	512

1) Also available as follower module, recognisable in the device description file by ... before the module name. Can follow another supported module and then occupies one byte less in the process data (input 1 and output 1).

2) See manual for UR20-4COM-IO-LINK communication module

3) Input process data and output process data must have the same value.

5.3 EtherCAT fieldbus coupler

The UR20-FBC-EC fieldbus coupler is an EtherCAT[1)] participant certified by the EtherCAT Technology Group. The coupler is the head module for the u-remote system bus, to which up to 64 active u-remote modules can be connected. The EtherCAT coupler has two Ethernet ports, the integrated switch supports a line network structure.
The coupler can be accessed with a system-independent web server application via the USB service interface or the EtherCAT. Thus, all information, such as diagnostics, status values and parameters, can be read and all connected modules can be simulated or forced.

Process data that are being exchanged with the PLC while the coupler is connected to a PC via USB might be processed with delay (Jitter). For this reason do not use the USB interface permanently but only to readout diagnosis.

The station's main power supply is integrated in the coupler. Power is supplied via two 4-pole connectors, separated into the input and output current paths.

With the u-mation configurator starting with version 1.4.0, the configuration file for an IO-Link module UR20-4COM-IO-LINK or UR20-4COM-IO-LINK-V2 can be generated in the file format BSC. The BSC file can be loaded onto the coupler via FoE (Filetransfer over EtherCAT). The coupler then carries out the configuration of the module and the connected IO-Link devices. When generating the configuration file, the slot number of the module must be specified.

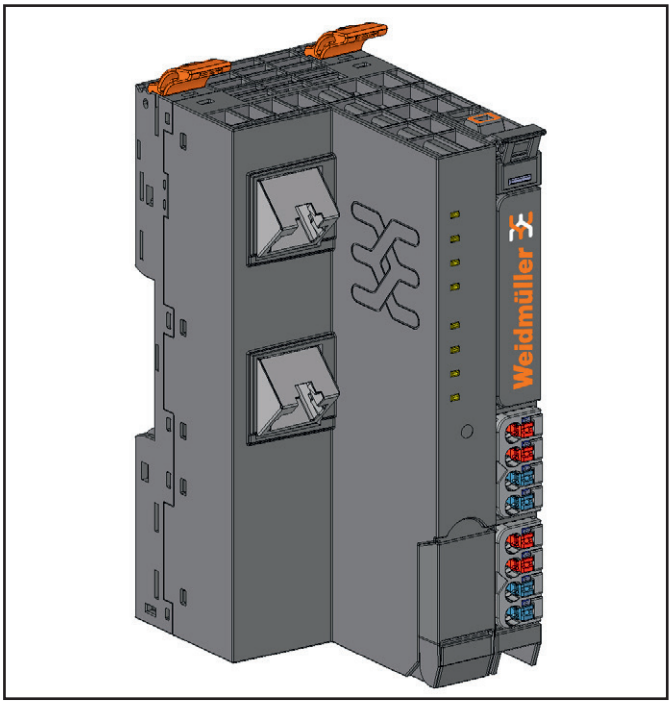

Fieldbus coupler UR20-FBC-EC (Item No. 1334910000)

1) EtherCAT® and Safety over EtherCAT® are registered trademarks and patented technologies, licensed by Beckhoff Automation GmbH, Germany

Status indicators

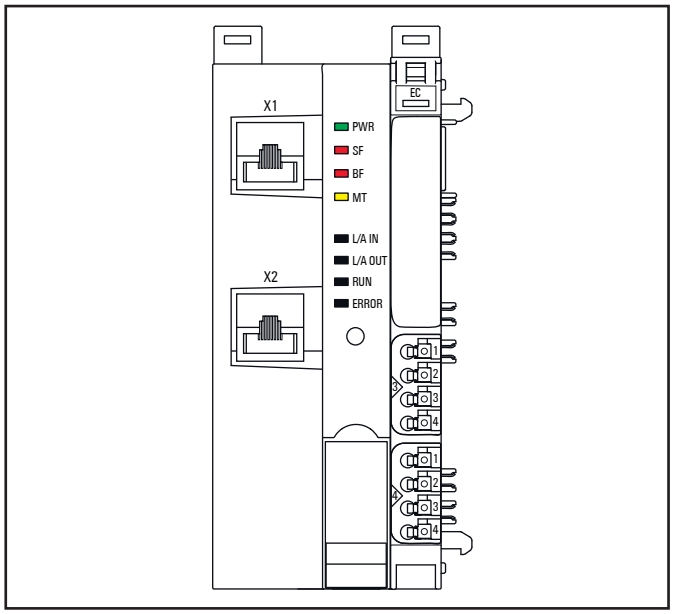

LED status indicators UR20-FBC-EC, troubleshooting see Chapter 12

PWR	Power LED	**Green**: Supply voltage connected **Red:** Coupler not yet started completely or hardware error
SF	Collective error	**Red:** Configuration error, or error in the coupler, or error in a module, or there is a new diagnostic message **Red flashing**: Station in Force mode
BF	Bus failure	**Red:** No connection to the fieldbus **Red flashing**: Configuration error, no connection to the control unit, or error in the parameter set
MT	Maintenance	**Yellow**: Error on the system bus
L/A IN	Connection/Activity	**Green**: Connection established between port 1 of the coupler and another field device **Green flashing**: Data being exchanged on port 1
L/A OUT	Connection/Activity	**Green**: Connection established between port 2 of the coupler and another field device **Green flashing**: Data being exchanged on port 2
RUN	Coupler state	**Off**: INIT **Green flashing** PRE-OPERATIONAL **Green lights up briefly**: SAFE-OPERATIONAL **Green**: OPERATIONAL
ERROR	Internal error	**Red**: Critical error in the coupler **Red lights up briefly**: Error in coupler application **Red briefly lights up twice**: Output Syncmanager Watchdog expired **Red flashing**: Configuration error

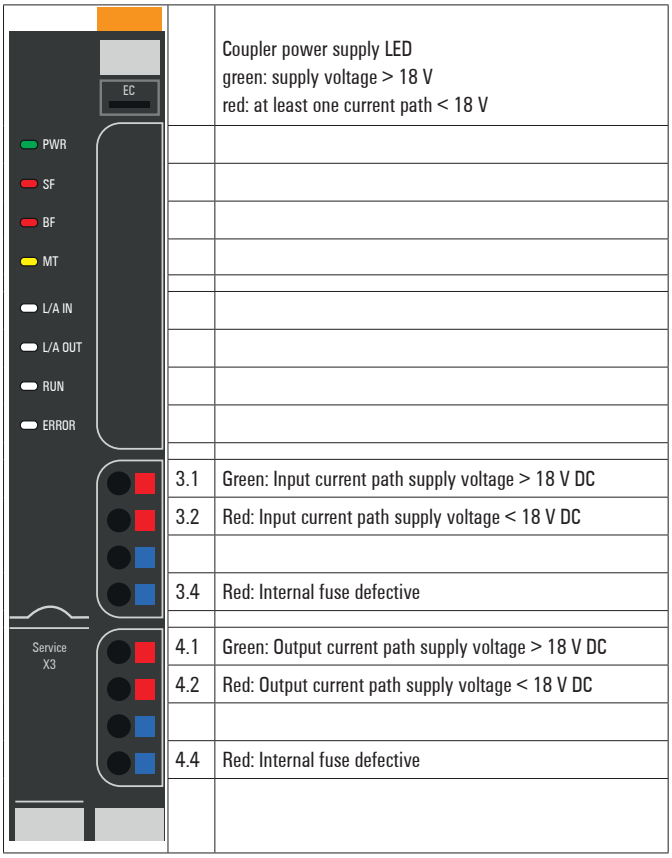

LED indicators UR20-FBC-EC, troubleshooting see Chapter 12

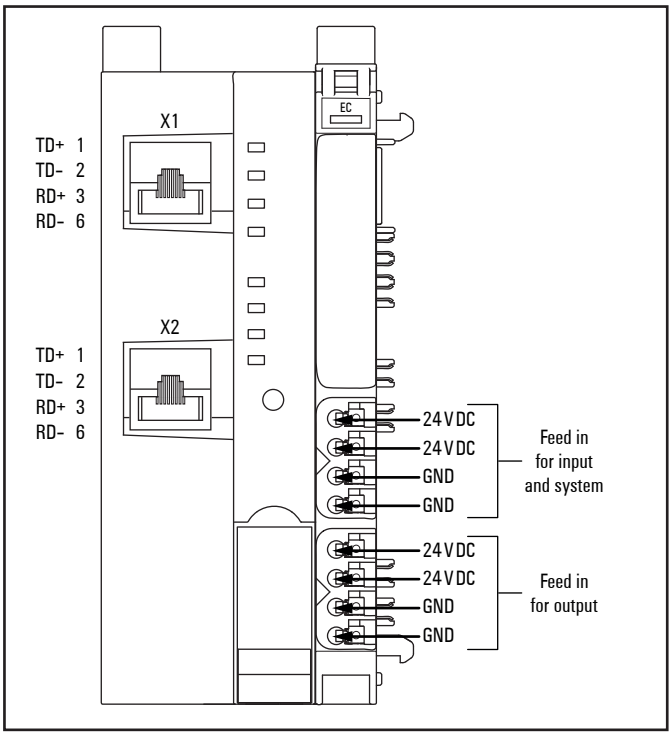

Connection diagram UR20-FBC-EC

ATTENTION

Risk of material damage!

In the case of a maximum power supply of >8 A and a maximum temperature of >+55 °C, all four contacts must be connected with 1.5 mm² wiring!

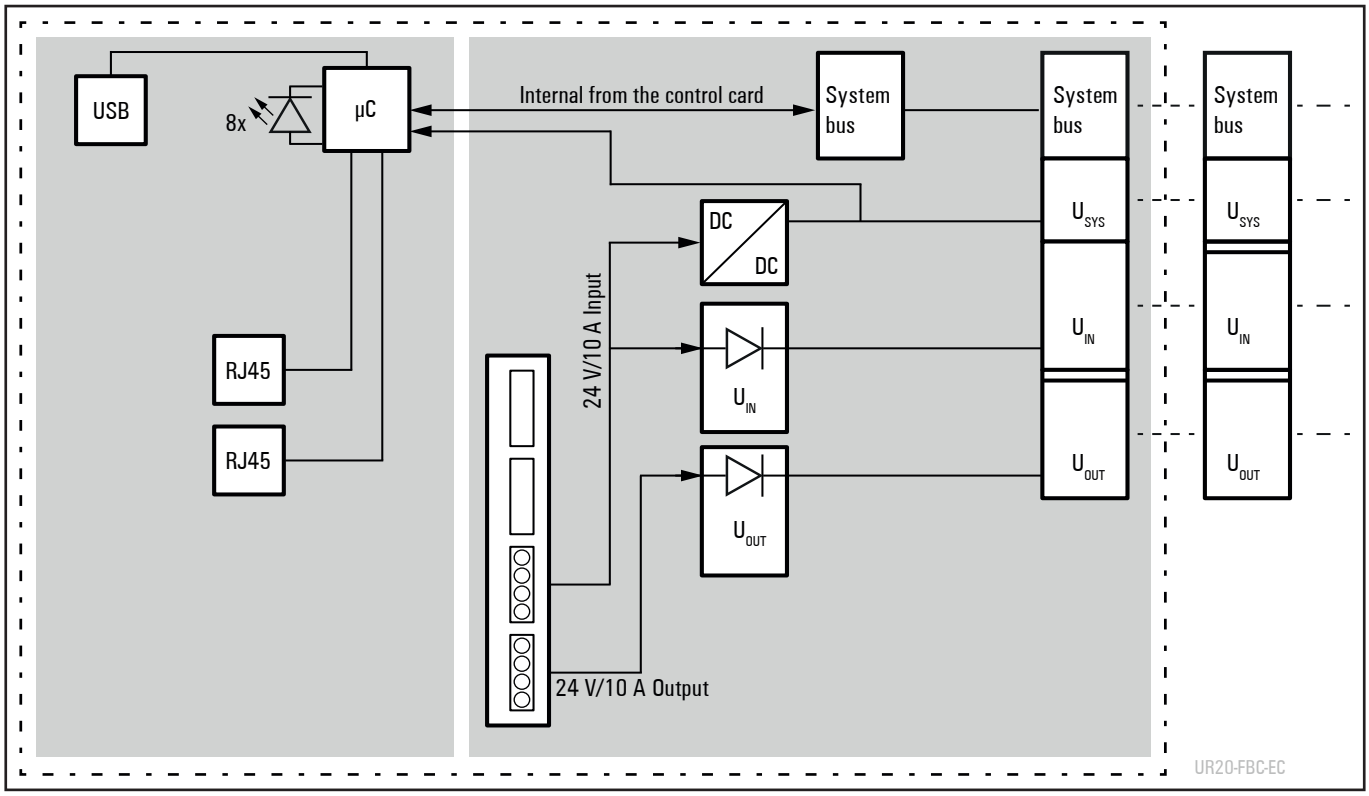

Block diagram UR20-FBC-EC

Technical data UR20-FBC-EC (Item No. 1334910000)

System data		
Connection	2 x RJ-45	
Fieldbus protocol	EtherCAT	
Process data	max. 1024 Byte	
Parameter data	max. 64 x 64 = 4 KB	
Diagnostic data	max. 64 x 50 Byte	
Number of modules	max. 64 active	
Configuration interface	Micro USB 2.0	
Distributed Clock	supported (USB interface not usable at the same time)	
Transfer rate	Fieldbus	max. 100 Mbps
	u-remote system bus	max. 48 Mbps
Supply		
Supply voltage for system and inputs	24 V DC +20 % / -15 %	
Supply voltage for outputs	24 V DC +20 % / -15 %	
Feed-in current[1] for input modules	max. 10 A	
Feed-in current[1] for output modules	max. 10 A	
Current consumption from system current path I_{SYS}	130 mA	
Temperature data[1]		
< HW 02.00.00	Operation (horizontal installation)	-20 °C to +60 °C / -4 °F ... +140 °F (2 x 8 A power supply) -20 °C to +55 °C / -4 °F ... +131 °F (2 x 10 A power supply)
	Operation (vertical installation)	-20 °C to +55 °C / -4 °F ... +131 °F (2 x 6 A power supply) -20 °C to +50 °C / -4 °F ... +122 °F (2 x 8 A power supply)
≥ HW 02.00.00	Operation (horizontal installation)	-20 °C to +60 °C / -4 °F ... +140 °F (2 x 10 A power supply)
	Operation (vertical installation)	-20 °C to +55 °C / -4 °F ... +131 °F (2 x 8 A power supply)
	Storage, transport	-40 °C to +85 °C / -40 °F ... +185 °F
Connection data		
Type of connection	"PUSH IN"	
Conductor cross-section	Single-wired, fine-wired	0.14 ... 1.5 mm² (AWG 26 ... 16)
Weight		
Weight (operational status)	227 g	
General data, see Section 3.2.		

1) Restrictions for the use in potentially explosive atmosphere:
- Only horizontal installation
- Max. 8 A power supply for fieldbus coupler <HW 02.00.00

Overview of the editable parameters UR20-FBC-EC

Parameter	Optional values	Default
IP address USB port[1)]	192.168.1.202, 192.168.2.202, 192.168.3.202 ... 192.168.20.202	192.168.1.202
Webserver via Ethernet[1)]	disabled (0) / enabled (1)	enabled
EtherCAT ID[2)]	0 ... 65535	0 (disabled)
I/O data of station synchronous	disabled (0) / enabled (1)	disabled
Slot counting	Count mode from 0 (0) / Count mode from 1 (1)	Count mode from 0
HTTPS setting	HTTP & HTTPS concurrent operation / only HTTPS; no HTTP	HTTP & HTTPS concurrent operation
Process alarm	disabled (0) / enabled (1)	disabled
Diagnostic alarm	disabled (0) / enabled (1)	disabled
Output behaviour on fieldbus error	All outputs off (0) / Enable substitute value (1) / Hold last value (2)	All outputs off
Module behaviour on hot swap	Continue data exchange (0) / Behaviour like fieldbus error (1)	Continue data exchange
Data format	Motorola (0) / Intel (1)	Intel
Lock force mode	Force mode unlocked (0) / Force mode locked (1)	Force mode unlocked

1) Change requires restart of the fieldbus coupler. 2) Only available in Webserver.

Parameter „ETHERCAT ID“

This parameter is a device identification value and defined as an ID-Selector. It serves the same role as a hardware address selector on an ETHERCAT device. It can be set in the web-server of the coupler, only.
The ETHERCAT ID can be set in any fieldbus state. However, it is only transmitted to the EtherCAT master and activated once the coupler transitions from the INIT state to the PREOP state.
The ETHERCAT ID is supported from firmware 02.07.00.

Parameter „Slot counting“

This parameter determines whether the counting of the module slots in the station starts with 0 or with 1.

Parameter „Lock force mode“

This parameter determines whether he foce mode can be used or whether it is locked.

Status messages of the u-remote station

In addition to the process input data a coupler status word as well as module status bytes are transfered to the SPS. Thus diagnostics and status messages can be read directly.
The coupler status word describes the status of the u-remote station including the following information:

Coupler status bits UR20-FBC-EC

Bit	Name	Meaning
0	Summarized module diagnosis	Module diagnostic is present. A diagnosis is available for at least one module with diagnostics functionality.
1	Station pending	More than one module as been pulled. In this status, the coupler cannot determine whether one of the disconnected modules is plugged back into the correct slot.
2	Errorbit 2	Reserve bit 2, currently not used
3	Systembus error	Error on the system bus. Communication with the connected modules is disrupted.
4	Errorbit 4	Reserve bit 4, currently not used
5	Errorbit 5	Reserve bit 5, currently not used
6	I/O-Configuration error	Deviation in the configuration. The module list has changed. The list of configured modules (Configured Module Ident List 0xF030) differs from the module list detected by the coupler (Detected Module Ident List 0xF050).
7	Master configuration error	The list of configured modules (Configured Module Ident List 0xF030) was not transmitted. The coupler cannot perform the comparison with the list of detected modules (Detected Module Ident List 0xF050). Changing to the the OPERATIONAL status is nevertheless possible if it is ensured that the configured module configuration matches with the installed module configuration.
8	Errorbit 8	Reserve bit 8, currently not used
9	Errorbit 9	Reserve bit 9, currently not used
10	Force mode active	Web server force mode is active. Force mode was activated through the web server. Process data cannot be exchanged between the EtherCAT master and forced channels.
11	Errorbit 11	Reserve bit 11, currently not used
12	Errorbit 12	Reserve bit 12, currently not used
13	Voltage U_{OUT} error	Error in the supply voltage of outputs
14	Voltage U_{IN} error	Error in the supply voltage of system and inputs
15	IO-Link diagnosis	A diagnosis is present on an IO-Link device.

Status messages of the modules

The status byte **Module state** is added to each module's process data (with the exception of safe I/O modules UR20-*-FSOE). The status byte provides the following information:

Module status messages

Value	Meaning
0x00	Slot is unassigned
0x01	Module OK
0x80	Empty slot, module has been removed
0x81	Incorrect module plugged in
0x82	Diagnosis available

Values written into a CAN object index 0x80nn, subindex 6, 8, 10 or 11 will be read in twisted order!

► Always twist the values when writing into the mentioned subindices.

Example: Write 0x76543210, if 0x1234567 shall be read.

Module diagnosis

The coupler`s status word reveals whether there is a module diagnosis. The history of the module diagnosis can be interrogated via object 0x10F3. A ring buffer stores 20 diagnosis in a way, that the current diagnosis overwrites the eldest one (subindex 06 to 19).

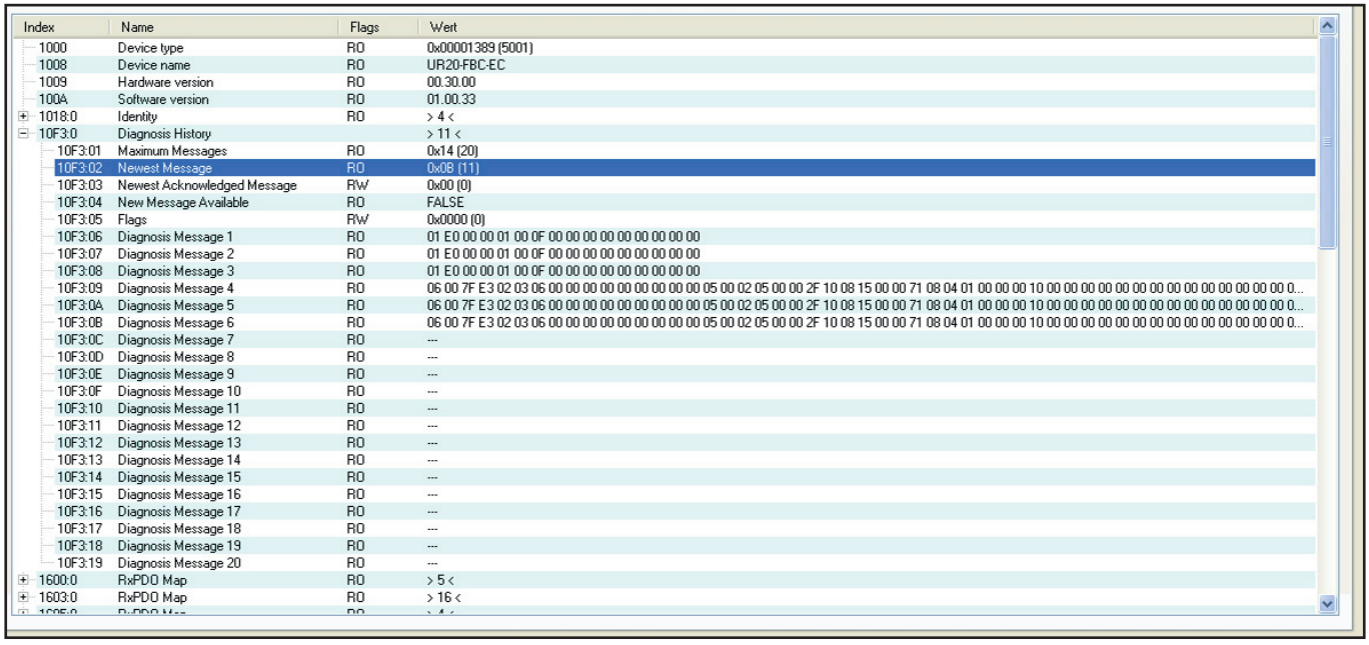

Index	Name	Flags	Wert
1000	Device type	RO	0x00001389 (5001)
1008	Device name	RO	UR20-FBC-EC
1009	Hardware version	RO	00.30.00
100A	Software version	RO	01.00.33
1018:0	Identity	RO	> 4 <
10F3:0	Diagnosis History		> 11 <
10F3:01	Maximum Messages	RO	0x14 (20)
10F3:02	Newest Message	RO	0x0B (11)
10F3:03	Newest Acknowledged Message	RW	0x00 (0)
10F3:04	New Message Available	RO	FALSE
10F3:05	Flags	RW	0x0000 (0)
10F3:06	Diagnosis Message 1	RO	01 E0 00 00 01 00 0F 00 00 00 00 00 00 00 00 00
10F3:07	Diagnosis Message 2	RO	01 E0 00 00 01 00 0F 00 00 00 00 00 00 00 00 00
10F3:08	Diagnosis Message 3	RO	01 E0 00 00 01 00 0F 00 00 00 00 00 00 00 00 00
10F3:09	Diagnosis Message 4	RO	06 00 7F E3 02 03 06 00 00 00 00 00 00 00 00 00 00 00 05 00 02 05 00 00 2F 10 08 15 00 00 71 08 04 01 00 00 00 10 00 00 00 00 00 00 00 00 00 00 00 00 00 00 0...
10F3:0A	Diagnosis Message 5	RO	06 00 7F E3 02 03 06 00 00 00 00 00 00 00 00 00 00 00 05 00 02 05 00 00 2F 10 08 15 00 00 71 08 04 01 00 00 00 10 00 00 00 00 00 00 00 00 00 00 00 00 00 00 0...
10F3:0B	Diagnosis Message 6	RO	06 00 7F E3 02 03 06 00 00 00 00 00 00 00 00 00 00 00 05 00 02 05 00 00 2F 10 08 15 00 00 71 08 04 01 00 00 00 10 00 00 00 00 00 00 00 00 00 00 00 00 00 00 0...
10F3:0C	Diagnosis Message 7	RO	---
10F3:0D	Diagnosis Message 8	RO	---
10F3:0E	Diagnosis Message 9	RO	---
10F3:0F	Diagnosis Message 10	RO	---
10F3:10	Diagnosis Message 11	RO	---
10F3:11	Diagnosis Message 12	RO	---
10F3:12	Diagnosis Message 13	RO	---
10F3:13	Diagnosis Message 14	RO	---
10F3:14	Diagnosis Message 15	RO	---
10F3:15	Diagnosis Message 16	RO	---
10F3:16	Diagnosis Message 17	RO	---
10F3:17	Diagnosis Message 18	RO	---
10F3:18	Diagnosis Message 19	RO	---
10F3:19	Diagnosis Message 20	RO	---
1600:0	RxPDO Map	RO	> 5 <
1603:0	RxPDO Map	RO	> 16 <

History of module diagnosis as shown in TwinCat

Coupler-dependent data width of I/O modules UR20-FBC-EC

Item No.	Module	Configuration	Parameters[1)]	Diagnostics	Process data	
					Input	Output
		Bytes	Bytes	Bytes	Bytes	Bytes
1334910000	UR20-FBC-EC	256		3328	1024	1024
1315170000	UR20-4DI-P	4		47	2	–
2009360000	UR20-4DI-P-3W	4		47	2	–
1315180000	UR20-8DI-P-2W	4		47	2	–
1394400000	UR20-8DI-P-3W	4		47	2	–
1315190000	UR20-8DI-P-3W-HD	4		47	2	–
1315200000	UR20-16DI-P	4		47	3	–
1315210000	UR20-16DI-P-PLC-INT	4		47	3	–
1460140000	UR20-2DI-P-TS	4		47	61	–
1460150000	UR20-4DI-P-TS	4		47	61	1
1315350000	UR20-4DI-N	4		47	2	–
1315370000	UR20-8DI-N-3W	4		47	2	–
1315390000	UR20-16DI-N	4		47	3	–
1315400000	UR20-16DI-N-PLC-INT	4		47	3	–
1550070000	UR20-4DI-2W-230V-AC	4		47	2	–
2457240000	UR20-8DI-ISO-2W	4		47	2	–

1) Each parameter is transferred individually by a SDO transfer (service data objects). For that reason there is no size limit, nevertheless every transfered parameter prolongs starting up the station.
2) Input process data and output process data must have the same value.

Coupler-dependent data width of I/O modules UR20-FBC-EC

Item No.	Module	Configuration	Parameters[1)]	Diagnostics	Process data	
					Input	Output
		Bytes	Bytes	Bytes	Bytes	Bytes
1315220000	UR20-4DO-P	4		47	1	1
1315230000	UR20-4DO-P-2A	4		47	1	1
1394420000	UR20-4DO-PN-2A	4		47	1	1
1315240000	UR20-8DO-P	4		47	1	1
1509830000	UR20-8DO-P-2W-HD	4		47	1	1
1315250000	UR20-16DO-P	4		47	1	2
1315270000	UR20-16DO-P-PLC-INT	4		47	1	2
1315410000	UR20-4DO-N	4		47	1	1
1315420000	UR20-4DO-N-2A	4		47	1	1
1315430000	UR20-8DO-N	4		47	1	1
1315440000	UR20-16DO-N	4		47	1	2
1315450000	UR20-16DO-N-PLC-INT	4		47	1	2
2457250000	UR20-4DO-ISO-4A	4		47	1	1
2456530000	UR20-8DIO-P-3W-DIAG	4		47	2	1
1315540000	UR20-4RO-SSR-255	4		47	1	1
1315550000	UR20-4RO-CO-255	4		47	1	1
1315600000	UR20-2PWM-PN-0.5A	4		47	5	12
3036960000	UR20-2PWM-PN-0.5A-V2	4		47	5	12
1315610000	UR20-2PWM-PN-2A	4		47	5	12
3036950000	UR20-2PWM-PN-2A-V2	4		47	5	12
2697910000	UR20-2PWM-I-2.5A-2DI-P	4		47	9	6
2489830000	UR20-1SM-50W-6DI2DO-P	4		47	17	16
2705620000	UR20-2AI-UI-16	4		47	5	–
2566090000	UR20-2AI-UI-16-DIAG	4		47	5	–
1315620000	UR20-4AI-UI-16	4		47	9	–
1315690000	UR20-4AI-UI-16-DIAG	4		47	9	–
1993880000	UR20-4AI-UI-DIF-16-DIAG	4		47	9	–
2544660000	UR20-4AI-UI-DIF-32-DIAG	4		47	17	–
2566960000	UR20-4AI-UI-ISO-16-DIAG	4		47	9	–
1506920000	UR20-4AI-UI-16-HD	4		47	9	–
1506910000	UR20-4AI-UI-16-DIAG-HD	4		47	9	–
1394390000	UR20-4AI-UI-12	4		47	9	–
1529370000	UR20-8AI-I-16-DIAG	4		47	17	–
1315650000	UR20-8AI-I-16-HD	4		47	17	–
1315720000	UR20-8AI-I-16-DIAG-HD	4		47	17	–
1315670000	UR20-8AI-I-PLC-INT	4		47	17	–
1315700000	UR20-4AI-RTD-DIAG	4		47	9	–
2456540000	UR20-4AI-RTD-HP-DIAG	4		47	9	–
1315710000	UR20-4AI-TC-DIAG	4		47	9	–
3233190000	UR20-4AI-TC-CJT-DIAG	4		47	17	–

1) Each parameter is transferred individually by a SDO transfer (service data objects). For that reason there is no size limit, nevertheless every transfered parameter prolongs starting up the station.
2) Input process data and output process data must have the same value.

Coupler-dependent data width of I/O modules UR20-FBC-EC

Item No.	Module	Configuration	Parameters[1]	Diagnostics	Process data	
					Input	Output
		Bytes	Bytes	Bytes	Bytes	Bytes
2001670000	UR20-4AI-R-HS-16-DIAG	4		47	9	–
2828350000	UR20-4AI-I-HART-ISO-16	4		47	17	16
2555940000	UR20-8AI-RTD-DIAG-2W	4		47	17	–
3039320000	UR20-15AI-U-16-DIAG	4		47	10	1
1990070000	UR20-2AI-SG-24-DIAG	4		47	17	16
2007420000	UR20-3EM-230V-AC	4		47	17	16
2920830000	UR20-3EM-400V-AC-CT1A	4		47	33	8
2920840000	UR20-3EM-400V-AC-CT5A	4		47	33	8
2920850000	UR20-3EM-400V-AC-RC	4		47	33	8
2920860000	UR20-3EM-400V-AC-333mV	4		47	33	8
2705630000	UR20-2AO-UI-16	4		47	1	4
2566100000	UR20-2AO-UI-16-DIAG	4		47	1	4
2566970000	UR20-2AO-UI-ISO-16-DIAG	4		47	1	4
1315680000	UR20-4AO-UI-16	4		47	1	8
2453880000	UR20-4AO-UI-16-M	4		47	1	8
1315730000	UR20-4AO-UI-16-DIAG	4		47	1	8
2453870000	UR20-4AO-UI-16-M-DIAG	4		47	1	8
1510690000	UR20-4AO-UI-16-HD	4		47	1	8
1506930000	UR20-4AO-UI-16-DIAG-HD	4		47	1	8
1315570000	UR20-1CNT-100-1DO	4		47	13	10
1315590000	UR20-2CNT-100	4		47	13	12
1315580000	UR20-1CNT-500	4		47	13	10
1508080000	UR20-2FCNT-100	4		47	21	12
1508090000	UR20-1SSI	4		47	7	–
1315750000	UR20-1COM-232-485-422	4		47	17	16
2826800000	UR20-1COM-232-485-422-V2	4		47	20	19
2007430000	UR20-1COM-SAI-PRO	4		47	1	0
3116480000	UR20-1COM-SAI-PRO-V2	4		47	1	0
2489840000	UR20-1COM-CANOPEN	4		47	18, 34, 50, 64[2]	18, 34, 50, 64[2]
3040800000	UR20-1COM-CAN	4		47	16, 29, 63, 123[2]	15, 28, 62, 122[2]
1315740000	UR20-4COM-IO-LINK	See manual for UR20-4COM-IO-LINK communication module				
2819690000	UR20-4COM-IO-LINK-V2	See manual for UR20-4COM-IO-LINK communication module				
1529780000	UR20-4DI-4DO-PN-FSOE	4		47	6	6
1529800000	UR20-8DI-PN-FSOE	4		47	6	6
1335060000	UR20-4DI-4DO-PN-FSPS	–		–	–	–
1335070000	UR20-8DI-PN-FSPS	–		–	–	–
1335030000	UR20-PF-O-1DI-SIL	4		47	5	–
1335040000	UR20-PF-O-2DI-DELAY-SIL	4		47	5	–
1335050000	UR20-PF-O-2DI-SIL	4		47	5	–
max. data (in Byte)		1514 pro telegramm + CoE	1514 pro telegramm + CoE	1514 pro telegramm + CoE	1024	1024

1) Each parameter is transferred individually by a SDO transfer (service data objects). For that reason there is no size limit, nevertheless every transfered parameter prolongs starting up the station.
2) Input process data and output process data must have the same value.

5.4 Modbus TCP fieldbus coupler

ModbusTCP

The UR20-FBC-MOD-TCP and the UR20-FBC-MOD-TCP-V2 fieldbus coupler are Modbus TCP participants according to IEC 61158. As a head module of the u-remote system bus the coupler supports up to 64 active u-remote modules and up to 64 open multi-client connections.
The two Ethernet ports form an unmanaged 2-port switch that supports a line network structure. With the V2 coupler version the Dual LAN operation mode can be parameterised.
The coupler can be accessed with a system-independent web server application via the USB service interface or the Ethernet. Thus, all information, such as diagnostics, status values and parameters, can be read and all connected modules can be simulated or forced.
The station's main power supply is integrated in the coupler. Power is supplied via two 4-pole connectors, separated into the input and output current paths.

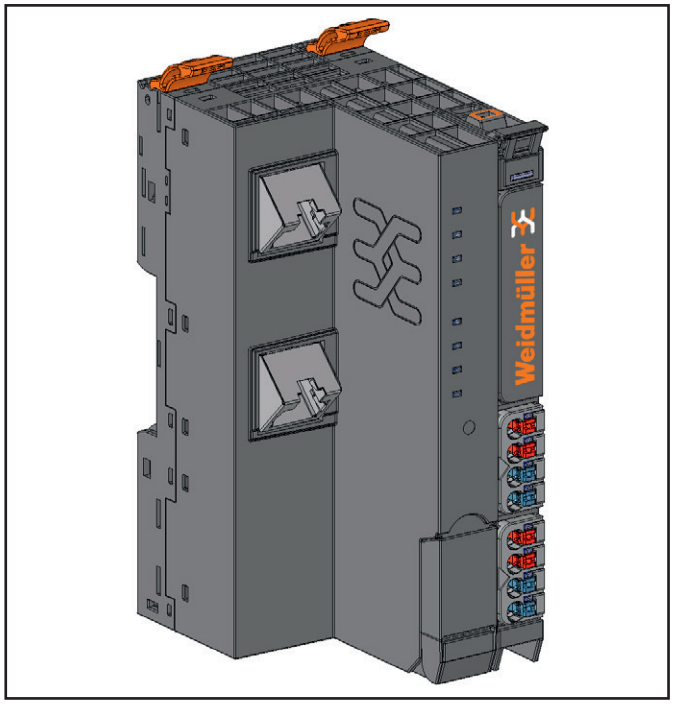

Fieldbus coupler UR20-FBC-MOD-TCP (Item No. 1334930000), UR20-FBC-MOD-TCP-V2 (Item No. 2476450000)

Status indicators

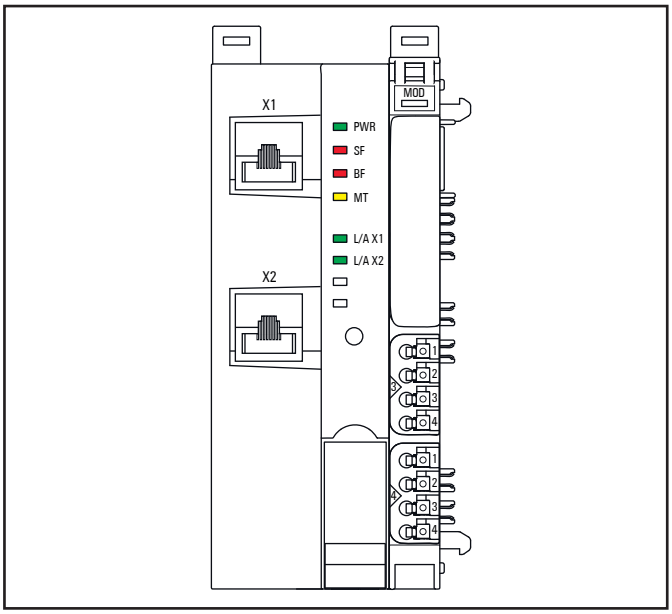

LED status indicators UR20-FBC-MOD-TCP, UR20-FBC-MOD-TCP-V2, troubleshooting see Chapter 12

PWR	Power LED	**Green**: Supply voltage connected **Red:** Coupler not yet started completely or hardware error
SF	Collective error	**Red:** Configuration error, or error in the coupler, or error in a module, or there is a new diagnostic message **Red flashing**: Station in Force mode
BF	Bus failure	**Red:** No connection to the fieldbus or watchdog time expired **Red flashing**: Configuration error, no connection to the control unit, or error in the parameter set, or firmware update is running or IP address conflict
MT	Maintenance	**Yellow**: Error on the system bus or fieldbus
L/A X1	Connection/active	**Green / Yellow**[1)]: Connection established between port 1 of the coupler and another field device **Green flashing / Yellow flashing**[1)]: Data being exchanged on port 1
L/A X2	Connection/active	**Green / Yellow**[1)]: Connection established between port 2 of the coupler and another field device **Green flashing / Yellow flashing**[1)]: Data being exchanged on port 2

1) Green: Transfer rate 100 MBit/s, Yellow: Transfer rate 10 MBit/s

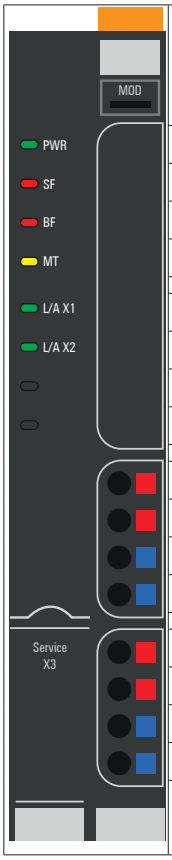

	Coupler power supply LED green: supply voltage >18 V red: at least one current path <18 V
3.1	Green: Input current path supply voltage > 18 V DC
3.2	Red: Input current path supply voltage < 18 V DC
3.4	Red: Internal fuse defective
4.1	Green: Output current path supply voltage > 18 V DC
4.2	Red: Output current path supply voltage < 18 V DC
4.4	Red: Internal fuse defective

LED indicators UR20-FBC-MOD-TCP, UR20-FBC-MOD-TCP-V2, troubleshooting see Chapter 12

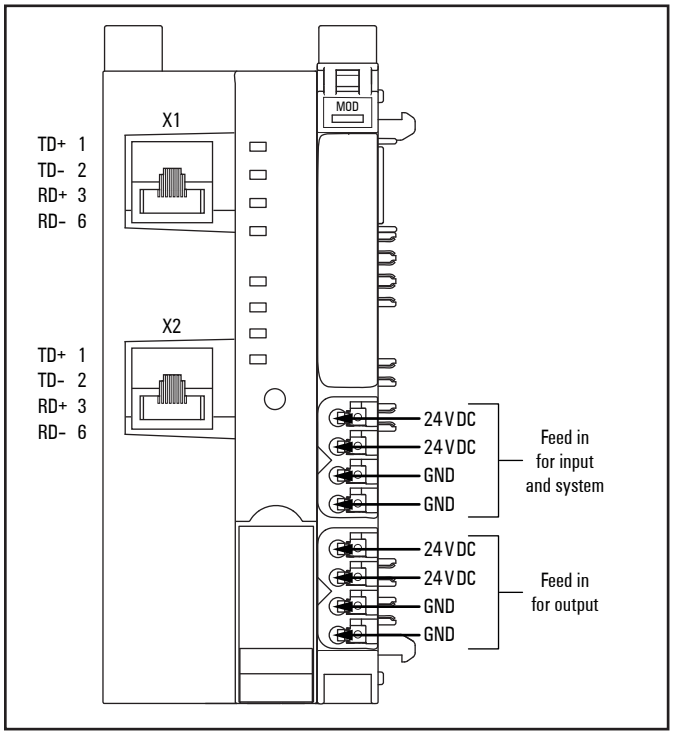

Connection diagram UR20-FBC-MOD-TCP, UR20-FBC-MOD-TCP-V2

ATTENTION

Risk of material damage!

In the case of a maximum power supply of >8 A and a maximum temperature of >+55 °C, all four contacts must be connected with 1.5 mm² wiring!

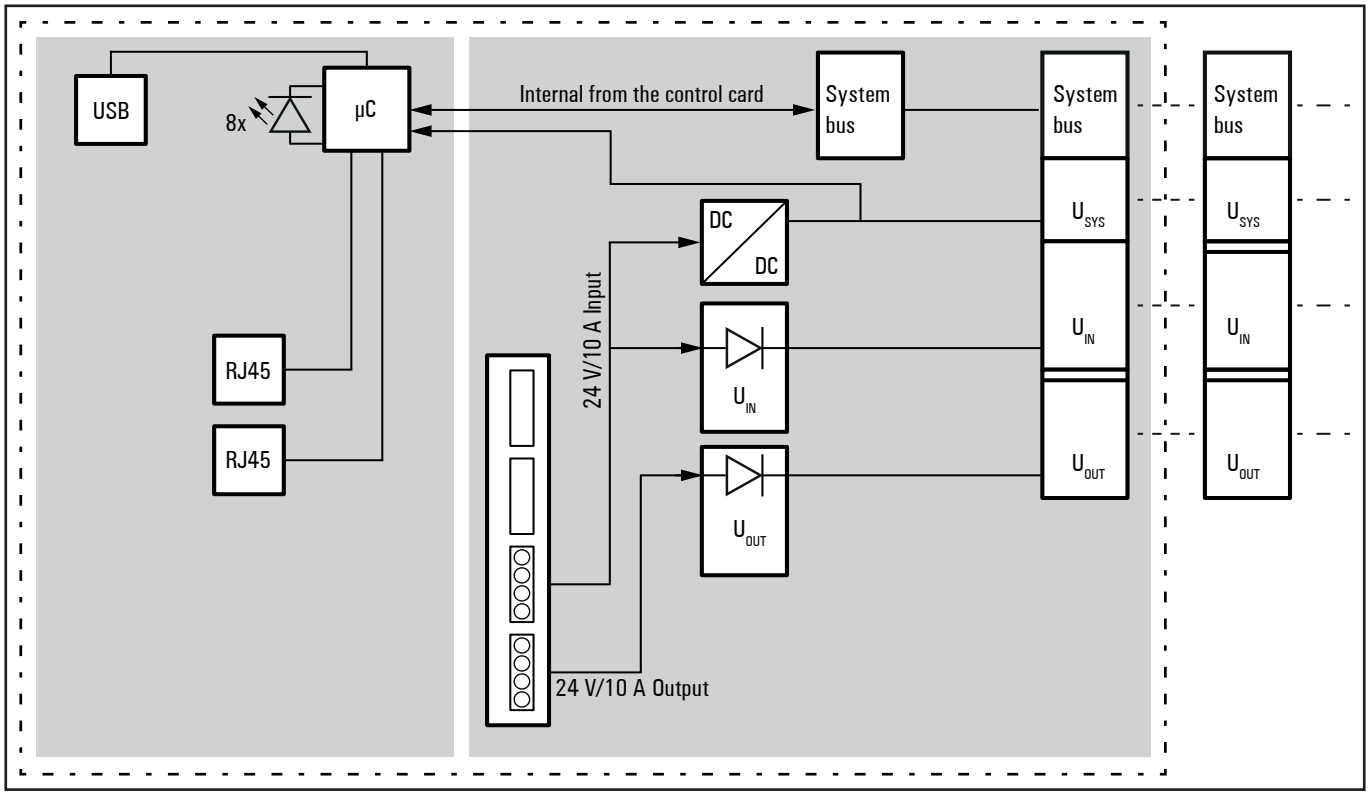

Block diagram UR20-FBC-MOD-TCP, UR20-FBC-MOD-TCP-V2

Technical data UR20-FBC-MOD-TCP (Item No. 1334930000), UR20-FBC-MOD-TCP-V2 (Item No. 2476450000)

System data		
Connection	2 x RJ-45	
Fieldbus protocol	Modbus TCP	
Open multi-client connections	max. 64	
Process data	max. 1 kByte	
Parameter data	max. 1 kByte	
Diagnostic data	max. 1 kByte	
Number of modules	max. 64 active	
Configuration interface	Micro USB 2.0	
Transfer rate	Fieldbus	10 Mbps/100 Mbps
	u-remote system bus	max. 48 Mbps
Supply		
Supply voltage for system and inputs	24 V DC +20 % / -15 %	
Supply voltage for outputs	24 V DC +20 % / -15 %	
Feed-in current[1] for input modules	max. 10 A	
Feed-in current[1] for output modules	max. 10 A	
Current consumption from system current path I_{SYS}	112 mA	
Temperature data[1]		
Fieldbus coupler V1	Operation (horizontal installation)	-20 °C to +60 °C / -4 °F ... +140 °F (2 x 8 A power supply) -20 °C to +55 °C / -4 °F ... +131 °F (2 x 10 A power supply)
	Operation (vertical installation)	-20 °C to +55 °C / -4 °F ... +131 °F (2 x 6 A power supply) -20 °C to +50 °C / -4 °F ... +122 °F (2 x 8 A power supply)
Fieldbus coupler V2	Operation (horizontal installation)	-20 °C to +60 °C / -4 °F ... +140 °F (2 x 10 A power supply)
	Operation (vertical installation)	-20 °C to +55 °C / -4 °F ... +131 °F (2 x 8 A power supply)
	Storage, transport	-40 °C to +85 °C / -40 °F ... +185 °F
Connection data		
Type of connection	"PUSH IN"	
Conductor cross-section	Single-wired, fine-wired	0.14 ... 1.5 mm² (AWG 26 ... 16)
Weight		
Weight (operational status)	223 g	
General data, see Section 3.2		

1) Restrictions for the use in potentially explosive atmosphere: Only horizontal installation and max. 8 A power supply!

The coupler provides only one alarm (process or diagnostic alarm) for each connected module at a time. Subsequent alarms of this module cannot be displayed until a pending alarm has been acknowledged. In the event that a pending alarm is not acknowledged in time the subsequent alarms will not be registered.

Configuration of the IP address

The web server can be used to define whether a static IP address shall be used or the address shall be assigned automatically (DHCP/BootP).
Coupler using firmware version 01.xx.xx are preset to the static IP address 192.168.0.222.
Coupler using firmware version 02.00.00 or higher will by default send a DHCP discover first. If no assigment by a DHCP server follows during the parameterised waiting time, the static IP address 192.168.0.222 will be set.

Overview of the editable parameters UR20-FBC-MOD-TCP, UR20-FBC-MOD-TCP-V2

Parameter	Optional values	Default
IP address[1)]	4 numbers between 0 and 255	192.168.0.222
Subnet mask[1)]	4 numbers between 0 and 255	255.255.255.0
Gateway[1)]	4 numbers between 0 and 255	192.168.0.1
Transmission rate port 1 Transmission rate port 2	Auto negotiation / 100 MBit/s FD / 100 MBit/s HD / 10 MBit/s FD / 10 MBit/s HD	Auto negotiation
Broadcast Frame Limit Port 1[2)] Broadcast Frame Limit Port 2[2)]	0 ... 255 fpw	8 fpw
IP configuration[1)]	Static, DHCP, BootP Firmware 02.00.00 and higher: additionally DHCP and static	Static (firmware 01.xx.xx) DHCP and static (firmware 02.00.00 or higher) see register 0x1124 – 0x1129 and 0x1140 – 0x1145 on page 79
Modbus DHCP timeout	Waiting time, 1 to 1000 s	30 s
Additional TCP port[2)]	0 (disabled) / Value from 1 to 65535 (except for 80 and 161)	0
Modbus Dual LAN Mode (V2 only)[3)]	disabled / enabled	disabled
Modbus transport protocol[3)]	TCP / UDP	TCP
IP address USB port[3)]	192.168.1.202, 192.168.2.202, 192.168.3.202 ... 192.168.20.202	192.168.1.202
Web server via Ethernet[3)]	disabled / enabled	enabled
Modbus watchdog	Watchdog time in steps of 10 ms	0 *10 ms, see register 0x1120 on page 79
Modbus connection timeout	Connection watchdog time in sec	1 s, see register 0x1131 on page 80
Writing access in multi-client operation	for all connections, for client with first write access, for client with first connection	for all connections, see register 0x1130 on page 80
Check reference list before data exchange	disabled / enabled	disabled, see register 0x1132 on page 80
Process alarm	disabled / enabled	disabled, see register 0x1133 on page 80
Diagnostic alarm	disabled / enabled	disabled, see register 0x1134 on page 80
Output behaviour on fieldbus error[2)]	All outputs off / Enable substitute value / Hold last value	All outputs off, see register 0x1135 on page 80
Module behaviour on hot swap	Continue data exchange / Behaviour like fieldbus error	Continue data exchange, see register 0x1136 on page 80
Data format	Motorola / Intel	Motorola, see register 0x1137 on page 80
Lock force mode	Force mode unlocked / Force mode locked	Force mode unlocked, see register 0x1122 on page 79
HTTPS setting (V2 only)	HTTP & HTTPS concurrent operation / only HTTPS; no HTTP	HTTP & HTTPS concurrent operation

1) In Dual LAN mode (V2 only) parameterisable for each ethernet port; 2) See description below; 3) Change requires restart of the coupler

Parameter "Broadcast Frame Limit"

The limit is defined as frames per window (fpw). A time window is 100 ms at 10M bit/s and 10 ms with100 Mbit/s.

Parameter "Additional TCP port"

Another TCP port additionally to the standard port (502) can be enabled using this parameter. Every number from 1 to 65535 can be used, apart from:

- TCP: 80 (reserved for http), 161 (reserved for SNMP), 443 (reserved for https), 502 (standard TCP port, already in use)
- UDP: 53 (reserved for DNS), 67, 68 (reserved for BootP and DHCP), 161 (reserved for SNMP), 502 (standard UDP port, already in use)

Value 0 deactivates the port. The standard port 502 will remain open in any case.

Parameter "Modbus Dual LAN Mode" (V2 only)

In Dual LAN mode, the fieldbus coupler communicates with two synchronised control units simultaneously. Thereby both control units have the complete reading and writing access. With this parameter enabled, the two Ethernet ports are reconfigured into two separate network ports. MAC addresses are automatically assigned to both ports. After restarting the coupler, an additional input mask for the coupler parameters is displayed in the web server, in which the second IP address must be specified.

ATTENTION

Risk of a network loop that can lead to a network failure!

The "Modbus Dual LAN Mode" parameter is deactivated and the 2-port switch is active at delivery.

► Activate the parameter first and then connect the coupler to the network.

Parameter „Modbus transport protocol"

This parameter can be used to determine whether the fieldbus coupler shall be addressed via TCP or UDP. A Modbus connection via the other protocol is not possible. This change only affects the standard port 502 and any port set under „Additional TCP port".

Parameter "Output behaviour on fieldbus error"

With active reference list mode the setting of this parameter has the same impact also on reference list errors.

Implemented modbus functions

Function code no.	Function	Description	See also table
1 (0x01)	Read Coils	Reading of multiple output bits	Bit addresses
2 (0x02)	Read Discrete Inputs	Reading of multiple input bits	Bit addresses
3 (0x03)	Read Holding Registers	Reading of multiple holding registers	Register addresses
4 (0x04)	Read Input Registers	Reading of multiple input registers	Register addresses
5 (0x05)	Write Single Coil	Writing of one output bit	Bit addresses
6 (0x06)	Write Single Registers	Writing of one holding register	Register addresses
15 (0x0F)	Write Multiple Coils	Writing of multiple output bits	Bit addresses
16 (0x10)	Write Multiple Registers	Writing of multiple holding registers	Register addresses
22 (0x16)	Mask Write Register	Bitwise modifying of one holding register	Register addresses
23 (0x17)	Read/Write Multiple Registers	Reading and writing of multiple holding registers simultaneously	Register addresses
43 (0x2B)	Read Multiple Registers	Reading of vendor specific product information	Register addresses

Bit addresses for the use with function codes 1, 2, 5, 15

Bit address		Access	Data width	Description	Remarks
hex	dez				
0x0000 – 0x1FFF	0 –8191	ro	Module dependent	Packed process data of inputs	Byte-granular
0x8000 – 0x9FFF	32768 – 40959	rw	Module dependent	Packed process data of outputs	Byte-granular

Register addresses for the use with function codes 3, 4, 6, 16, 22, 23

Register address		Access	Data width	Description	Remarks
hex	dec				
0x0000 – 0x01FF	0 – 511	ro	Module-dependent	Packed process data for inputs	byte granularly
0x0800 – 0x09FF	2048 – 2559	rw	Module-dependent	Packed process data for outputs	byte granularly
0x1000 – x100B	4096 – 4107	ro	Byte	Coupler identifier	
0x100C	4108	ro	Word	Coupler status	Bit assignment see register 0x100C on page page 78
0x100D	4109	ro	Word	Life Signal	16 bit counter, 1 ms tick
0x100E	4110	ro	Wort	Port Link Status	Bit assignment see register 0x100E on page page 78
0x1010	4112	ro	Word	Process image length in bits for the output modules	
0x1011	4113	ro	Word	Process image length in bits for the input modules	
0x1017	4119	ro	Word	Register mapping revision	
0x1018 – 0x101B	4120 – 4123	ro	Byte	Collective diagnostics message for I/O modules (1 bit per I/O module)	
0x101C – 0x101F	4124 – 4127	ro	Byte	Collective process alarm message for I/O modules (1 bit per I/O module)	
0x1020 – 0x1027	4128 – 4135	ro	Byte	Coupler serial number	
0x1028 – 0x102F	4136 – 4143	ro	Byte	Module status (2 bits per I/O module), 00 = module O.K., 01 = module error, 10 = incorrect module 11 = module not plugged in	Structure as in PROFIBUS module status
0x1030	4144	ro	Word	Modbus watchdog, current time (x*10 ms) 0 = watchdog has expired, 0xFFFF = watchdog deactivated	Time still remaining for monitoring the exchange of process data
0x1031	4145	ro	Word	CPU temperature	in 1/10 degree Celsius
0x1120	4384	rw	Word	Modbus watchdog, predefined time (x*10 ms), default = 0 ms (no watchdog active)	Time for monitoring the exchange of process data. The value of the elapsed watchdog time is reset to the start value with each setting of the watchdog time. Therefore this register is not suitable for cyclic write access. For more information see page 79
0x1121	4385	rw	Word	Data exchange Modbus watchdog, reset register Bit 0 = 1: watchdog reset at predefined time Bit 8 = 1: restart after expired watchdog	Function requires rising edge (changing from 0 to 1) at the respective bit Bit 0: reset watchdog while it is running (retrigger) Bit 8: restart of expired watchdog For more information see page 79

Register addresses for the use with function codes 3, 4, 6, 16, 22, 23

Register address hex	Register address dec	Access	Data width	Description	Remarks
0x1122	4386	rw	DWord	Lock of the force mode via webserver	„LOCK“ to lock, „FREE“ to unlock
0x1124 - 0x1125	4388 - 4389	rw	Long	Changing IP address 1 via fieldbus	
0x1126 - 0x1127	4390 - 4391	rw	Long	Changing subnet mask 1 via fieldbus	
0x1128 - 0x1129	4392 - 4393	rw	Long	Changing gateway 1 via fieldbus	
0x1130	4400	rw	Word	Writing access in multi-client operation	
0x1131	4401	rw	Word	Modbus connection timeout in seconds Default = 1 (0 = dectivated)	
0x1132	4402	rw	Word	Check the reference list before data exchange 0x0000 = disabled, 0x0001 = enabled	
0x1133	4403	rw	Word	Process alarm 0x0000 = disabled, 0x0001 = enabled	
0x1134	4404	rw	Word	Diagnostic alarm 0x0000 = disabled, 0x0001 = enabled	
0x1135	4405	rw	Word	Output behaviour on fieldbus error 0x0000 = all outputs off 0x0001 = enable substitute values 0x0002 = hold last value	
0x1136	4406	rw	Word	Module behaviour on hot swap 0x0000 = continue data exchange 0x0001 = behaviour as on fieldbus error	
0x1137	4407	rw	Word	Data format 0x0000 = Motorola, 0x0001 = Intel	
0x113C - 0x113D	4412 - 4413	wo	DWord	Load default module parameters Motorola =“LOAD”, Intel =“DAOL”	
0x113E - 0x113F	4414 - 4415	wo	DWord	Save module parameters Motorola =“SAVE”, Intel =“EVAS”	
0x1140 - 0x1141	4416 - 4417	rw	Long	Changing IP address 2 via fieldbus	The registers for the second network connection are only available with coupler version V2.
0x1142 - 0x1143	4418 - 4419	rw	Long	Changing subnet mask 2 via fieldbus	
0x1144 - 0x1145	4420 - 4421	rw	Long	Changing gateway 2 via fieldbus	
0x1146	4422	rw	Word	Port 1 link setting 0=Autonegotiation, 1=100 MBit/s Full Duplex, 2=100 MBit/s Half Duplex, 3=10 MBit/s Full Duplex, 4=10 MBit/s Half Duplex	
0x1147	4423	rw	Word	Port 2 link setting 0=Autonegotiation, 1=100 MBit/s Full Duplex, 2=100 MBit/s Half Duplex, 3=10 MBit/s Full Duplex, 4=10 MBit/s Half Duplex	
0x1148	4424	rw	Word	DHCP setting, 0=Static, 1=DHCP, 2=BootP, 3=DHCP and static	
0x1149	4425	rw	Word	DHCP setting second network interface in Dual LAN mode, 0=Static, 1=DHCP, 2=BootP, 3=DHCP and static	only available with coupler version V2
0x114A	4426	rw	Word	Modbus DHCP timeout, used with setting ”DHCP and static”, 1-1000 seconds	
0x114B	4427	rw	Word	Additional TCP port: 0=deactivated, 1-0xFFFF=additional Port	following ports are not allowed: with TCP: 80, 161, 443, 502 with UDP: 53, 67, 68, 161, 502
0x114C	4428	rw	Word	Modbus Dual LAN mode 0=deactivated, 1=activated	only available with coupler version V2
0x114D	4429	rw	Word	Modbus transport protocol, 0=TCP, 1=UDP	

Register addresses for the use with function codes 3, 4, 6, 16, 22, 23

Register address hex	Register address dec	Access	Data width	Description	Remarks
0x114E	4430	wo	Word	USB IP address 0=no change, 1=second entry of the selection field in the web application, 2=third entry, ..., 19=twentieth entry	
0x114F	4431	rw	Word	Webserver via Ethernet, 0=deactivated, 1=activated	
0x1150	4432	rw	Word	HTTPS setting, 0=HTTP+HTTPS, 1=only HTTPS	
0x1160	4448	rw	Byte	Broadcast Frame Limit Port 1 0 = Broadcast Frame Limit disabled, Default = 8	only available with coupler version V2
0x1161	4449	rw	Byte	Broadcast Frame Limit Port 2 0 = Broadcast Frame Limit disabled, Default = 8	only available with coupler version V2
0x27FE	10238	ro	Word	Number of entries in the current module list	
0x27FF	10239	ro	Word	Number of entries in the reference list	
0x2800 – 0x287F	10240 – 10367	rw	DWord	Reference list (max. 64 modules per station * 2 registers per module)	Always 2 registers per module must be transferred
0x2A00 – 0x2A7F	10752 – 10879	ro	DWord	Current module list (max. 64 modules per station * 2 registers per module)	Always 2 registers per module must be transferred
0x2B00 – 0x2B7F	11008 – 11135	ro	Word	Modul offsets of packed process data	
0x8000 – 0x87FF	32768 – 34815	ro	Module	Process data inputs (max. 64 modules per station * 32 registers per module)	
0x9000 – 0x97FF	36864 – 38911	rw	Module	Process data outputs (max. 64 modules per station * 32 registers per module)	
0xA000 – 0xA7FF	40960 – 43007	ro	Byte	Diagnostics (max. 64 modules per station * 32 registers per module)	Confirmation by readout
0xB000 – 0xB7FF	45056 – 47103	ro	Byte	Process alarms (max. 64 modules per station * 32 registers per module)	Confirmation by readout
0xC000 - 0xC7FF (01.xx.xx)	49152 – 51199	rw	Byte	Module parameters Firmware 01.xx.xx: max. 64 modules per station * 32 registers per module	
0xC000 - 0xFFFF (02.00.00 or higher)	49152 – 65535	rw	Byte	Module parameters Firmware 02.00.00 or higher: max. 64 modules per station * 256 registers per module)	

Register addresses for the use with function code 43

hex	dec	Access	Data width	Description	Remark
0	0	ro	Word	VendorName	Weidmueller
1	1	ro	Word	ProductCode	2476450000
2	2	ro	Word	MajorMinorRevision	Vxx.xx
3	3	ro	Word	VendorUrl	www.weidmueller.com
4	4	ro	Word	ProductName	WI-UR20-FBC
5	5	ro	Word	ModelName	UR20-FBC-MOD-V2
6	6	ro	Word	UserApplicationName	SWID:APPL | SWID:CUS
7-7F	7 – 127	ro	Word	Reserved	
80	128	ro	Word	Appl Version	String : V Major . Minor . Patch - Example V02.07.255
81	129	ro	Word	Cus Version	String : V Major . Minor . Patch - Example V01.09.255
82	130	ro	Word	FSBL Version	String : V Major . Minor . Patch - Example V01.08.91
83	131	ro	Word	SSBL Version	String : V Major . Minor . Patch - Example V01.08.91
84	132	ro	Word	HW Version	String : V Major . Minor . Patch - Example V01.00.00
85	133	ro	Word	Serial Number	String : Example 0120150706108224
86	134	ro	Word	Module Count	Number of connected modules : Example 01
87-BF	135 – 191	ro	Word	Reserved	
C0	192	ro	Word	Module 1 Information	Module Information string : ID , Name , Order Nr , Serial Nr , Hardware Version , Firmware Version , MX File Version.
C1	193	ro	Word	Module 2 Information	Example : 0x0E81276D,UR20-4COM-IO-LINK,1315740000,0123456789012345, 01.00.00,01.03.00,MX003713.102
C2 – FF	194 – 255	ro	Word	Module 3-64 Information	The fields are separated by commas.

Packed process data

Packed input process data

Input register range: 0x0000 to 0x01FF

Access to all 512 registers is always possible regardless of the I/O structure. Unused registers respond with “0”.

Packed output process data

Output register range: 0x0800 to 0x09FF

Access to all 512 registers is always possible regardless of the I/O structure. Unused registers send “0” during a read access, write accesses are ignored.

Example of an optimal module arrangement

Product	Input data	Output data	Number of input registers	Number of output registers	Remarks
UR20-FBC-MOD	–	–	0	0	
UR20-4AO-UI	–	8 Byte	0	4	allocates 4 registers
UR20-4AI-UI	8 Byte	–	4	0	allocates 4 registers
UR20-4DI-P	1 Byte	–	1/2	0	allocates low byte of a register
UR20-8DI-x	1 Byte	–	1/2	0	allocates high byte of a register
UR20-16DI-x	2 Byte	–	1	0	allocates 1 register
Total			6	4	

Example of a suboptimal module arrangement

Product	Input data	Output data	Number of input registers	Number of output registers	Remarks
UR20-FBC-MOD	–	–	0	0	
UR20-4DI-P	1 Byte	–	1	0	allocates 1 register
UR20-4AO-UI	–	8 Byte	0	4	allocates 4 registers
UR20-4AI-UI	8 Byte	–	4	0	allocates 4 registers
UR20-8DI-x	1 Byte	–	1	0	allocates 1 register
UR20-16DI-x	2 Byte	–	1	0	allocates 1 register
Total			7	4	

Structure of packed process data

The byte granularly packed process data contains all input data (register range 0x0000 to 0x01FF) and output data (register range 0x0800 to 0x09FF) of the u-remote station.

The start address(es) of each module's process data are listet in register 0x2B00 – 0x2B7F (see section "Module offsets of process data" on page 82).

Process data is mapped according to the modules are arranged. To avoid larger gaps in the process data, the different modules should be arranged in an optimal manner.

Coupler-dependent data width of I/O modules[1] UR20-FBC-MOD-TCP, UR20-FBC-MOD-TCP-V2

Item No.	Module	Process data	
		Input	Output
		Byte	Byte
1315170000	UR20-4DI-P	1	–
2009360000	UR20-4DI-P-3W	1	–
1315180000	UR20-8DI-P-2W	1	–
1394400000	UR20-8DI-P-3W	1	–
1315190000	UR20-8DI-P-3W-HD	1	–
1315200000	UR20-16DI-P	2	–
1315210000	UR20-16DI-P-PLC-INT	2	–
1460140000	UR20-2DI-P-TS	1	–
1460150000	UR20-4DI-P-TS	1	–
1315350000	UR20-4DI-N	2	–
1315370000	UR20-8DI-N-3W	2	–
1315390000	UR20-16DI-N	1	–
1315400000	UR20-16DI-N-PLC-INT	1	–
1550070000	UR20-4DI-2W-230V-AC	1	–
2457240000	UR20-8DI-ISO-2W	1	–
1315220000	UR20-4DO-P	-	1
1315230000	UR20-4DO-P-2A	-	1
1394420000	UR20-4DO-PN-2A	-	1
1315240000	UR20-8DO-P	-	1
1509830000	UR20-8DO-P-2W-HD	-	1
1315250000	UR20-16DO-P	-	2
1315270000	UR20-16DO-P-PLC-INT	-	2
1315410000	UR20-4DO-N	-	1
1315420000	UR20-4DO-N-2A	-	1
1315430000	UR20-8DO-N	-	1
1315440000	UR20-16DO-N	-	2
1315450000	UR20-16DO-N-PLC-INT	-	2
2457250000	UR20-4DO-ISO-4A	-	1
2456530000	UR20-8DIO-P-3W-DIAG	1	1
1315540000	UR20-4RO-SSR-255	–	1
1315550000	UR20-4RO-CO-255	–	1
1315600000	UR20-2PWM-PN-0.5A	4	12
3036960000	UR20-2PWM-PN-0.5A-V2	4	12
1315610000	UR20-2PWM-PN-2A	4	12
3036950000	UR20-2PWM-PN-2A-V2	4	12
2697910000	UR20-2PWM-I-2.5A-2DI-P	8	6
2489830000	UR20-1SM-50W-6DI2DO-P	16	16
2705620000	UR20-2AI-UI-16	4	–
2566090000	UR20-2AI-UI-16-DIAG	4	–

1) Listed are only supported modules, see table **Combinability of UR20 fieldbus couplers with I/O modules** in the Annex.

Coupler-dependent data width of I/O modules[1] UR20-FBC-MOD-TCP, UR20-FBC-MOD-TCP-V2

Item No.	Module	Process data	
		Input	Output
		Byte	Byte
1315620000	UR20-4AI-UI-16	8	–
1315690000	UR20-4AI-UI-16-DIAG	8	–
1993880000	UR20-4AI-UI-DIF-16-DIAG	8	–
2544660000	UR20-4AI-UI-DIF-32-DIAG	16	–
2566960000	UR20-4AI-UI-ISO-16-DIAG	8	–
1506920000	UR20-4AI-UI-16-HD	8	–
1506910000	UR20-4AI-UI-16-DIAG-HD	8	–
1394390000	UR20-4AI-UI-12	8	–
1529370000	UR20-8AI-I-16-DIAG	16	–
1315650000	UR20-8AI-I-16-HD	16	–
1315720000	UR20-8AI-I-16-DIAG-HD	16	–
1315670000	UR20-8AI-I-PLC-INT	16	–
1315700000	UR20-4AI-RTD-DIAG	8	–
2456540000	UR20-4AI-RTD-HP-DIAG	8	–
1315710000	UR20-4AI-TC-DIAG	8	–
3233190000	UR20-4AI-TC-CJT-DIAG	16	–
2001670000	UR20-4AI-R-HS-16-DIAG	8	–
2617520000	UR20-4AI-I-HART-16-DIAG	16	16
2828350000	UR20-4AI-I-HART-ISO-16	16	16
2555940000	UR20-8AI-RTD-DIAG-2W	16	–
3039320000	UR20-15AI-U-16-DIAG	9	1
1990070000	UR20-2AI-SG-24-DIAG	16	16
2007420000	UR20-3EM-230V-AC	16	16
2920830000	UR20-3EM-400V-AC-CT1A	32	8
2920840000	UR20-3EM-400V-AC-CT5A	32	8
2920850000	UR20-3EM-400V-AC-RC	32	8
2920860000	UR20-3EM-400V-AC-333mV	32	8
2705630000	UR20-2AO-UI-16	-	4
2566100000	UR20-2AO-UI-16-DIAG	-	4
2566970000	UR20-2AO-UI-ISO-16-DIAG	–	4
1315680000	UR20-4AO-UI-16	–	8
1315730000	UR20-4AO-UI-16-DIAG	–	8
1510690000	UR20-4AO-UI-16-HD	–	8
1506930000	UR20-4AO-UI-16-DIAG-HD	–	8
1315570000	UR20-1CNT-100-1DO	12	10
1315590000	UR20-2CNT-100	12	12
1315580000	UR20-1CNT-500	8	10
1508080000	UR20-2FCNT-100	20	12

1) Listed are only supported modules, see table **Combinability of UR20 fieldbus couplers with I/O modules** in the Annex.

Coupler-dependent data width of I/O modules[1] UR20-FBC-MOD-TCP, UR20-FBC-MOD-TCP-V2

Item No.	Module	Process data	
		Input	Output
		Byte	Byte
1508090000	UR20-1SSI	6	–
1315750000	UR20-1COM-232-485-422	16	16
2826800000	UR20-1COM-232-485-422-V2	19	19
2007430000	UR20-1COM-SAI-PRO	–	–
3116480000	UR20-1COM-SAI-PRO-V2	–	–
2489840000	UR20-1COM-CANOPEN	3 – 128	3 – 128
3040800000	UR20-1COM-CAN	3 – 122	3 – 122
1335030000	UR20-PF-O-1DI-SIL	4	–
1335040000	UR20-PF-O-2DI-DELAY-SIL	4	–
1335050000	UR20-PF-O-2DI-SIL	4	–

1) Listed are only supported modules, see table **Combinability of UR20 fieldbus couplers with I/O modules** in the Annex.

0x1000 – 0x100B (4096 - 4107) Coupler identifier
The identifier is the "product designation": UR20-FBC-MOD.

0x100C (4108) Coupler status

Bit	Name	Meaning
0	Summarized module diagnosis	A diagnosis is available on at least one module with diagnostics functionality.
1	Pending	More than one electronic unit or module has been removed from the station.
2	Errorbit 2	Reserve bit 2, currently not used
3	Systembus error	Error on system bus. Communication with the connected modules is disrupted.
4	Errorbit 4	Reserve bit 4, currently not used
5	Errorbit 5	Reserve bit 5, currently not used
6	I/O-Configuration error	Differing configuration. The module list has changed. The list of configured modules (reference list 0x2800 – 0x287F) differs from the module list detected by the coupler (current module list 0x2A00 – 0x2A7F).
7	Master configuration error	Master configuration error. The station contains modules which are not supported by the coupler (see data width table).
8	Register access error	Access on invalid Modbus register. Reading out 0x100C resets the error bit.
9	Errorbit 9	Reserve bit 9, currently not used
10	Force mode active	Force mode was activated via the web server. Forced channels do not exchange data with the master.
11	Errorbit 11	Reserve bit 11, currently not used
12	Errorbit 12	Reserve bit 12, currently not used
13	Voltage U_{OUT} error	Error in the supply voltage of outputs
14	Voltage U_{IN} error	Error in the supply voltage of system and inputs
15	Errorbit 15	Reserve bit 15, currently not used

0x100D (4109) Life Signal

0x100E (4110) Port Link Status
Bit 0: Port 1 Link Status (1 Link up, 0 Link down)
Bit 1: Port 2 Link Status (1 Link up, 0 Link down)

0x1010 (4112) Process image length in bits for the output modules

0x1011 (4113) Process image length in bits for the input modules

0x1017 (4119) Register – mapping revision
Version of the register structure

0x1018 – 0x101B (4120 - 4123) Collective diagnostics message for I/O modules
If a diagnostic alarm is activated (register 0x1134) and there is a diagnostic message for a module, it is indicated here with a set bit. A module's slot position corresponds to its position in the 64-bit data field (minus passive modules without slot recognition). Example: 0x0000 0000 0000 0002 = There is a diagnostic alarm for module 2.
Reading the module's diagnostic memory (0xAXXX) confirms the diagnosis and resets the corresponding bit. In case of multiple diagnoses for one module, only the most up-to-date diagnosis is displayed. The next diagnostic is then placed in a wait loop and only becomes active once the current one has been confirmed.

0x101C – 0x101F (4124 - 4127) Collective process alarm message for the I/O modules
If a process alarm is activated (register 0x1133) and there is an alarm for a module, this is indicated here with a set bit. A module's slot position corresponds to its position in the 64-bit data field (minus passive modules without slot recognition). Example: 0x0000 0000 0000 0002 = There is a process alarm for module 2.

Reading the module's process alarm memory (0xBXXX) confirms the alarm and resets the corresponding bit. In case of multiple process alarms for one module, only the latest alarm is displayed. The next alarm is then placed in a wait loop and only becomes active once the current one has been confirmed.

0x1028 – 0x102F (4136 - 4143) Module status

The module status (2 bits per module) of each detected module is displayed in the corresponding bit position of the 128 bits.

0 0 Valid data from this module
0 1 Invalid data, faulty module
1 0 Invalid data, incorrect module
1 1 Invalid data, missing module

There is no differentiation between fully functional modules and empty slots (both status "0 0"). Please check the reference list (0x1132) or read the number of entries in the current module list (0x27FE) to make sure that all modules have been detected.

0x1030 (4144) MODBUS DATA EXCHANGE watchdog, current time

Amount of time (input value * 10 ms) still remaining on the active watchdog to monitor the exchange of process data.
If a 0 is read, the watchdog has expired and must be restarted.
If 0xFFFF is read, the watchdog is deactivated.

If the ethernet link is interrupted (and reconnected again) or if the modbus connection timeout has expired while the watchdog is active, then the register 0x1030 is set to 0xFFFF and the BF LED lights red, because the bus communication is stopped.
To reactivate the bus communication, there are two options:
► Write a value in register 0x1120.
or
► Set bit 8 of register 0x1121 true (rising edge).
When the watchdog has expired, only bit 8 of register 0x1121 can reset the watchdog.

0x1120 (4384) Status Modbus watchdog, predefined time

In this register, the watchdog is activated/deactivated and the watchdog time is set. Output process data can be exchanged as long as the watchdog is deactivated or it is activated and still running. Input process data can still be read. Each write access causes the reset and restart of the watchdog. The length is calculated with the input value * 10 ms. Entering 0 deactivates the watchdog. Writing the value 0xFFFF in register 0x1120 does **not** deactivate the watchdog

0x1121 (4385) Data exchange Modbus watchdog Reset Register

With a rising edge at Bit 0 in this register the predefined time is loaded into the watchdog time (watchdog reset). To continue the process data exchange with activated watchdog this bit has to be toggled from 0 to 1 once during each watchdog cycle within the defined time.
With a rising edge at Bit 8 in this register an expired watchdog (value 0 in register 0x1030) is reactivated.

0x1122 (4386) Lock force mode on web server

In default setting the force mode can be enabled via the web server (after Login).
The force mode can be locked by writing the double word "LOCK" (0x4C4F, 0x434B). Writing of "FREE" (0x4652, 0x4545) will unlock the force mode again.
Reading 0x00000100 from this register indicates that the force mode is locked via web server. Reading 0x00000000 from this register indicates that the force mode is unlocked via web server.

0x1124 – 0x1125 (4388 - 4389) and 0x1140 – 0x1145 (4416 - 4421) Changing the IP address via fieldbus

The IP address can be displayed and changed via fieldbus. Example:

IP address decimal	192	168	10	100
IP address hexadecimal	C0	A8	A	64
Input in register no.	**0x1124**		**0x1125**	
hexadecimal	C0A8		A64	
decimal	49320		2660	

To prevent the IP address from being changed accidentally, a change is only possible according to the procedure described below.

Example: The address shall be changed from 192.168.1.1 to 192.168.2.1.

1. Change the subnet mask (e.g. to 255.255.0.0) in register 0x1126 – 0x1127.
2. Change the IP address (e.g. to 192.168.2.1) in register 0x1124 – 0x1125.
3. Change the gateway (e.g. to 192.168.2.x) in register 0x1128 – 0x1129.
4. Change back the subnet mask (to 255.255.255.0) in register 0x1126 – 0x1127.

0x1126 – 0x1127 (4390 - 4391) Changing the subnet mask via fieldbus

The subnet mask can be displayed and changed via fieldbus (input analogue example IP address).

0x1128 – 0x1129 (4392 - 4393) Changing the gateway via fieldbus

The gateway can be displayed and changed via fieldbus (input analogue example IP address)..

0x1130 (4400) Writing access in multi-client operation

Bit	Name/Description
2 to 15	**reserved**
1	**MB_ImmediateWritePermission**
	– 0: During the first write access, write authorisation is requested for the corresponding modbus connection. If this is not successful, an exception response with the exception code 0x01 is generated. If it is successful, the write access is executed and write authorisation remains in effect until the end of the connection. – 1: Write authorisation for the corresponding modbus connection is already requested when the connection is being established. As a result, the first modbus connection receives the write authorisation, and nothing happens for all those that follow (as long as Bit 0 = 1).
0	**MB_OnlyOneWritePermission**
	– 0: All modbus connections have write authorisation – 1: In all cases only one modbus connection can be assigned write authorisation. Once assigned, write authorisation is retained until there is a disconnect. After the connection that has write authorisation is disconnected, the next connection which attempts write access receives write authorisation.

0x1131 (4401) Modbus connection timeout in seconds

This register determines after which time an inactive modbus connection will be disconnected. If the value in this register is set to 0 the connection timeout will be deactivated.

0x1132 (4402) Check reference list prior to data exchange

If the value in this register is set to 0, the data exchange begins without checking the reference list (0x2800 and the following) against the current module list (0x2A00 and the following). In this case the reference list does not need to be created.

If the value in this register is set to 1, the data exchange only starts if the reference list (0x2800 and the following) matches the current module list (0x2A00 and the following). As long as both lists do not match the fieldbus coupler reacts like on a fieldbus error (0x1135).

0x1133 (4403) Process alarm

If the value in this register is set to 0, process alarms are reported, but it is not necessary to confirm or read them.
If the value in this register is set to 1, process alarms are reported and they must be confirmed by reading the corresponding register.

0x1134 (4404) Diagnostic alarm

If the value in this register is set to 0, the diagnostic alarm is deactivated. Pending diagnostics do not have any effect on the exchange of process data and must not be confirmed. They are, however, displayed locally on the UR20 hardware with red LEDs (SF and module) and also can be read in the module-specific diagnostic registers 0xAXXX.
If the value in this register is set to 1, diagnostics alarms are reported, and they must be confirmed by reading the corresponding register.

0x1135 (4405) Field bus or reference list error behaviour

The value in this register defines the output behaviour on fieldbus or reference list error.

Value	Behaviour of outputs
0	All outputs are set to 0.
1	All outputs are set to the substitute values.
2	All outputs are held at the last process value.

0x1136 (4406) Module removal behaviour

If the value in this register is set to 0, the exchange of process data continues.
If the value in this register is set to 1, the behaviour during a field bus error is used.

0x1137 (4407) Data format

If the value in this register is set to 0, data is transferred in Motorola format.
If the value in this register is set to 1, data is transferred in Intel format.

0x113C – 0x113F (4412 - 4413) Save module parameters

Load default module parameters (0x113C – 0x113D) loads the default parameter set of all modules (LOAD). Previously saved parameters are deleted.

Save module parameters (0x113E – 0x113F) stores the current values of all module parameters in the coupler (SAVE). Subsequent changes will not be considered unless they are saved again. There is no need to enter parameters again after restarting the coupler.
Input in both register in the **Motorola** format follow this scheme:

	„LOAD“				„SAVE“			
Letter of the alphabet	L	O	A	D	S	A	V	E
ASCII code decimal	076	079	065	068	083	065	086	069
ASCII hexadecimal	4C	4F	41	44	53	41	56	45
Input in register no.	**0x113C**		**0x113D**		**0x113E**		**0x113F**	
Hexadecimal	4C4F		4144		5341		5645	
Decimal	19535		16708		21313		22085	

Input in both register in the **Intel** format follow this scheme:

	„DAOL“				„EVAS“			
Letter of the alphabet	D	A	O	L	E	V	A	S
ASCII code decimal	068	065	079	076	069	086	065	083
ASCII hexadecimal	44	41	4F	4C	45	56	41	53
Input in register no.	**0x113C**		**0x113D**		**0x113E**		**0x113F**	
Hexadecimal	4441		4F4C		4556		4153	
Decimal	17473		20300		17750		16723	

The status of the saved module parameters can be observed via the web server.

0x27FE (10238) Number of entries in the current module list

This displays the number of modules that were connected when the coupler was started.

0x27FF (10239) Number of entries in the reference list

This displays the number of modules that were entered into the reference list.

0x2800 – 0x287F (10240 - 10367) Reference list

Each module identifier is made up of 4 bytes (2 registers) (see the overview of module IDs in the annex). If a 1 is set in register 1132, the reference list must be identical to the current module list before the data exchange can begin.

0x2A00 – 0x2A7F (10752 - 10879) Current module list

Each module identifier is made up of 4 bytes (2 registers) (see the Overview of module IDs in the annex). The modules that were connected when the coupler was started are entered here. To simplify configuration, the current module list can be copied into the reference list.

0x2B00 – 0x2B7F (11008 - 11135) Module offsets of process data

For each module there are two registers reserved to indicate the offset between the start address within the packed process data and the address 0x0000: The first register indicates the bit-offset of the outputs, the second one indicates the bit-offset of the inputs. Thus, it is possible to use these information directly for the access to coils or Descrete Inputs. Converting the address syntax is necessary for a register-wise access (see table "Implemented modbus functions"). In case there are no outputs or inputs, the register entry is 0xFFFF.

Example: For an arrangement of coupler, UR20-4AI-RTD-DIAG, UR20-1CNT-100-1DO, UR20-16DO-P the six registers 0x2B00 to 0x2B05 deliver the values 0xFFFF 0x0000 | 0x8000 0x0040 | 0x8050 0xFFFF. Since the first module has not outputs and the last module has no inputs, the entry of the respective registers is 0xFFFF. The value 0x8050 indicates that the access to the first output of the UR20-16DO-P can be realised via address 0x8050, bit 0. The value 0x0040 indicates, that the first input of the UR20-1CNT-100-1DO is accessible via the address 0x0040, bit 0.

0x8000 – 0x87FF (32768 - 34815) Process data inputs

For each module a data length of 64 bytes (32 registers) is reserved.
Example: Module 3 starts at address 0x8040.

0x9000 – 0x97FF (36864 - 38911) Process data outputs

For each module a data length of 64 bytes (32 registers) is reserved.
Example: Module 3 starts at address 0x9040.

0xA000 – 0xA7FF (40960 - 43007) Diagnostics

For each module a diagnostics data length of 64 bytes (32 registers) is reserved.
Example: Module 3 starts at address 0xA040.
In case of a diagnostics message, the 47 bytes of the module diagnosis are entered here from the corresponding tables (see the table of diagnostic data in the corresponding module description in the module chapter).
If a 1 is set in register 0x1134, reading out the corresponding diagnosis results in a confirmation of the alarm.

0xB000 – 0xB7FF (45056 - 47103) Process alarms

For each module a process alarm data length of 64 bytes (32 registers) is reserved.
Example: Module 3 starts at address 0xB040.
In case of a process alarm, the 4 bytes of the module are entered here from the corresponding table (see the table of process alarms in the corresponding module description in the module chapter).

0xC000 –0xC7FF (49152 - 51199) Parameters (Firmware version 01.xx.xx)

For each module a parameter data length of 32 registers is reserved. The modules can be parameterised via the web server.

0xC000 –0xFFFF (49152 - 65535) Parameters (Firmware version 02.00.00 or higher)

For each module a parameter data length of 256 registers is reserved. Example: Module 3 starts with address 0xC200. The modules can be parameterised via the web server or via the Modbus master.
One register is assigned to each module parameter with a size of max. 16 bit. 32 bit parameters use two subsequent registers (consider Motorola format!). The sequence of parameters as well as the optional values are listed in the parameter tables of the individual module descriptions (s. Chapter 6).
Example: Parameter 8 of module 3 has the address 0xC207 (provided that there is no 32 bit parameter prior to it in the same module).
Examples for 32 bit parameters are "Period duration" of the pulse width modulation modules and „End value" of the counter modules.

5.5 EtherNet/IP fieldbus coupler

The UR20-FBC-EIP fieldbus coupler is an EtherNet/IP™ participant developed according to IEC 61158. The coupler is the head module for the u-remote system bus, to which up to 64 active u-remote modules can be connected. The EtherNet/IP coupler has two Ethernet ports, and the integrated switch supports a line network structure.

The coupler can be accessed with a system-independent web server application via the USB service interface or the Ethernet. Thus all information, such as diagnostics, status values and parameters, can be read and all connected modules can be simulated or forced.

The station's main power supply is integrated in the coupler. Power is supplied via two 4-pole connectors, separated into the input and output current paths.

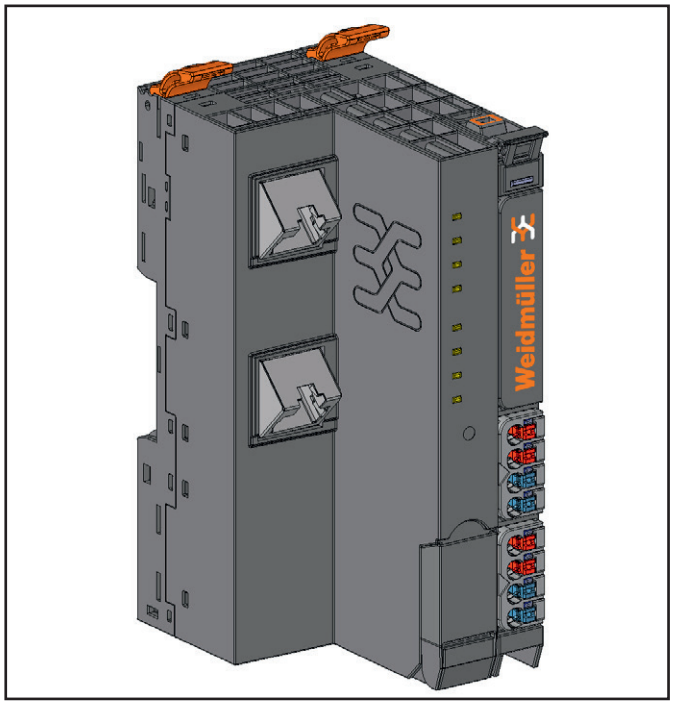

Fieldbus coupler UR20-FBC-EIP (Item No. 1334920000)

The first generation UR20-FBC-EIP fieldbus couplers come in hardware versions < HW 02.00.00 and ≥ HW 02.00.00.

Status indicators

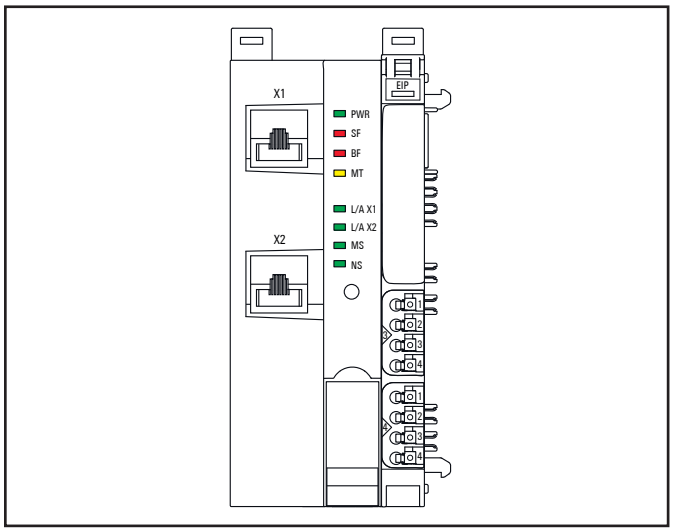

LED status indicators UR20-FBC-EIP ≥ HW 02.00.00, troubleshooting see Chapter 12

PWR	Power-LED	**Green**: Supply voltage connected
SF	Collective error	**Red:** Configuration error, or error in the coupler, or error in a module, or there is a new diagnostic message **Red flashing**: Station in Force mode
BF	Bus failure	**Red**: No fieldbus connection **Red flashing**: Configuration error, no PLC connection or parameter set error or firmware update is running
MT	Maintenance	**Yellow**: Error in the system bus or fieldbus error
L/A X1	Connection/ active	**Green/Yellow**[1)]: Connection established between port X1 of the coupler and another field device **Green flashing/Yellow flashing**[1)]: Data being exchanged on port X1
L/A X2	Connection/ active	**Green/Yellow**[1)]: Connection established between port X2 of the coupler and another field device **Green flashing/Yellow flashing**[1)]: Data being exchanged on port X2
MS	Module status	**Red**: More than one module does not fit the start-up configuration **Red flashing**: One module does not fit the start-up configuration or there is a diagnostic alarm on at least one module **Green**: Ready for operation **Green flashing**: Coupler not configured **Red/green flashing**: LED self test during start
NS	Network status	**Off:** No IP address assigned **Red**: IP address conflict **Red flashing**: Timeout of the exclusive owner connection **Green**: At least one EtherNet/IP connection is established **Green flashing**: No EtherNet/IP connection is established **Red/green flashing**: LED self test during start
1) Green: Transfer rate 100 MBit/s, Yellow: Transfer rate 10 MBit/s		

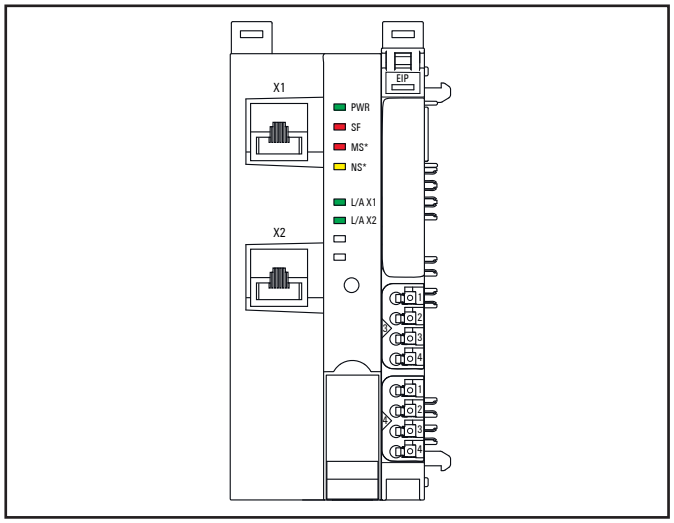

LED status indicators UR20-FBC-EIP < HW 02.00.00, troubleshooting see Chapter 12

PWR	Power-LED	**Green**: Supply voltage connected
SF	Collective error	**Red:** Configuration error, or error in the coupler, or error in a module, or there is a new diagnostic message **Red flashing**: Station in force mode
MS*	Module status	**Red**: More than one module does not fit the start-up configuration or no fieldbus connection **Red flashing**: One module does not fit the start-up configuration or there is a diagnostic alarm on at least one module
NS*	Network status	**Off**: At least one EtherNet/IP connection is established **Yellow**: Address conflict or no IP address configured **Yellow flashing (1 Hz)**: Valid IP address but no EtherNet/IP connection established **Yellow flashing (4 Hz)**: Connection timeout on an exclusive owner
L/A X1	Connection/ active	**Green/Yellow**[1)]: Connection established between port X1 of the coupler and another field device **Green flashing/Yellow flashing**[1)]: Data being exchanged on port X1
L/A X2	Connection/ active	**Green/Yellow**[1)]: Connection established between port X2 of the coupler and another field device **Green flashing/Yellow flashing**[1)]: Data being exchanged on port X2

1) Green: Transfer rate 100 MBit/s, Yellow: Transfer rate 10 MBit/s

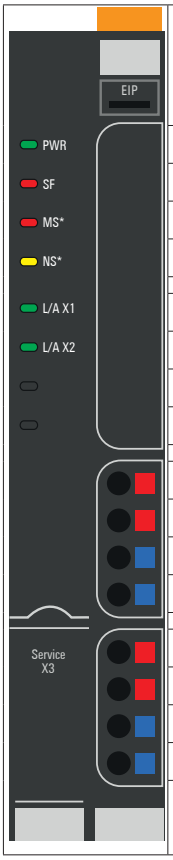

	Coupler power supply LED green: supply voltage >18 V red: at least one current path <18 V
3.1	Green: Input current path supply voltage > 18 V DC
3.2	Red: Input current path supply voltage < 18 V DC
3.4	Red: Internal fuse defective
4.1	Green: Output current path supply voltage > 18 V DC
4.2	Red: Output current path supply voltage < 18 V DC
4.4	Red: Internal fuse defective

LED indicators UR20-FBC-EIP, troubleshooting see Chapter 12

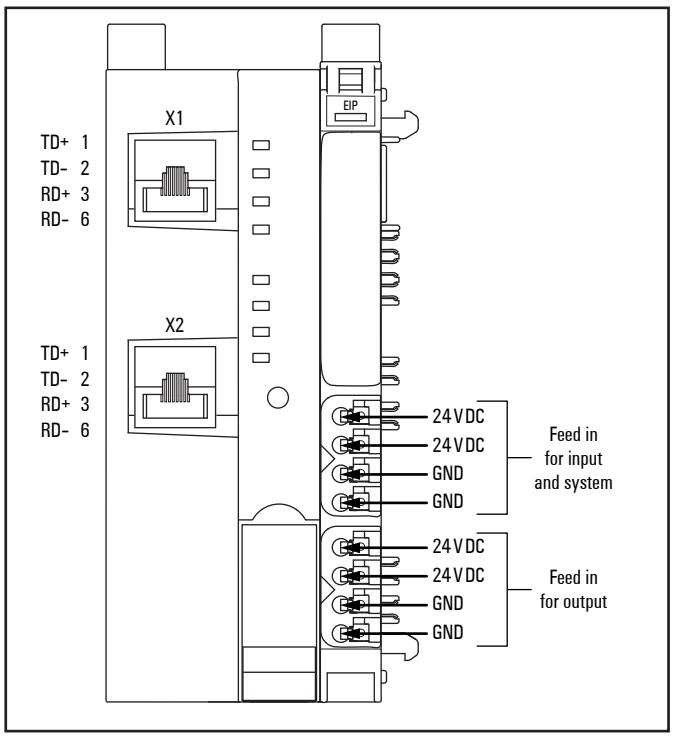

Connection diagram UR20-FBC-EIP

ATTENTION

Risk of material damage!

In the case of a maximum power supply of >8 A and a maximum temperature of >+55 °C, all four contacts must be connected with 1.5 mm² wiring!

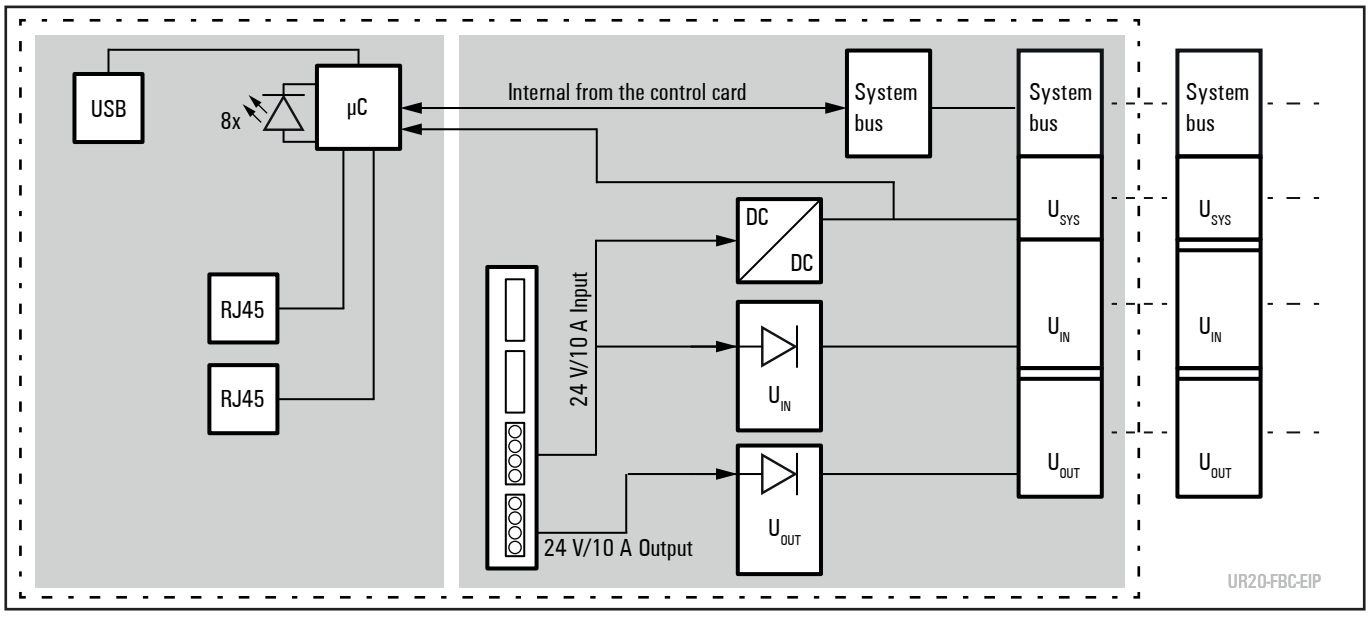

Block diagram UR20-FBC-EIP

Technical data UR20-FBC-EIP (Item No. 1334920000)

System data		
Connection	2 x RJ-45	
Fieldbus protocol	EtherNet/IP, see table "Supported Ethernet/IP services"	
Process data	max. 2 x 494 byte	
Parameter data	max. 64 x 64 byte	
Diagnostic data	max. 64 x 47 byte	
Configuation Assembly 122	max. 1350 byte	
Number of modules	max. 64 active	
Configuration interface	Micro USB 2.0	
Transfer rate	Fieldbus	10 Mbps / 100 Mbps
	u-remote system bus	max. 48 Mbps
Supply		
Supply voltage for system and inputs	24 V DC +20% / -15%	
Supply voltage for outputs	24 V DC +20% / -15%	
Feed-in current[1] for input modules	max. 10 A	
Feed-in current[1] for output modules	max. 10 A	
Current consumption from system current path I_{SYS}	112 mA	
Temperature data[1]		
< HW 02.00.00	Operation (horizontal installation)	-20 °C to +60 °C / -4 °F ... +140 °F (2 x 8 A power supply) -20 °C to +55 °C / -4 °F ... +131 °F (2 x 10 A power supply)
	Operation (vertical installation)	-20 °C to +55 °C / -4 °F ... +131 °F (2 x 6 A power supply) -20 °C to +50 °C / -4 °F ... +122 °F (2 x 8 A power supply)
≥ HW 02.00.00	Operation (horizontal installation)	-20 °C to +60 °C / -4 °F ... +140 °F (2 x 10 A power supply)
	Operation (vertical installation)	-20 °C to +55 °C / -4 °F ... +131 °F (2 x 8 A power supply)
	Storage, transport	-40 °C to +85 °C / -40 °F ... +185 °F
Connection data		
Type of connection	„PUSH IN"	
Conductor cross-section	Single-wired, fine-wired	0,14 ... 1,5 mm² (AWG 26 ... 16)
Weight		
Weight (operational status)	223 g	
General data, see Section 3.2		

1) Restrictions for the use in potentially explosive atmosphere: Only horizontal installation and max. 8 A power supply!

Supported EtherNet/IP-Services

Classes	0x01	0x02	0x04	0x06	0x52	0x64	0x65	0x66	0x67	0xF5	0xF6
Instance 0											
GetAll (0x01)	x	x		x						x	x
SetAll (0x02)											
Reset (0x05)											
MultipleServices (0x0A)											
Get (0x0E)	x	x	x	x	x	x	x	x	x	x	x
Set (0x10)											
FwdClose (0x4E)											
FwdOpen(0x54)											
GetOwner (0x5A)											
Large FwdOpen (0x5B)											
From instance 1 on											
GetAll (0x01)	x	x		x					x	x	x
SetAll (0x02)				x					x	x	
Reset (0x05)	x										
MultipleServices (0x0A)		x									
Get (0x0E)	x	x	x	x	x	x	x	x	x	x	x
Set (0x10)			x	x	x	x	x	x	x	x	x
FwdClose (0x4E)				x							
FwdOpen(0x54)				x							
GetOwner (0x5A)				x							
Large FwdOpen (0x5B)				x							

Overview of the editable parameters UR20-FBC-EIP

Parameter	Optional values	Default
Operating mode	Block device (Standard) / Modular device (CIP Bridging)	Block device
IP configuration	DHCP, BootP, Static	DHCP
IP address	4 numbers between 0-255	0.0.0.0
Subnet mask	4 numbers between 0-255	255.255.255.0
Gateway	4 numbers between 0-255	0.0.0.0
IP address USB port[1)]	192.168.1.202, 192.168.2.202, 192.168.3.202 ... 192.168.20.202	192.168.5.202
Webserver via Ethernet[1)]	disabled / enabled	enabled
HTTPS setting[2)]	HTTP & HTTPS concurrent operation / only HTTPS; no HTTP	HTTP & HTTPS concurrent operation
Output behaviour on IDLE state[3)]	All outputs off (0) / Enable substitute values (1) / Hold last value (2) / Continue data exchange (3)	All outputs off
Process alarm	disabled (0) / enabled (1)	disabled
Diagnostic alarm	disabled (0) / enabled (1)	disabled
Output behaviour on fieldbus error[3)]	All outputs off (0) / Enable substitute values (1) / Hold last value (2)	All outputs off
Module behaviour on hot swap	Continue data exchange (0) / Behaviour like fieldbus error (1)	Continue data exchange
Data format	Motorola (0) / Intel (1)	Intel
Lock force mode	Force mode unlocked / Force mode locked	Force mode unlocked

1) Change requires restart of the coupler.
2) From HW 02.00.00 upwards.
3) In operation mode **Block device,** there are two parameters for the output behaviour, in operation mode **Modular device**, they are collected in one parameter.

Assignment of IP addresses

The automatic assignment via **DHCP** is the default setting of the UR20-FBC-EIP. Further options are **BootP** or **Static**. For automatic assigning a respective server must be available in the network. The mode of IP assignment can be changed either via the web server or via the fieldbus.

Changing the mode of IP mapping via the fieldbus

Providing that the coupler has already received an address, the mode of IP assignment ca be changed via the following data object: TCP/IP object 0xF5 (245), instance 0x01 (1), attribute 0x03 (3). The options are **Static** [0], **BootP** [1] or DHCP [2].
When switching to mode **Static**, the coupler will keep the address that has been assigned automatically before; this address will be saved permanently.
When switching to an automatic mode the coupler will start a request on the respective server immediately.

Allocating a new IP address

A new IP address can be allocated via the following data object: TCP/IP object 0xF5 (245), instance 0x01 (1), attribute 0x05 (5). The new address will be saved permanently, if the mode **Static** is set. Using the automatic assignment the address will be used temporarily only.

Address Conflict Detection

After an address has been allocated to the coupler, it will be checked whether this address is already used within the network (**ACD**, Address Conflict Detection). In case an address conflict is detected and the address is rejected, the coupler requests another address from the DHCP server, as long as DHCP mode is active. When using mode BootP or Static, the coupler must be disconnected from the Ehternet and connected again.
The address check is executed every two minutes during operating. It can be turned off via the following data object: TCP/IP object 0xF5 (245), instance 0x01 (1), attribute 0x0A (10).

Data types UR20-FBC-EIP

Data type	Size	Value range
USINT	1 byte	0 ... 255
UINT	2 byte	0 ... 65535
UDINT	4 byte	0 ... (2^{32}-1)
BOOL	1 bit	
BYTE	8 bits	
WORD	16 bits	
DWORD	32 bits	
STRING	2 byte length indicator, 1 byte per character	
SHORT_STRING	1 byte length indicator, 1 byte per character	
STRING	Structure of Strings	
Padded EPATH		
Packed EPATH		

Configuration assembly

The CLP can be configured in such a way that the configuration assembly 0x7A (122) or 0x7B (123) will be transmitted during connection buildup. The length of assembly 0x7A is variable depending on the module configuration, assembly 0x7B has a fixed length of 400 Bytes. Two connections using the configuration assembly 0x7B are defined in the EDS file (from release 1.1 on).
Writing access to the data attribute of the configuration assembly is not possible during an established connection. To change the station's parameters during an established connection you can use attribute 0x73 of the gateway object or of the slot objects. Alternatively the u-remote station can be configured via the web server, as long as no fieldbus connection is active.
The configuration assembly includes an 8 byte bit mask (equivalent 64 bit) followed by the parameters of all modules. For each module containing parameters a „1" is set at the corresponding position of the bit mask. The sequence corresponds with the modules' sequence within the station, starting with byte 0, bit 0 for slot 1 (first module). After that the parameters of modules with a 3 byte header will follow: 1 byte length and 2 byte for the upper 16 bit of the module ID. The parameter data are not checked for validity in the coupler, but only in the module, if possible. If an error is detected, a diagnosis with "Parameter error" is sent.



When writing the parameter data, please make sure that they are valid. This will be achieved by setting the parameters in the web server and reading out the parameter data record.

Structure of the configuration assembly UR20-FBC-EIP

Byte	Bit 7	Bit 6	Bit 5	Bit 4	Bit 3	Bit 2	Bit 1	Bit 0
0	M 8	M 7	M 6	M 5	M 4	M 3	M 2	M 1
1	M 16	M 15	M 14	M 13	M 12	M 11	M 10	M 9
2	M 24	M 23	M 22	M 21	M 20	M 19	M 18	M 17
3	M 32	M 31	M 30	M 29	M 28	M 27	M 26	M 25
4	M 40	M 39	M 38	M 37	M 36	M 35	M 34	M 33
5	M 48	M 47	M 46	M 45	M 44	M 43	M 42	M 41
6	M 56	M 55	M 54	M 53	M 52	M 51	M 50	M 49
7	M 64	M 63	M 62	M 61	M 60	M 59	M 58	M 57
8	Parameter length of the first module that includes parameters							
9	Module ID							
10	Module ID							
11	Parameter							
...	...							
	Parameter length of the next module that includes parameters							
	Module ID							
	Module ID							
	Parameter							
...	...							

Parameterising via module parameter class 0x67

Each module parameter corresponds to one attribute starting from attribute 0x65. The number of attributes depends on the type of module. The ID of the last parameter attribute of a module can be read via attribute 0x64. The attribute data type (USINT, UINT or UDINT) depends on the parameter to be set. The parameter order as well as the possible values can be found in the parameter tables within each module description (see Chapter 6).

Class 0x67 supports the services “Get_Attributes_All“ and “Set_Attributes_All“, so that all parameters of a module can be written and read in one telegram. All attributes of a module are included in these telegrams beginning with attribute 0x65. Therefore the total length depends on the number of attributes and the particular data types. The parameter data are checked for validity in the coupler

Process data

The UR20-FBC-EIP process data are being packed into these assemblies:

Packed process data UR20-FBC-EIP

Input data	
Assembly 0x65 (101)	Assembly 0x67 (103)
2 byte status word	2 byte status word
X byte process data of the modules	X byte process data of the modules
	8 byte diagnostic data
Output data	
Assembly 0x66 (102)	Assembly 0x68 (104)
2 byte control word	2 byte control word
X byte process data of the modules	X byte process data of the modules
	8 byte diagnostic data control word

Assemblies 0x66 (102) and 0x68 (104) have a run/idle header.



Only the associated assemblies 101 with 102 or 103 with 104 can be used. If the EDS file has been installed this will be checked and an invalid access will be rejected.

Unpacked process data UR20-FBC-EIP

Input data	
Assembly 0x6F (111)	Assembly 0x71 (113)
2 byte status word	2 byte status word
X byte process data of the modules	X byte process data of the modules
	8 byte diagnostic data
Output data	
Assembly 0x70 (112)	Assembly 0x72 (114)
2 byte control word	2 byte control word
X byte process data of the modules	X byte process data of the modules
	8 byte diagnostic data control word

Assemblies 0x70 (112) and 0x72 (114) have a run/idle header.



Only the associated assemblies 111 with 112 or 113 with 114 can be used. If the EDS file has been installed this will be checked and an invalid access will be rejected.

Implicit and explicit messaging

The EtherNet/IP coupler supports cyclic process data exchange (implicit messaging) with an EtherNet/IP scanner. As of firmware 01.05.00 (with hardware version 01) and firmware 02.05.00 (with hardware version 02), furthermore the process data exchange can be activated via acyclic messages (explicit messaging).

An explicit access to read or write must take place within the time specified in the object 0x66/0x01/0x6B (102/1/107) „Timeout in seconds“, otherwise the connection will be terminated. In order for the coupler to accept write access, the object 0x66/0x01/0x6C (102/1/108) „Start Explicit Process Data Exchange“ must also be set to „1“. This object is automatically set to „0“ again when the connection is terminated. Thus, it must be ensured that this object is first set to „1“ again after each connection re-establishment, in order to enable explicit write access again.

The coupler supports simultaneous connection to several controllers. Only one controller has write access to the coupler, whereas all connected controllers have read access.

Connection options UR20-FBC-EIP

Connection type	Description	Multiple connections
Exclusive Owner	Cyclic process data exchange of assembly 101 (input) and assembly 102 (output)	Other controllers may only have read access
Exclusive Owner, Diagnosis Interface	Cyclic process data exchange of assembly 103 (input) and assembly 104 (output)	Other controllers may only have read access
Exclusive Owner with Config Assembly	Cyclic process data exchange of assembly 101 (input) and assembly 102 (output), transfer of the configuration assembly 123	Other controllers may only have read access
Exclusive Owner with Config Assembly	Cyclic process data exchange of assembly 103 (input) and assembly 104 (output), transfer of the configuration assembly 123	Other controllers may only have read access
Diagnosis Interface Input Only	Cyclic input data transfer from assembly 101 (outputs are assigned to assembly 198)	Further controllers may access, one of may write
Input Only, Diagnosis Interface	Cyclic input data transfer from assembly 103 (outputs are assigned to assembly 198)	Further controllers may access, one of may write
Listen Only	Cyclic input data transmission from Assembly 101 (Aoutputs are assigned to assembly 199)	At least one other controller must have read or write access
Listen Only, Diagnosis Interface	Zyklische Eingangsdatenübertragung von Assembly 103 (Ausgänge werden Assembly 199 zugewiesen)	At least one other controller must have read or write access
Explicit CIP Get Attribute	Acyclic reading data transmission	Further controllers may access, one of may write
Explicit CIP Set Attribute	Acyclic write data transmission, must be activated via object 102/1/108[1)]	Other controllers may only have read access

1) Only applies to connections that exclusively use explicit messaging. If acyclical set attribute accesses also take place from a control with an exclusive owner connection, activation is not necessary and the timeout is not relevant.

Packed process data of the modules

The process data of a digital module are packed directly on the process data of the previous module. The process data of all other modules always starts with the beginning of the next word.

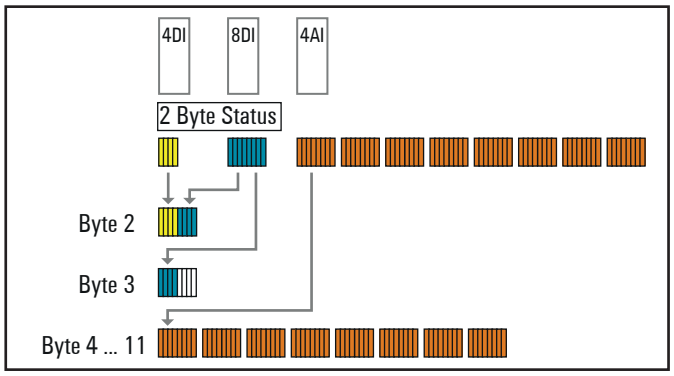

Packed process data in an exemplified module arrangement 4DI, 8DI, 4AI

The modules' process data include a maximum of 494 byte. Thererfore the process data of assembly 0x65 (101) and 0x66 (102) will include a maximum of 496 byte, whereas the process data of assembly 0x67 (103) and 0x68 (104) include a maximum of 504 byte. The actual length is defined by the arrangement of the modules, the assemblies' size is always an even number of bytes (2 byte, 4 byte etc.). So in the example assembly 0x65 (101) is 12 byte long whereas assembly 0x67 (103) is 20 byte long.

The size which is expected during the connection is being established can be read from class 0x04 (4), instances 0x65 to 0x68 (101 to 104), attribute 0x04 (4) or via the web server.

Unpacked process data of the modules

The process data of all modules is added byte by byte without gaps. A 4DI- or 4DO module therefore always occupies 1 Byte. There is no alignment on word limits.

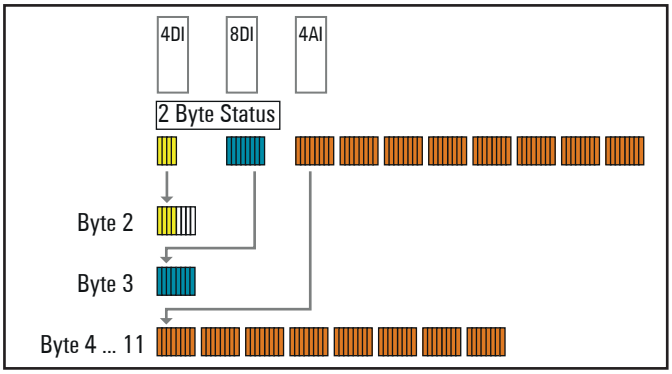

Unpacked process data in an exemplified module arrangement 4DI, 8DI, 4AI

The size which is expected during the connection is being established can be read from class 0x04 (4), instances 0x6F to 0x72 (111 to 114), attribute 0x04 (4) or via the web server.

Control word

8 Bytes of diagnostic data (assembly 0x67) or diagnostic data control word (assembly 0x68) are attached to the process data of both assemblies. Via the control word (2 byte at the beginning) and the diagnostic data control word (8 Byte at the end) of the process output data of assembly 0x68 you can choose which diagnostic data (8 byte at the end) shall be transferred within the process input data: 0 in the control word chooses diagnostic data, the 1 chooses process alarm data.
Via the diagnostic control word you choose the module the data of which shall be displayed: If there is a 0 in the diagnostic control word, the bits in the process input data indicate which modules have a diagnostic or a process alarm. Each bit set indicates an active alarm.
If a number from 1 to 64 is written in the diagnostic control word, the process alarm data (4 byte) or the first 8 byte of the diagnostic alarm dataset will be transferred within the process input data.

Control word UR20-FBC-EIP

Control word	Diagnostics control word	Diagnostic data
0	0	One bit of each module indicates whether it has a diagnosis
0	1 ... 64	Diagnostic data of the set module (the first 8 byte)
1	0	One bit of each module indicates whether it has a process alarm
1	1 ... 64	Process alarm data of the set module (4 byte are being used)

Status word UR20-FBC-EIP (packed process data input)

Bit	Name	Remarks
0	Summarized module diagnosis	A diagnosis is available for at least one module with diagnostics functionality.
1	Pending	More than one electronic unit or module has been removed from the station.
2	Errorbit 2	Reserve bit 2, currently not used
3	Systembus error	Error on the system bus. Communication with the connected modules is disrupted.
4	Unacknowledged diagnosis alarm	Unacknowledged diagnosis alarm
5	Unacknowledged process alarm	Unacknowledged process alarm
6	I/O-Configuration error	Deviation in the configuration. The module list has changed. The list of configured modules (Configured Module Ident List class 0x64 (100), instance 0x01 (1), attribute 0x70 (112)) differs from the module list detected by the coupler (Detected Module Ident List class 0x64 (100), instance 0x01 (1), attribute 0x6F (111)).
7	Master configuration error	Master configuration error. The list of configured modules (Configured Module Ident List class 0x64 (100), instance 0x01, attribute 0x70 (112)) differs significantly from the module list detected by the coupler (Detected Module Ident List class 0x64 (100), instance 0x01 (1), attribute 0x6F (111)) ab. No process data can be exchanged with the modules.
8	Errorbit 8	Reserve bit 8, currently not used
9	Errorbit 9	Reserve bit 9, currently not used
10	Force mode active	Force mode was activated through the web server. Process data cannot be exchanged between the master and forced channels.
11	Removed module	At least one module has been removed. This bit is reset when the station is complete again.
12	Errorbit 12	Reserve bit 12, currently not used
13	Voltage U_{OUT} error	Error in the voltage supply of output current path
14	Voltage U_{IN} error	Error in the voltage supply of system and input current path
15	IO-Link diagnosis	A diagnosis is present on an IO-Link device.

Object descriptions UR20-FBC-EIP: CIP Common Classes

Class	Attribute hex	Attribute dez	Get	Set	NV[1]	Data type[2]	Name	Description
Identity 0x01 (1)								
	Instance 0x00 (0)							
	0x01	1	x			UINT	Revision	Revision of this object
	0x02	2	x			UINT	Max Instance	Highest possible instance of this object
	0x03	3	x			UINT	Number of Instances	Current number of instances
	0x06	6	x			UINT	Max Class Attribute	ID of the last attribute of this class in instance 0
	0x07	7	x			UINT	Max Instance Attribute	ID of the last attribute of this class in the other instances
	Instance 0x01 (1)							
	0x01	1	x		x	UINT	Vendor ID	Vendor ID: 1015
	0x02	2	x		x	UINT	DeviceType	General type of device: 0x0C
	0x03	3	x		x	UINT	Product Code	Vendor assigned product code: 33492
	0x04	4	x		x	Struct{USINT,USINT}	Revision {Major, Minor}	Revision of the u-remote coupler
	0x05	5	x			WORD	Device Status	Bit0: Owned; Bit2= Configured; Bit4-7:Extended device status; Bit8: Minor recoverable fault; Bit9: Minor unrecoverable fault; Bit10: Major recoverable fault; Bit 11: Major unrecoverable fault; Bit12-15: Extended device status 2
	0x06	6	x		x	UDINT	Serial Number	Serial number of the device; 32 Bit value
	0x07	7	x		x	SHORT_STRING	Product Name	Product name: UR20-FBC-EIP
Message Router 0x02 (2)								
	Instance 0x00 (0)							
	0x01	1	x			UINT	Revision	Revision of this object
	0x02	2	x			UINT	Max Instance	Highest possible instance of this object
	0x03	3	x			UINT	Number of Instances	Current number of instances
	0x04	4	x			Struct{UINT,Array of UINT}	Optional Attributes	List of optional attributes
	0x05	5	x			Struct{UINT,Array of UINT}	Optional Services	List of optional services
	0x06	6	x			UINT	Max Class Attribute	ID of the last attribute of this class in instance 0
	0x07	7	x			UINT	Max Instance Attribute	ID of the last attribute of this class in the other instances
	Instance 0x01 (1)							
	0x01	1	x			Struct{UINT,Array of UINT}	List of supported objects	Number of objects; Class codes
	0x02	2	x			UINT	Number of supported connections	Number of supported connections
Assembly 0x04 (4)								
	Instance 0x00 (0)							
	0x01	1	x			UINT	Revision	Revision of this object
	0x02	2	x			UINT	Max Instance	Highest possible instance of this object
	0x03	3	x			UINT	Number of Instances	Current number of instances
	0x04	4	x			Struct{UINT,Array of UINT}	Optional Attributes	List of optional attributes implemented in this class

1) Non volatile (data are saved permanently)
2) For the description of data types refer to table Data types

Object descriptions UR20-FBC-EIP: CIP Common Classes

Class	Attribute hex	Attribute dez	Get	Set	NV[1]	Data type[2]	Name	Description
	0x06	6	x			UINT	Max Class Attribute	ID of the last attribute of this class in instance 0
	0x07	7	x			UINT	Max Instance Attribute	ID of the last attribute of this class in the other instances
	Instances 0x65 ... 0x68 (101 ... 104)							
	0x03	3	x	x		Array of BYTE	Data	Process data
	0x04	4	x			UINT	Size	Size of process data
	Instances 0x6F ... 0x72 (111 ... 114)							
	0x03	3	x			Array of BYTE	Data	Process data
	0x04	4	x	x		UINT	Size	Size of process data
	Instances 0x7A (122)							
	0x03	3	x			Array of BYTE	Data	Configuration data
	0x04	4	x	x		UINT	Size	Max. size of configuration data: 1350 Byte. The parameter data are not checked in the coupler, but only in the module, if possible.
	Instances 0x7B (123)							
	0x03	3	x	x		Array of BYTE	Data	Configuration data
	0x04	4	x			UINT	Size	Size of configuration data (static 400 BYTE). The parameter data are not checked in the coupler, but only in the module, if possible.
Connection Manager 0x06 (6)								
	Instance 0x00 (0)							
	0x01	1	x			UINT	Revision	Revision of this object
	0x02	2	x			UINT	Max Instance	Highest possible instance of this object
	0x03	3	x			UINT	Number of Instances	Current number of Instances
	0x04	4	x			Struct{UINT,Array of UINT}	Optional Attributes	List of optional attributes implemented in this class
	0x06	6	x			UINT	Max Class Attribute	ID of the last attribute of this class in instance 0
	0x07	7	x			UINT	Max Instance Attribute	ID of the last attribute of this class in the other instances
	Instance 0x01 (1)							
	0x01	1	x	x		UINT	Open Requests	Number of forward open requests
	0x02	2	x	x		UINT	Open Format Rejects	Number of forward open requests, rejected because of bad format
	0x03	3	x	x		UINT	Open Resource Rejects	Number of forward open requests, rejected because of too few resources
	0x04	4	x	x		UINT	Open Other Rejects	Number of forward open requests, rejected because of other reasons than format or ressouce
	0x05	5	x	x		UINT	Close Requests	Number of forward close requests
	0x06	6	x	x		UINT	Close Format Rejects	Number of forward close requests, rejected because of bad format
	0x07	7	x	x		UINT	Close Other Rejects	Number of forward close requests, rejected because of other reasons than format
	0x08	8	x	x		UINT	Connection Timeouts	Number of connection timeouts

1) Non volatile (data are saved permanently)
2) For the description of data types refer to table Data types

Object descriptions UR20-FBC-EIP: CIP Common Classes

Class	Attribute hex	Attribute dez	Get	Set	NV[1]	Data type[2]	Name	Description
SNMP 0x52 (82)								
	Instance 0x00 (0)							
	0x01	1	x			UINT	Revision	Revision of this object
	0x02	2	x			UINT	Max Instance	Highest possible instance of this object
	0x03	3	x			UINT	Number of Instances	Current number of Instances
	0x04	4	x			Struct{UINT,Array of UINT}	Optional Attributes	List of optional Attributes implemented in this class
	0x06	6	x			UINT	Max Class Attribute	ID of the last attribute of this class in instance 0
	0x07	7	x			UINT	Max Instance Attribute	ID of the last attribute of this class in the other instances
	Instance 0x01 (1)							
	0x01	1	x	(x)	x	USINT	SNMP enable	1 = enable, 0 = disable
	0x02	2	x		x	USINT	SNMP Version	1 = SNMPv1, 3 = SNMPv3, 31 = SNMPv1+v3
	0x03	3	x	(x)	x	Struct{USINT,STRING}	Trap 1	Destination of SNMP-traps, Byte1: 0 = unconfigured, 1 = IP address; String: IP address in form 123.123.123.123
	0x04	4	x	(x)	x	Struct{USINT,STRING}	Trap 2	Destination of SNMP-traps, Byte1: 0 = unconfigured, 1 = IP address; String: IP address in form 123.123.123.123
	0x05	5	x	(x)	x	BOOL	Trap enable	1 = enable, 0 = disable
	0x06	6	x		x	USINT	Trap Type	1 = TrapV1PDU, 2 = TrapV2PDU (only with SNMPv3)
TCP IP Interface 0xF5 (245)								
	Instance 0x00 (0)							
	0x01	1	x			UINT	Revision	Revision of this object
	0x02	2	x			UINT	Max Instance	Highest possible instance of this object
	0x03	3	x			UINT	Number of Instances	Current number of instances
	0x04	4	x			Struct{UINT,Array of UINT}	Optional Attributes	List of optional attributes implemented in this class
	0x06	6	x			UINT	Max Class Attribute	ID of the last attribute of this class in instance 0
	0x07	7	x			UINT	Max Instance Attribute	ID of the last attribute of this class in the other instances
TCP IP Interface 0xF5 (245)								
	Instance 0x01 (1)							
	0x01	1	x			DWORD	Interface Status	Status of the interface Bit 0 ... 3: 0 = not configured, 1 = configured by software, 2 = configured by hardware; Bit 4: Multicast pending; Bit 5: Interface configuration pending; Bit 6: ACD conflicted; Bit 7: ACD fault
	0x02	2	x		x	DWORD	Capability Flags	Bit 0: BootP; Bit 1: DNS; Bit 2: DHCP; Bit 4: Configuration settable; Bit 5: Configurable by hardware; Bit 6: Change requires reset; Bit 7: ACD capable

1) Non volatile (data are saved permanently)
2) For the description of data types refer to table Data types

Object descriptions UR20-FBC-EIP: CIP Common Classes

Class	Attribute hex	Attribute dez	Get	Set	NV[1]	Data type[2]	Name	Description
	0x03	3	x	x	x	DWORD	Control Flags	Bit 0 ... 3: 0 = static IP, 1 = BootP, 2 = DHCP;
	0x04	4	x		x	Struct{UINT,Padded EPATH}	Physical Link Object	Path to internal Ethernet interface
	0x05	5	x	x	x	Struct{5*UDINT,STRING}	Interface Configuration	IP, network mask, gateway; name server 1, name server 2; domain name
	0x06	6	x	x	x	STRING	Host Name	Host name, for informational purpose
	0x08	8	x	x	x	USINT	TTL Value	TTL value for multicast
	0x09	9	x	x	x	Struct{USINT,USINT,UINT,UDINT}	Mcast Config	Multicast configuration Byte 1: 0 = autogenerated, 1 = according to this parameter, 2 = reserved; Byte 2: reserved; Byte 3 - 4: number of multicast addresses; Byte 5 - 7: start address
	0xA	10	x	x	x	BOOL	ACD active	0 = ACD disabled, 1 = ACD enabled
	0xB	11	x	x	x	Struct{USINT,6*USINT,28*USINT}	Last ACD Conflict	Byte 1: Last conflict state, 0 = No conflict, 1 = during probe, 2 = during ongoing, 3 = during SemiActive; following 6 Bytes: MAC of the conflicting packet; following 28 Bytes: conflicting ARP packet
Ethernet Link 0xF6 (246)								
	Instance 0x00 (0)							
	0x01	1	x			UINT	Revision	Revision of this object
	0x02	2	x			UINT	Max Instance	Highest possible instance of this object
	0x03	3	x			UINT	Number of Instances	Current number of instances
	0x04	4	x			Struct{UINT,Array of UINT}	Optional Attributes	List of optional attributes implemented in this class
	0x06	6	x			UINT	Max Class Attribute	ID of the last attribute of this class in instance 0
	0x07	7	x			UINT	Max Instance Attribute	ID of the last attribute of this class in the other instances
Ethernet Link 0xF6 (246)								
	Instances 0x01 ... 0x03 (1 ... 3)							
	0x01	1	x			UDINT	Interface Speed	Transfer rate 0 = undefined; 10 = 10 MBps; 100 = 100 MBps
	0x02	2	x			DWORD	Interface Flags	Information on the status and configuration of the interface Bit 0: Link active; Bit 1: 0 = Half duplex, 1 = Full duplex; Bit 2 ... 4: 0 = Autonegotiation in progress, 1 = Autonegotiation and speed detection failed, 2 = Autonegotiation failed but speed detected, 3 = Autonegotiation successfull, 4 = Autonegotiation deactivated; Bit 5: Requires reset before change settings; Bit 6: Hardware fault
	0x03	3	x		x	6*USINT	MAC address	MAC Address
	0x04	4	x			Struct(11*UDINT)	Interface Counters	Counters of the Network Interface
	0x05	5	x			Struct(12*UDINT)	Media Counters	Media specific counters

1) Non volatile (data are saved permanently)
2) For the description of data types refer to table Data types

Object descriptions UR20-FBC-EIP: CIP Common Classes

Class	Attribute hex	Attribute dez	Get	Set	NV[1]	Data type[2]	Name	Description
	0x06	6	x	x	x	Struct{WORD,UINT}	Interface Control	Bit 0: 1 = Autonegotiation, 0 = no autonegotiation; Bit 1: 0 = Half Duplex, 1 = Full Duplex; Byte 3 ... 4: Speed: 10 = 10 MBps, 100 = 100 MBps
	0x07	7	x		x	USINT	Interface Type	0 = unknown, 1 = internal, 2 = Twisted Pair, 3 = optical
	0x08	8	x			USINT	Interface State	0 = unknown, 1 = enabled, 2 = disabled, 3 = testing
	0x09	9	x	x	x	USINT	Admin State	0 = reserved, 1 = enable, 2 = disable
	0xA	10	x		x	SHORT_STRING	Interface Label	Text string (Port1/Port2/internal)

1) Non volatile (data are saved permanently)
2) For the description of data types refer to table Data types

Object descriptions UR20-FBC-EIP: Vendor specific classes

Class	Attribute hex	Attribute dez	Get	Set	NV[1]	Data type[2]	Name	Description
Gateway 0x64 (100)								
	Instance 0x00 (0)							
	0x64	100	x			UINT	Revision	Revision number
	0x65	101	x			UINT	Max Instance	Maximum number of instances
	0x66	102	x			UINT	Number of Instances	Current number of instances
	0x67	103	x			UINT	Max Class Attribute	ID of the last attribute of this class in instance 0
	Instance 0x01 (1)							
	0x64	100	x		x	UINT	Max Attributes	ID of the last instance attribute
	0x65	101	x		x	STRING	Hardware Version	Hardware version of the coupler
	0x66	102	x		x	STRING	Software Version	Software version of the coupler
	0x67	103	x		x	STRING	Serial Number	Full serial number of the coupler
	0x68	104	x			WORD	Status Word	Status word as in assembly
	0x69	105	x	x		WORD	Control Word	Control word as in assembly
	0x6A	106	x	x	x	BYTE	Parameter Fieldbus error	Parameter “Output behaviour on fieldbus error”; All outputs off (0) / Enable substitute values (1) / Hold last value (2)
	0x6B	107	x	x	x	BOOL	Parameter Hot swap	Parameter “Module behaviour on hot swap”; Continue data exchange (0) / Behaviour like fieldbus error (1)
	0x6C	108	x			Array of Struct{USINT,BYTE,Array of 2 BYTE}	Diag Summary	Diag bytes of all modules with diag: Byte 1: Slot number; Byte 2: Slot state; Byte 3-4: First two bytes of diag
	0x6D	109	x	x	x	BOOL	Parameter Data format	Parameter “Data format”; Motorola (0) / Intel (1)
	0x6E	110	x	x		Array of 4 BYTE	Save/Restore Module Parameter	Write SAVE to save the module parameter; Write LOAD to load the defaults of the module parameter

1) Non volatile (data are saved permanently)
2) For the description of data types refer to table Data types

Object descriptions UR20-FBC-EIP: Vendor specific classes

Class	Attribute		Get	Set	NV[1]	Data type[2]	Name	Description
	hex	dez						
	0x6F	111	x			Array of 64 DWORD	Current Module List	List of currently plugged modules
	0x70	112	x	x	x	Array of 64 DWORD	Module Ref List	List of expected modules
	0x71	113	x	x	x	BOOL	Diagnostic Alarm	Parameter “Diagnosis alarm”; disabled (0) / enabled (1)
	0x72	114	x	x	x	BOOL	Process Alarm	Parameter “Process alarm”; disabled (0) / enabled (1)
	0x73	115	x	x		Array of BYTE	Module Parameter	Array containing all parameter of all modules (Bytes 0 ... 449)
	0x74	116	x	x	x	BOOL	Force Lock	Force mode: unlocked (0) / locked (1)
	0x75	117	x	x	x	BYTE	Behaviour on Idle	Parameter “Behaviour on idle state“; All outputs off (0) / Enable substitute values (1)/ Hold last value (2)
	0x76	118	x		x	Array of 8 BYTE	Unacknowledged Diagnosis	In the event of an unackklowledged diagnosis the Bit in for the respective module is set to 1 (Bit 0 for the first module of the station, Bit 63 for the 64th module).
	0x77	119	x	x	x	BOOL	HTTPS Settings	0=HTTP&HTTPS, 1=HTTPS only
	0x78	120	x	x		Array of BYTE	Acyclic Access	Acyclic access for IO-Link or CAN module
	0x79	121	x	x		Array of BYTE	ModuleParameter 2	Array containing all Parameter of all modules (Bytes 450 ... 899)
	0x7A	122	x	x		Array of BYTE	ModuleParameter 3	Array containing all Parameter of all modules (Bytes 900 ... 1349)
	0x7B	123	x	x	x	BOOL	Operation Mode	0 = Block device, 1 = Modular device
	0x7C	124	x	x		BOOL	Store Module List	When set to 1, stores the module ref list
	0x7D	125	x	x		BOOL	Copy Module List	When set to 1, copies the current module list as module ref list
Slot 0x65 (101)								
	Instance 0x00 (0)							
	0x64	100	x			UINT	Revision	Revision number
	0x65	101	x			UINT	Max Instance	Maximum number of instances
	0x66	102	x			UINT	Number of Instances	Current number of instances
	0x67	103	x			UINT	Max Class Attribute	ID of the last attribute of this class in instance 0
	Instances 0x01 ... 0x40 (1 ... 64)							
	0x64	100	x		x	USINT	Max Attributes	ID of the last instance attribute
	0x65	101	x			STRING	Name	Name of the module
	0x66	102	x			STRING	Product Code	Order number of the module
	0x67	103	x			STRING	Serial Number	Serial number of the module
	0x68	104	x			UDINT	Module ID	ID of the module
	0x69	105	x			STRING	Hardware Version	Hardware version of the module
	0x6A	106	x			STRING	Software Version	Software version of the module
	0x6B	107	x			STRING	MX Version	MX version of the module

1) Non volatile (data are saved permanently)
2) For the description of data types refer to table Data types

Object descriptions UR20-FBC-EIP: Vendor specific classes

Class	Attribute hex	Attribute dez	Get	Set	NV[1]	Data type[2]	Name	Description
	0x6C	108	x			BYTE	Slot State	State of the module: 0x01: ok; 0x80: slot empty; 0x81: wrong module; 0x82: diagnosis active
	0x6D	109	x			UINT	Input Bit Length	Length of input data in Bit
	0x6E	110	x			UINT	Output Bit Length	Length of output data in Bit
	0x6F	111	x			UINT	Parameter Byte Length	Length of parameter data in Byte
	0x70	112	x			UINT	Diag Byte Length	Length of diagnosis data in Byte
	0x71	113	x			Array of BYTE	Process Data In	Input data of the module
	0x72	114	x	x		Array of BYTE	Process Data Out	Output data of the module
	0x73	115	x	x		Array of BYTE	Parameter Data	Parameter data of the module. The parameter data are not checked for validity in the coupler, but only in the module, if possible.
	0x74	116	x			Array of BYTE	Diagnosis Data	Diagnosis data of the module
	0x75	117	x			Array of BYTE	Process Alarm Data	Process alarm data of the module
Process Data 0x66 (102)								
	Instance 0x00 (0)							
	0x64	100	x			UINT	Revision	Revision number
	0x65	101	x			UINT	Max Instance	Maximum number of instances
	0x66	102	x			UINT	Number of Instances	Current number of instances
	0x67	103	x			UINT	Max Class Attribute	ID of the last attribute of this class in instance 0
	Instance 0x01 (1)							
	0x64	100	x		x	USINT	Max Attributes	ID of the last instance attribute
	0x65	101	x			Array of BYTE	Process Data In	All input data without status word
	0x66	102	x			UINT	Length Process Data In	Length of input data
	0x67	103	x	x		Array of BYTE	Process Data Out	All output data without control word
	0x68	104	x			UINT	Length Process Data Out	Length of output data
	0x69	105	x			Array of 8 BYTE	Diag Status	Diagnosis messages as in assembly
	0x6A	106	x			Array of 8 BYTE	Diag Control	Diagnosis control as in assembly
	0x6B	107	x	x		Word	Timeout in seconds	Time interval in seconds in which an explicit message access must take place, otherwise the connection is disconnected
	0x6C	108	x	x		Bool	Start Explicit Process Data Exchange	1 = Explicit Messaging activated (is reset when the connection is lost) / 0 = Explicit Messaging write access to process data blocked, read access possible
	0x6D	109	x			WORD	Status Register	Status Register, only in Modular device mode
	0x6E	110	x			WORD	Control Register	Control Register, only in Modular device mode

1) Non volatile (data are saved permanently)
2) For the description of data types refer to table Data types

Object descriptions UR20-FBC-EIP: Vendor specific classes

Class	Attribute		Get	Set	NV[1]	Data type[2]	Name	Description
	hex	dez						
Module Parameter 0x67 (103)								
	Instance 0x00 (0)							
	0x64	100	x			UINT	Revision	Revision of this Object
	0x65	101	x			UINT	Max Instance	Maximum number of instances
	0x66	102	x			UINT	Number of Instances	Current number of instances
	0x67	103	x			UINT	Max Class Attribute	ID of the last attribute of this class in instance 0
	Instances 0x01 ... 0x40 (1 ... 64)							
	0x64	100	x		x	UINT	Max Attributes	ID of the last instance attribute
	0x65	101	x	x		Depending on parameter	Parameter	First Parameter of the module. The parameter data are checked in the coupler, and also in the module, if possible.

1) Non volatile (data are saved permanently)
2) For the description of data types refer to table Data types

Coupler-dependent data width of I/O modules UR20-FBC-EIP

Item No.	Module	Configuration	Parameters	Diagnostics	Process data	
					Input	Output
		Bytes	Bytes	Bytes	Bytes	Bytes
1334930000	UR20-FBC-EIP	–	8	–	2/10[1]	2/10[1]
1315170000	UR20-4DI-P	4	4	47	1	–
2009360000	UR20-4DI-P-3W	4	4	47	1	–
1315180000	UR20-8DI-P-2W	4	8	47	1	–
1394400000	UR20-8DI-P-3W	4	8	47	1	–
1315190000	UR20-8DI-P-3W-HD	4	8	47	1	–
1315200000	UR20-16DI-P	4	–	47	2	–
1315210000	UR20-16DI-P-PLC-INT	4	–	47	2	–
1460140000	UR20-2DI-P-TS	4	6	47	60	–
1460150000	UR20-4DI-P-TS	4	8	47	60	–
1315350000	UR20-4DI-N	4	4	47	1	–
1315370000	UR20-8DI-N-3W	4	8	47	1	–
1315390000	UR20-16DI-N	4	–	47	2	–
1315400000	UR20-16DI-N-PLC-INT	4	–	47	2	–
1550070000	UR20-4DI-2W-230V-AC	4	–	47	1	–
2457240000	UR20-8DI-ISO-2W	4	8	47	1	–
1315220000	UR20-4DO-P	4	1	47	–	1
1315230000	UR20-4DO-P-2A	4	1	47	–	1
1394420000	UR20-4DO-PN-2A	4	1	47	–	1
1315240000	UR20-8DO-P	4	1	47	–	1
1509830000	UR20-8DO-P-2W-HD	4	1	47	–	1
1315250000	UR20-16DO-P	4	–	47	–	2

Coupler-dependent data width of I/O modules UR20-FBC-EIP

Item No.	Module	Configuration	Parameters	Diagnostics	Process data	
					Input	Output
		Bytes	Bytes	Bytes	Bytes	Bytes
1315270000	UR20-16DO-P-PLC-INT	4	–	47	–	2
1315410000	UR20-4DO-N	4	1	47	–	1
1315420000	UR20-4DO-N-2A	4	1	47	–	1
1315430000	UR20-8DO-N	4	1	47	–	1
1315440000	UR20-16DO-N	4	–	47	–	2
1315450000	UR20-16DO-N-PLC-INT	4	–	47	–	2
2457250000	UR20-4DO-ISO-4A	4	1	47	–	1
2456530000	UR20-8DIO-P-3W-DIAG	4	8	47	1	1
1315540000	UR20-4RO-SSR-255	4	1	47	–	1
1315550000	UR20-4RO-CO-255	4	1	47	–	1
1315600000	UR20-2PWM-PN-0.5A	4	8	47	4	12
3036960000	UR20-2PWM-PN-0.5A-V2	4	8	47	4	12
1315610000	UR20-2PWM-PN-2A	4	8	47	4	12
3036950000	UR20-2PWM-PN-2A-V2	4	8	47	4	12
2697910000	UR20-2PWM-I-2.5A-2DI-P	4	72	47	8	6
2489830000	UR20-1SM-50W-6DI2DO-P	4	21	47	16	16
2705620000	UR20-2AI-UI-16	4	4	47	4	–
2566090000	UR20-2AI-UI-16-DIAG	4	6	47	4	–
1315620000	UR20-4AI-UI-16	4	6	47	8	–
1315690000	UR20-4AI-UI-16-DIAG	4	8	47	8	–
1993880000	UR20-4AI-UI-DIF-16-DIAG	4	8	47	8	–
2544660000	UR20-4AI-UI-DIF-32-DIAG	4	40	47	16	–
2566960000	UR20-4AI-UI-ISO-16-DIAG	4	23	47	8	–
1506920000	UR20-4AI-UI-16-HD	4	6	47	8	–
1506910000	UR20-4AI-UI-16-DIAG-HD	4	8	47	8	–
1394390000	UR20-4AI-UI-12	4	6	47	8	–
1529370000	UR20-8AI-I-16-DIAG	4	11	47	16	–
1315650000	UR20-8AI-I-16-HD	4	10	47	16	–
1315720000	UR20-8AI-I-16-DIAG-HD	4	12	47	16	–
1315670000	UR20-8AI-I-PLC-INT	4	10	47	16	–
1315700000	UR20-4AI-RTD-DIAG	4	28	47	8	–
2456540000	UR20-4AI-RTD-HP-DIAG	4	44	47	8	–
1315710000	UR20-4AI-TC-DIAG	4	28	47	8	–
2001670000	UR20-4AI-R-HS-16-DIAG	4	63	47	8	–
2828350000	UR20-4AI-I-HART-ISO-16	4	9	47	16	16
2555940000	UR20-8AI-RTD-DIAG-2W	4	10	47	16	–
3039320000	UR20-15AI-U-16-DIAG	4	24	47	9	1
1990070000	UR20-2AI-SG-24-DIAG	4	26	47	16	16
2007420000	UR20-3EM-230V-AC	4	27	47	16	16

Coupler-dependent data width of I/O modules UR20-FBC-EIP

Item No.	Module	Configuration	Parameters	Diagnostics	Process data	
					Input	Output
		Bytes	Bytes	Bytes	Bytes	Bytes
2920830000	UR20-3EM-400V-AC-CT1A	4	40	47	32	8
2920840000	UR20-3EM-400V-AC-CT5A	4	40	47	32	8
2920850000	UR20-3EM-400V-AC-RC	4	40	47	32	8
2920860000	UR20-3EM-400V-AC-333mV	4	40	47	32	8
2705630000	UR20-2AO-UI-16	4	6	47	–	4
2566100000	UR20-2AO-UI-16-DIAG	4	7	47	–	4
2566970000	UR20-2AO-UI-ISO-16-DIAG	4	14	47		4
1315680000	UR20-4AO-UI-16	4	12	47	–	8
2453880000	UR20-4AO-UI-16-M	4	12	47	–	8
1315730000	UR20-4AO-UI-16-DIAG	4	13	47	–	8
2453870000	UR20-4AO-UI-16-M-DIAG	4	13	47	–	8
1510690000	UR20-4AO-UI-16-HD	4	12	47	–	8
1506930000	UR20-4AO-UI-16-DIAG-HD	4	13	47	–	8
1315570000	UR20-1CNT-100-1DO	4	21	47	12	10
1315590000	UR20-2CNT-100	4	40	47	12	12
1315580000	UR20-1CNT-500	4	21	47	8	10
1508080000	UR20-2FCNT-100	4	2	47	20	12
1508090000	UR20-1SSI	4	8	47	6	0
1315750000	UR20-1COM-232-485-422	4	6	47	16	16
2826800000	UR20-1COM-232-485-422-V2	4	35	47	19	19
2007430000	UR20-1COM-SAI-PRO	4	0	47	0	0
3116480000	UR20-1COM-SAI-PRO-V2	4	0	47	0	0
2489840000	UR20-1COM-CANOPEN	4	37	47	3–128	3–128
3040800000	UR20-1COM-CAN	4	36	47	3–122	3–122
1315740000	UR20-4COM-IO-LINK	See manual for UR20-4COM-IO-LINK communication module				
2819690000	UR20-4COM-IO-LINK-V2	See manual for UR20-4COM-IO-LINK communication module				
1529780000	UR20-4DI-4DO-PN-FSOE	–	–	–	–	–
1529800000	UR20-8DI-PN-FSOE	–	–	–	–	–
1335060000	UR20-4DI-4DO-PN-FSPS	–	–	–	–	–
1335070000	UR20-8DI-PN-FSPS	–	–	–	–	–
1335030000	UR20-PF-O-1DI-SIL	4	–	47	4	–
1335040000	UR20-PF-O-2DI-DELAY-SIL	4	–	47	4	–
1335050000	UR20-PF-O-2DI-SIL	4	–	47	4	–
max. data (in Byte)		264	1350	3008	496/504[1)]	496/504[1)]

1) Depending on the process data assembly used (see page 89)

5.6 EtherNet/IP fieldbus coupler V2

The UR20-FBC-EIP-V2 fieldbus coupler is an EtherNet/IP™ participant developed according to IEC 61158. The coupler is the head module for the u-remote system bus, to which up to 64 active u-remote modules can be connected. The EtherNet/IP coupler has two Ethernet ports, and the integrated switch supports a line network structure.
When operating the UR20-FBC-EIP-V2 fieldbus coupler on a redundancy-capable controller, it can be used in a ring network or in a redundant network via Parallel Redundancy Protocol (PRP).
The coupler can be accessed with a system-independent web server application via the USB service interface or the Ethernet. Thus all information, such as diagnostics, status values and parameters, can be read and all connected modules can be simulated or forced.
The station's main power supply is integrated in the coupler. Power is supplied via two 4-pole connectors, separated into the input and output current paths.

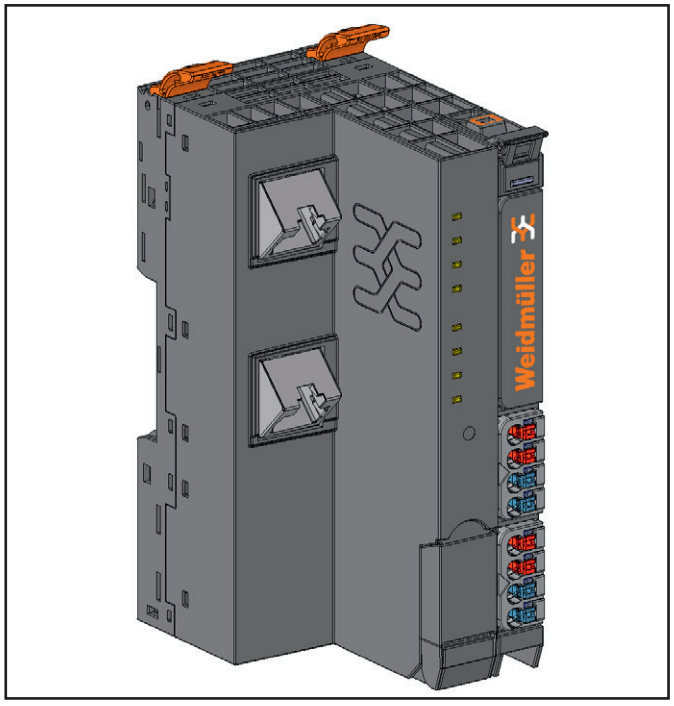

Fieldbus coupler UR20-FBC-EIP-V2 (Item No. 1550550000)

Status indicators

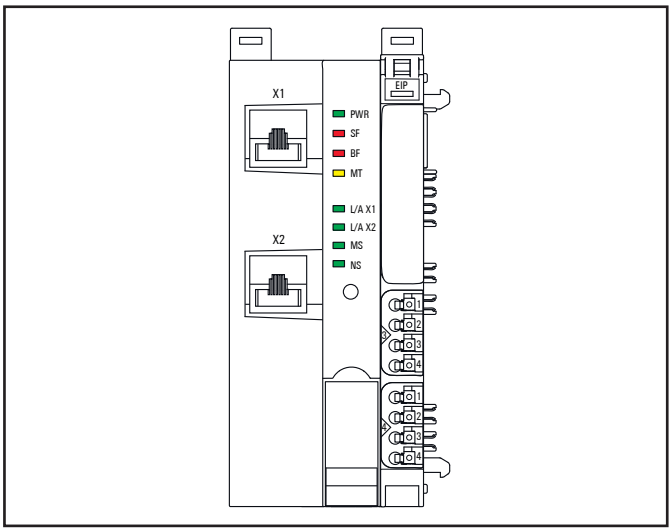

LED status indicators UR20-FBC-EIP-V2, troubleshooting see Chapter 12

PWR	Power-LED	**Green**: Supply voltage connected **Red:** Coupler not yet started completely or hardware error
SF	Collective error	**Red:** Configuration error, or error in the coupler, or error in a module, or there is a new diagnostic message **Red flashing**: Station in Force mode
BF	Bus failure	**Red**: No fieldbus connection **Red flashing**: Configuration error, no PLC connection or parameter set error or firmware update is running
MT	Maintenance	**Yellow**: Error in the system bus or fieldbus error
L/A X1	Connection/ active	**Green/Yellow**[1)]: Connection established between port X1 of the coupler and another field device **Green flashing/Yellow flashing**[1)]: Data being exchanged on port X1
L/A X2	Connection/ active	**Green/Yellow**[1)]: Connection established between port X2 of the coupler and another field device **Green flashing/Yellow flashing**[1)]: Data being exchanged on port X2
MS	Module status	**Red**: More than one module does not fit the start-up configuration **Red flashing**: One module does not fit the start-up configuration or there is a diagnostic alarm on at least one module **Green**: Ready for operation **Green flashing**: Coupler not configured **Red/green flashing**: LED self test during start
NS	Network status	**Off:** No IP address assigned **Red**: IP address conflict **Red flashing**: Timeout of the exclusive owner connection **Green**: At least one EtherNet/IP connection is established **Green flashing**: No EtherNet/IP connection is established **Red/green flashing**: LED self test during start
1) Green: Transfer rate 100 MBit/s, Yellow: Transfer rate 10 MBit/s		

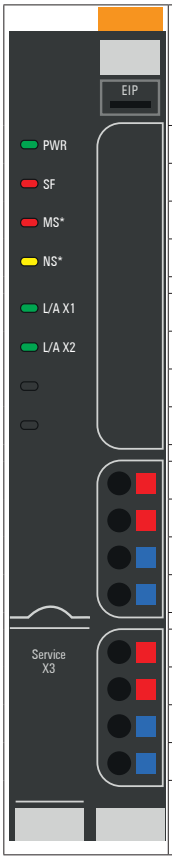

	Coupler power supply LED green: supply voltage >18 V red: at least one current path <18 V
3.1	Green: Input current path supply voltage > 18 V DC
3.2	Red: Input current path supply voltage < 18 V DC
3.4	Red: Internal fuse defective
4.1	Green: Output current path supply voltage > 18 V DC
4.2	Red: Output current path supply voltage < 18 V DC
4.4	Red: Internal fuse defective

LED indicators UR20-FBC-EIP-V2, troubleshooting see Chapter 12

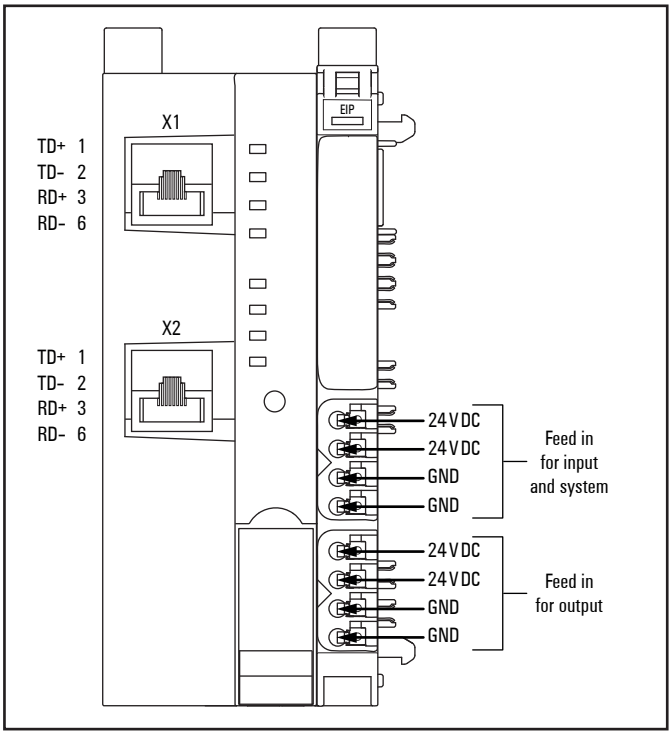

Connection diagram UR20-FBC-EIP-V2

ATTENTION

Risk of material damage!

In the case of a maximum power supply of >8 A and a maximum temperature of >+55 °C, all four contacts must be connected with 1.5 mm² wiring!

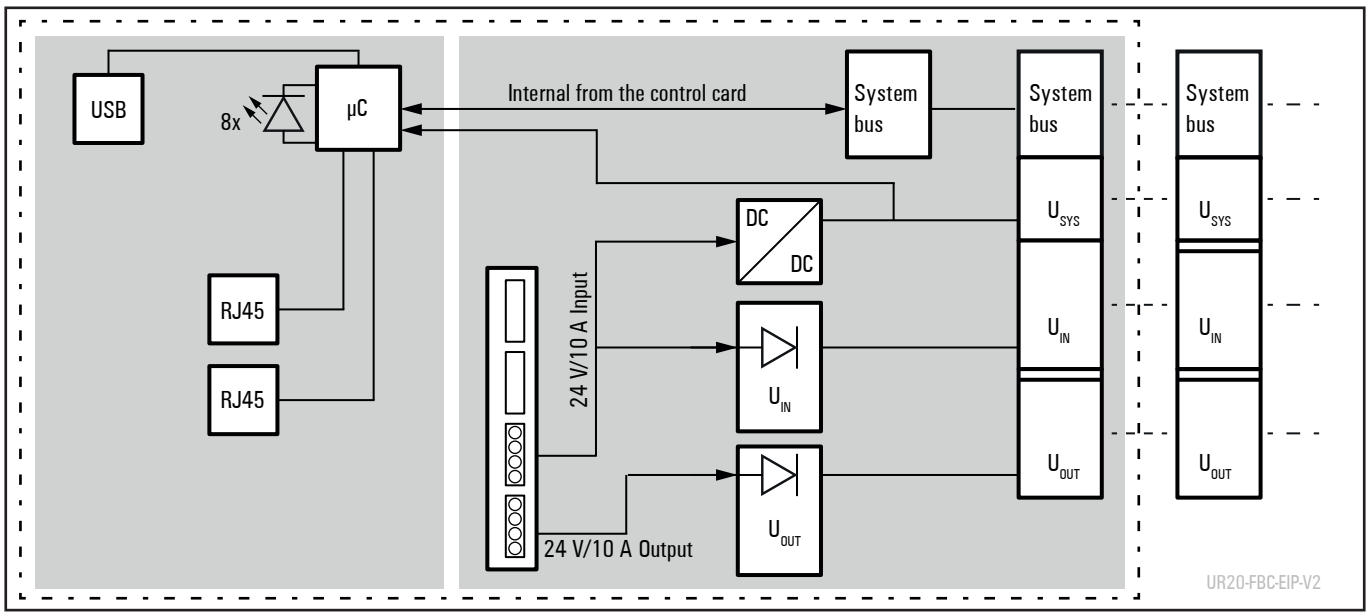

Block diagram UR20-FBC-EIP-V2

Technical data UR20-FBC-EIP-V2 (Item No. 1550550000)

System data		
Connection	2 x RJ-45	
Fieldbus protocol	EtherNet/IP, see table "Supported Ethernet/IP services"	
Redundancy protocols	DLR, PRP acc. to. IEC 62439-3, RSTP [1] acc. to. IEEE 802.1D	
VLAN	VLAN-Tagging gem. IEEE 802.1Q	
Process data	max. 2 x 494 byte	
Parameter data	max. 64 x 64 byte	
Diagnostic data	max. 64 x 47 byte	
Number of modules	max. 64 active	
Configuration interface	Micro USB 2.0	
Transfer rate	Fieldbus	10 Mbps / 100 Mbps
	u-remote system bus	max. 48 Mbps
Supply		
Supply voltage for system and inputs	24 V DC +20% / -15%	
Supply voltage for outputs	24 V DC +20% / -15%	
Feed-in current[2] for input modules	max. 10 A	
Feed-in current[2] for output modules	max. 10 A	
Current consumption from system current path I_{sys}	100 mA	
Temperature data[2]		
Operation (horizontal installation)	-20 °C to +60 °C / -4 °F ... +140 °F (2 x 10 A power supply)	
Operation (vertical installation)	-20 °C to +55 °C / -4 °F ... +131 °F (2 x 8 A power supply)	
Storage, transport	-40 °C to +85 °C / -40 °F ... +185 °F	
Connection data		
Type of connection	„PUSH IN"	
Conductor cross-section	Single-wired, fine-wired	0,14 ... 1,5 mm² (AWG 26 ... 16)
Weight		
Weight (operational status)	223 g	
General data, see Section 3.2		

1) supported from FW 01.01.00 and EDS-Datei 1.2 onwards
2) Restrictions for the use in potentially explosive atmosphere: Only horizontal installation and max. 8 A power supply!

Supported EtherNet/IP-Services

Classes	0x01	0x02	0x04	0x06	0x52	0x64	0x65	0x66	0x67	0xF5	0xF6
Instance 0											
GetAll (0x01)	x	x		x						x	x
SetAll (0x02)											
Reset (0x05)											
MultipleServices (0x0A)											
Get (0x0E)	x	x	x	x	x	x	x	x	x	x	x
Set (0x10)											
FwdClose (0x4E)											
FwdOpen(0x54)											
GetOwner (0x5A)											
Large FwdOpen (0x5B)											
From instance 1 on											
GetAll (0x01)	x	x		x					x	x	x
SetAll (0x02)				x					x	x	
Reset (0x05)	x										
MultipleServices (0x0A)		x									
Get (0x0E)	x	x	x	x	x	x	x	x	x	x	x
Set (0x10)			x	x	x	x	x	x	x	x	x
FwdClose (0x4E)				x							
FwdOpen(0x54)				x							
GetOwner (0x5A)				x							
Large FwdOpen (0x5B)				x							

Overview of the editable parameters UR20-FBC-EIP-V2

Parameter	Optional values	Default
Operating mode	Block device (Standard) / Modular device (CIP Bridging)	Block device
IP configuration	DHCP, BootP, Static	DHCP
IP address	4 numbers between 0-255	0.0.0.0
Subnet mask	4 numbers between 0-255	255.255.255.0
Gateway	4 numbers between 0-255	0.0.0.0
Redundancy protocol[2)]	none / DLR / PRP / RSTP	DLR
PRP Destination MAC	Numerical value in ms (0 ... 255)	0
PRP Entry Forget Time	Numerical value in ms (10 ... 10000)	400
PRP Node Reboot Interval	Numerical value in ms (110 ... 5000)	500
PRP Life Check Interval	Numerical value in ms (500 ... 60000)	2000
VLAN-Tags (802.1Q) verwenden	disabled (0) / enabled (1)	disabled
VLAN-ID	Value from 0 to 4095	0
VLAN behaviour	Also accept frames without VLAN tag or with wrong VLAN-ID (0) / Also accept frames with wrong VLAN-ID (1) / Only accept frames with matching VLAN-ID (2)	Also accept frames without VLAN tag or with wrong VLAN-ID
IP address USB port[1)]	192.168.1.202, 192.168.2.202, 192.168.3.202 ... 192.168.20.202	192.168.5.202
Webserver via Ethernet[1)]	enabled / disabled	enabled
HTTPS setting[3)]	HTTP & HTTPS concurrent operation / only HTTPS; no HTTP	only HTTPS; no HTTP
Process alarms	disabled (0) / enabled (1)	disabled
Diagnostic alarms	disabled (0) / enabled (1)	disabled
Output behaviour on fieldbus error	All outputs off (0) / Enable substitute values (1) / Hold last value (2)	All outputs off
Output behaviour in idle state	All outputs off (0) / Enable substitute values (1) / Hold last value (2) / Continue data exchange (3)	All outputs off
Module behaviour on hot swap	Continue data exchange (0) / Behaviour like fieldbus error (1)	Continue data exchange
Data format	Motorola (0) / Intel (1)	Intel
Lock force mode	Force mode unlocked / Force mode locked	Force mode unlocked

1) Change requires restart of the coupler. 2) See description below. 3) From HW 02.00.00 upwards.

Assignment of IP addresses

The automatic assignment via **DHCP** is the default setting of the UR20-FBC-EIP-V2. Further options are **BootP** or **Static**. For automatic assigning a respective server must be available in the network. The mode of IP assignment can be changed either via the web server or via the fieldbus.

Changing the mode of IP mapping via the fieldbus

Providing that the coupler has already received an address, the mode of IP assignment ca be changed via the following data object: TCP/IP object 0xF5 (245), instance 0x01 (1), attribute 0x03 (3). The options are **Static** [0], **BootP** [1] or DHCP [2].

When switching to mode **Static**, the coupler will keep the address that has been assigned automatically before; this address will be saved permanently.

When switching to an automatic mode the coupler will start a request on the respective server immediately.

Allocating a new IP address

A new IP address can be allocated via the following data object: TCP/IP object 0xF5 (245), instance 0x01 (1), attribute 0x05 (5). The new address will be saved permanently, if the mode **Static** is set. Using the automatic assignment the address will be used temporarily only.

Address Conflict Detection

After an address has been allocated to the coupler, it will be checked whether this address is already used within the network (**ACD**, Address Conflict Detection). In case an address conflict is detected and the address is rejected, the coupler requests another address from the DHCP server, as long as DHCP mode is active. When using mode BootP or Static, the coupler must be disconnected from the Ehternet and connected again.
The address check is executed every two minutes during operating. It can be turned off via the following data object: TCP/IP object 0xF5 (245), instance 0x01 (1), attribute 0x0A (10).

Data types UR20-FBC-EIP-V2

Data type	Size	Value range
USINT	1 byte	0 ... 255
UINT	2 byte	0 ... 65535
UDINT	4 byte	0 ... (2^{32}-1)
BOOL	1 bit	
BYTE	8 bits	
WORD	16 bits	
DWORD	32 bits	
STRING	2 byte length indicator, 1 byte per character	
SHORT_STRING	1 byte length indicator, 1 byte per character	
STRING	Structure of Strings	
Padded EPATH		
Packed EPATH		

Redundancy Protocol

Device Level Ring (DLR)

When using a redundancy-capable controller as supervisor, the UR20-FBC-EIP-V2 fieldbus coupler can be used in a ring network.

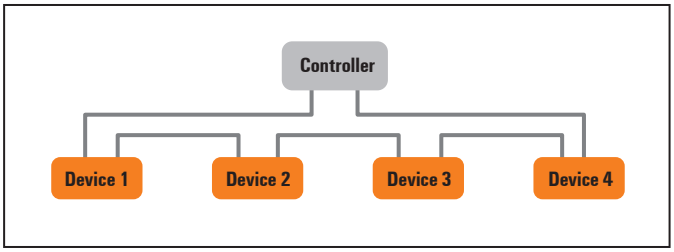

With the Device Level Ring protocol, network errors (e.g. a line break) are quickly detectable and the network communication is sent in two directions by the control until the error is corrected. In the event of an error, the ring is divided into two separate lines.

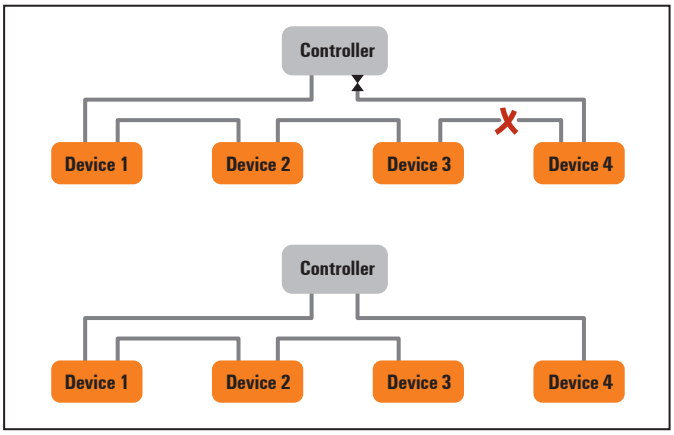

Parallel Redundancy Protocol (PRP)

For timesensitive applications, the UR20-FBC-EIP-V2 fieldbus coupler also supports the Parallel Redundancy Protocol (PRP), in which two identically designed networks are operated in parallel. In the event of an error, these networks can be switched seamlessly.

PRP Entry Forget Time

Maximum time an entry remains in the PRP duplicate table, regardless of the speed. If a duplicate is received after the Entry Forget time has elapsed, it will not be recognised as a duplicate but treated as an original frame.

PRP Life Check Interval

Time intervall between two subsequent PRP_Supervision Frames sent by the coupler.

PRP Node Reboot Interval

Minimum time the coupler remains mute after a reboot, regardless of the speed. The coupler reaches full functionality when the set time for the Node Reboot Interval has elapsed. The start-up of the coupler is therefore delayed.
The Node Reboot Interval is needed so that all PRP nodes in the network can delete the entries in their duplicate tables. Therefore, the set value should always be higher than the Entry Forget time. This applies to all PRP nodes in the network.

PRP Destination MAC Last Octet

The last octett of the multicast address used for PRP_Supervision frames. The default address for multicast is 01-15-4E-00-01-00. If conflicts occur with this address, the last octett can be exchanged between 0x00 and 0xFF.

RSTP

RSTP (Rapid Spanning Tree Protocol, IEEE 802.1w) iis a redundancy protocol for Ethernet networks at Layer 2. It allows communication to be quickly restored via an alternative network path in the event of a cable or device failure on one network path. In the event of a fault, switching to an alternative network path is performed automatically. A managed switch is used as a stable reference point and acts as the Root Bridge. The EtherNet/IP coupler contains an RSTP-capable switch, but it does not function as a Root Bridge.
The following parameters are available when RSTP is enabled.

RSTP-Bridge-Priority

Defines which switch acts as the Root Bridge. The lower the numeric value, the higher the priority. The switch with the lowest numeric value in the RSTP ring becomes the Root Bridge.
Default: 32768

RSTP-Hello-Time

The Hello Time is the time interval at which the Root Bridge regularly transmits Hello BPDUs (Bridge Protocol Data Units). The Hello Time should be configured according to the Root Bridge specifications to ensure communication failures are detected.
Default: 2 seconds

RSTP Forward-Delay

To prevent errors caused by ambiguous RSTP synchronisation, the EtherNet/IP coupler may switch to STP behavior as fallback level. The Forward Delay ensures that a port transitions to the Forwarding state only after a defined waiting period once the network topology has been calculated. During this time, all Ethernet frames (except BPDUs) are discarded.
Default: 15 seconds

RSTP Max-Age

The coupler considers BPDU information valid only for the duration of this time period. If no Hello BPDUs are received after this time has expired, the coupler interprets this as a connection failure.
Default: 20 seconds.

RSTP Transmit-Hold-Count

Maximum number of BPDUs that may be transmitted per second and per port.

RSTP Priorität Port X

For network paths of equal cost, the priority can be used to explicitly determine which port of the EtherNet/IP coupler remains active and which port is blocked. A lower value indicates higher priority, meaning that port is preferred as the network path to the Root Bridge.
Default: 128 for both Ethernet ports

RSTP Pfadkosten Port X

Network paths between EtherNet/IP devices and the Root Bridge may operate at different speeds. Slower paths are assigned higher overall path costs.
Default: 200000 for both Ethernet ports

Configuration assembly

The CLP can be configured in such a way that the configuration assembly 0x7A (122) or 0x7B (123) will be transmitted during connection buildup. The length of assembly 0x7A is variable depending on the module configuration, assembly 0x7B has a fixed length of 400 Bytes. Two connections using the configuration assembly 0x7B are defined in the EDS file (from release 1.1 on).

Writing access to the data attribute of the configuration assembly is not possible during an established connection. To change the station's parameters during an established connection you can use attribute 0x73 of the gateway object or of the slot objects. Alternatively the u-remote station can be configured via the web server, as long as no fieldbus connection is active.
The configuration assembly includes an 8 byte bit mask (equivalent 64 bit) followed by the parameters of all modules. For each module containing parameters a „1" is set at the corresponding position of the bit mask. The sequence corresponds with the modules' sequence within the station, starting with byte 0, bit 0 for slot 1 (first module). After that the parameters of modules with a 3 byte header will follow: 1 byte length and 2 byte for the upper 16 bit of the module ID. The parameter data are not checked for validity in the coupler, but only in the module, if possible. If an error is detected, a diagnosis with "Parameter error" is sent.

When writing the parameter data, please make sure that they are valid. This will be achieved by setting the parameters in the web server and reading out the parameter data record.

Structure of the configuration assembly UR20-FBC-EIP-V2

Byte	Bit 7	Bit 6	Bit 5	Bit 4	Bit 3	Bit 2	Bit 1	Bit 0
0	M 8	M 7	M 6	M 5	M 4	M 3	M 2	M 1
1	M 16	M 15	M 14	M 13	M 12	M 11	M 10	M 9
2	M 24	M 23	M 22	M 21	M 20	M 19	M 18	M 17
3	M 32	M 31	M 30	M 29	M 28	M 27	M 26	M 25
4	M 40	M 39	M 38	M 37	M 36	M 35	M 34	M 33
5	M 48	M 47	M 46	M 45	M 44	M 43	M 42	M 41
6	M 56	M 55	M 54	M 53	M 52	M 51	M 50	M 49
7	M 64	M 63	M 62	M 61	M 60	M 59	M 58	M 57
8	Parameter length of the first module that includes parameters							
9	Module ID							
10	Module ID							
11	Parameter							
...	...							
	Parameter length of the next module that includes parameters							
	Module ID							
	Module ID							
	Parameter							
...	...							

Parameterising via module parameter class 0x67

Each module parameter corresponds to one attribute starting from attribute 0x65. The number of attributes depends on the type of module. The ID of the last parameter attribute of a module can be read via attribute 0x64. The attribute data type (USINT, UINT or UDINT) depends on the parameter to be set. The parameter order as well as the possible values can be found in the parameter tables within each module description (see Chapter 6).
Class 0x67 supports the services "Get_Attributes_All" and "Set_Attributes_All", so that all parameters of a module can be written and read in one telegram. All attributes of a module are included in these telegrams beginning with attribute 0x65. Therefore the total length depends on the number of attributes and the particular data types. The parameter data are checked for validity in the coupler

Process data

The UR20-FBC-EIP-V2 process data are being packed into these assemblies:

Packed process data UR20-FBC-EIP-V2

Input data	
Assembly 0x65 (101)	Assembly 0x67 (103)
2 byte status word	2 byte status word
X byte process data of the modules	X byte process data of the modules
	8 byte diagnostic data
Output data	
Assembly 0x66 (102)	Assembly 0x68 (104)
2 byte control word	2 byte control word
X byte process data of the modules	X byte process data of the modules
	8 byte diagnostic data control word

Assemblies 0x66 (102) and 0x68 (104) have a run/idle header.

Only the associated assemblies 101 with 102 or 103 with 104 can be used. If the EDS file has been installed this will be checked and an invalid access will be rejected.

Unpacked process data UR20-FBC-EIP

Input data	
Assembly 0x6F (111)	Assembly 0x71 (113)
2 byte status word	2 byte status word
X byte process data of the modules	X byte process data of the modules
	8 byte diagnostic data
Output data	
Assembly 0x70 (112)	Assembly 0x72 (114)
2 byte control word	2 byte control word
X byte process data of the modules	X byte process data of the modules
	8 byte diagnostic data control word

Assemblies 0x70 (112) and 0x72 (114) have a run/idle header.

Only the associated assemblies 111 with 112 or 113 with 114 can be used. If the EDS file has been installed this will be checked and an invalid access will be rejected.

Implicit and explicit messaging

The EtherNet/IP coupler supports cyclic process data exchange (implicit messaging) with an EtherNet/IP scanner. Furthermore the process data exchange can be activated via acyclic messages (explicit messaging).
An explicit access to read or write must take place within the time specified in the object 0x66/0x01/0x6B (102/1/107) „Timeout in seconds“, otherwise the connection will be terminated. In order for the coupler to accept write access, the object 0x66/0x01/0x6C (102/1/108) „Start Explicit Process Data Exchange“ must also be set to „1“. This object is automatically set to „0“ again when the connection is terminated. Thus, it must be ensured that this object is first set to „1“ again after each connection re-establishment, in order to enable explicit write access again.

The coupler supports simultaneous connection to several controllers. Only one controller has write access to the coupler, whereas all connected controllers have read access.

Connection options UR20-FBC-EIP

Connection type	Description	Multiple connections
Exclusive Owner	Cyclic process data exchange of assembly 101 (input) and assembly 102 (output)	Other controllers may only have read access
Exclusive Owner, Diagnosis Interface	Cyclic process data exchange of assembly 103 (input) and assembly 104 (output)	Other controllers may only have read access
Exclusive Owner with Config Assembly	Cyclic process data exchange of assembly 101 (input) and assembly 102 (output), transfer of the configuration assembly 123	Other controllers may only have read access
Exclusive Owner with Config Assembly	Cyclic process data exchange of assembly 103 (input) and assembly 104 (output), transfer of the configuration assembly 123	Other controllers may only have read access
Diagnosis Interface Input Only	Cyclic input data transfer from assembly 101 (outputs are assigned to assembly 198)	Further controllers may access, one of may write
Input Only, Diagnosis Interface	Cyclic input data transfer from assembly 103 (outputs are assigned to assembly 198)	Further controllers may access, one of may write
Listen Only	Cyclic input data transmission from Assembly 101 (Aoutputs are assigned to assembly 199)	At least one other controller must have read or write access
Listen Only, Diagnosis Interface	Zyklische Eingangsdatenübertragung von Assembly 103 (Ausgänge werden Assembly 199 zugewiesen)	At least one other controller must have read or write access
Explicit CIP Get Attribute	Acyclic reading data transmission	Further controllers may access, one of may write
Explicit CIP Set Attribute	Acyclic write data transmission, must be activated via object 102/1/108[1)]	Other controllers may only have read access

1) Only applies to connections that exclusively use explicit messaging. If acyclical set attribute accesses also take place from a control with an exclusive owner connection, activation is not necessary and the timeout is not relevant.

Packed process data of the modules

The process data of a digital module are packed directly on the process data of the previous module. The process data of all other modules always starts with the beginning of the next word.

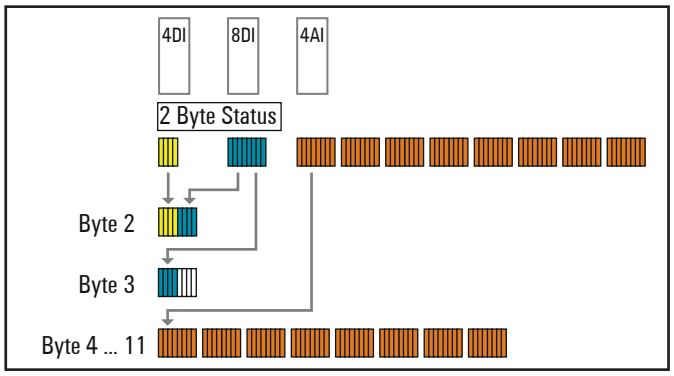

Packed process data in an exemplified module arrangement 4DI, 8DI, 4AI

The modules' process data include a maximum of 494 byte. Thererfore the process data of assembly 0x65 (101) and 0x66 (102) will include a maximum of 496 byte, whereas the process data of assembly 0x67 (103) and 0x68 (104) include a maximum of 504 byte. The actual length is defined by the arrangement of the modules, the assemblies' size is always an even number of bytes (2 byte, 4 byte etc.). So in the example assembly 0x65 (101) is 12 byte long whereas assembly 0x67 (103) is 20 byte long.

The size which is expected during the connection is being established can be read from class 0x04 (4), instances 0x65 to 0x68 (101 to 104), attribute 0x04 (4) or via the web server.

Unpacked process data of the modules

The process data of all modules is added byte by byte without gaps. A 4DI- or 4DO module therefore always occupies 1 Byte. There is no alignment on word limits.

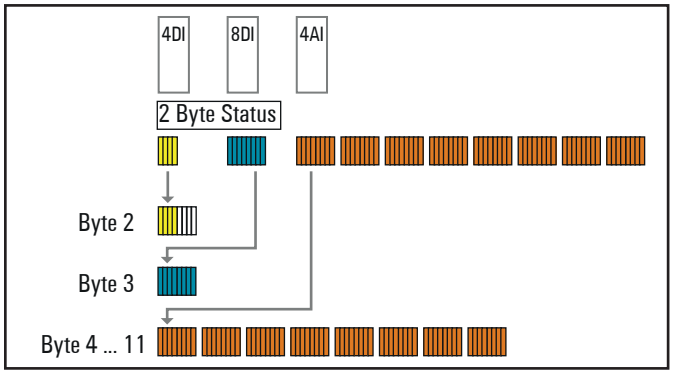

Unpacked process data in an exemplified module arrangement 4DI, 8DI, 4AI

The size which is expected during the connection is being established can be read from class 0x04 (4), instances 0x6F to 0x72 (111 to 114), attribute 0x04 (4) or via the web server.

Control word

8 Bytes of diagnostic data (assembly 0x67) or diagnostic data control word (assembly 0x68) are attached to the process data of both assemblies. Via the control word (2 byte at the beginning) and the diagnostic data control word (8 Byte at the end) of the process output data of assembly 0x68 you can choose which diagnostic data (8 byte at the end) shall be transferred within the process input data: 0 in the control word chooses diagnostic data, the 1 chooses process alarm data.
Via the diagnostic control word you choose the module the data of which shall be displayed: If there is a 0 in the diagnostic control word, the bits in the process input data indicate which modules have a diagnostic or a process alarm. Each bit set indicates an active alarm.
If a number from 1 to 64 is written in the diagnostic control word, the process alarm data (4 byte) or the first 8 byte of the diagnostic alarm dataset will be transferred within the process input data.

Control word UR20-FBC-EIP-V2

Control word	Diagnostics control word	Diagnostic data
0	0	One bit of each module indicates whether it has a diagnosis
0	1 ... 64	Diagnostic data of the set module (the first 8 byte)
1	0	One bit of each module indicates whether it has a process alarm
1	1 ... 64	Process alarm data of the set module (4 byte are being used)

Status word UR20-FBC-EIP-V2 (packed process data input)

Bit	Name	Remarks
0	Summarized module diagnosis	A diagnosis is available for at least one module with diagnostics functionality.
1	Pending	More than one electronic unit or module has been removed from the station.
2	Errorbit 2	Reserve bit 2, currently not used
3	Systembus error	Error on the system bus. Communication with the connected modules is disrupted.
4	Unacknowledged diagnosis alarm	Unacknowledged diagnosis alarm
5	Unacknowledged process alarm	Unacknowledged process alarm
6	I/O-Configuration error	Deviation in the configuration. The module list has changed. The list of configured modules (Configured Module Ident List class 0x64 (100), instance 0x01 (1), attribute 0x70 (112)) differs from the module list detected by the coupler (Detected Module Ident List class 0x64 (100), instance 0x01 (1), attribute 0x6F (111)).
7	Master configuration error	Master configuration error. The list of configured modules (Configured Module Ident List class 0x64 (100), instance 0x01, attribute 0x70 (112)) differs significantly from the module list detected by the coupler (Detected Module Ident List class 0x64 (100), instance 0x01 (1), attribute 0x6F (111)) ab. No process data can be exchanged with the modules.
8	Errorbit 8	Reserve bit 8, currently not used
9	Errorbit 9	Reserve bit 9, currently not used
10	Force mode active	Force mode was activated through the web server. Process data cannot be exchanged between the master and forced channels.
11	Removed module	At least one module has been removed. This bit is reset when the station is complete again.
12	Errorbit 12	Reserve bit 12, currently not used
13	Voltage U_{OUT} error	Error in the voltage supply of output current path
14	Voltage U_{IN} error	Error in the voltage supply of system and input current path
15	IO-Link diagnosis	A diagnosis is present on an IO-Link device.

Object descriptions UR20-FBC-EIP-V2: CIP Common Classes

Class	Attribute hex	Attribute dez	Get	Set	NV[1]	Data type[2]	Name	Description
Identity 0x01 (1)								
	Instance 0x00 (0)							
	0x01	1	x			UINT	Revision	Revision of this object
	0x02	2	x			UINT	Max Instance	Highest possible instance of this object
	0x03	3	x			UINT	Number of Instances	Current number of instances
	0x06	6	x			UINT	Max Class Attribute	ID of the last attribute of this class in instance 0
	0x07	7	x			UINT	Max Instance Attribute	ID of the last attribute of this class in the other instances
	Instance 0x01 (1)							
	0x01	1	x		x	UINT	Vendor ID	Vendor ID: 1015
	0x02	2	x		x	UINT	DeviceType	General type of device: 0x0C
	0x03	3	x		x	UINT	Product Code	Vendor assigned product code: 55055
	0x04	4	x		x	Struct{USINT,USINT}	Revision {Major, Minor}	Revision of the u-remote coupler
	0x05	5	x			WORD	Device Status	Bit0: Owned; Bit2= Configured; Bit4-7:Extended device status; Bit8: Minor recoverable fault; Bit9: Minor unrecoverable fault; Bit10: Major recoverable fault; Bit 11: Major unrecoverable fault; Bit12-15: Extended device status 2
	0x06	6	x		x	UDINT	Serial Number	Serial number of the device; 32 Bit value
	0x07	7	x		x	SHORT_STRING	Product Name	Product name: UR20-FBC-EIP-V2
Message Router 0x02 (2)								
	Instance 0x00 (0)							
	0x01	1	x			UINT	Revision	Revision of this object
	0x02	2	x			UINT	Max Instance	Highest possible instance of this object
	0x03	3	x			UINT	Number of Instances	Current number of instances
	0x04	4	x			Struct{UINT,Array of UINT}	Optional Attributes	List of optional attributes
	0x05	5	x			Struct{UINT,Array of UINT}	Optional Services	List of optional services
	0x06	6	x			UINT	Max Class Attribute	ID of the last attribute of this class in instance 0
	0x07	7	x			UINT	Max Instance Attribute	ID of the last attribute of this class in the other instances
	Instance 0x01 (1)							
	0x01	1	x			Struct{UINT,Array of UINT}	List of supported objects	Number of objects; Class codes
	0x02	2	x			UINT	Number of supported connections	Number of supported connections
Assembly 0x04 (4)								
	Instance 0x00 (0)							
	0x01	1	x			UINT	Revision	Revision of this object
	0x02	2	x			UINT	Max Instance	Highest possible instance of this object
	0x03	3	x			UINT	Number of Instances	Current number of instances

1) Non volatile (data are saved permanently)
2) For the description of data types refer to table Data types

Object descriptions UR20-FBC-EIP-V2: CIP Common Classes

Class	Attribute hex	Attribute dez	Get	Set	NV[1]	Data type[2]	Name	Description
	0x04	4	x			Struct{UINT,Array of UINT}	Optional Attributes	List of optional attributes implemented in this class
	0x06	6	x			UINT	Max Class Attribute	ID of the last attribute of this class in instance 0
	0x07	7	x			UINT	Max Instance Attribute	ID of the last attribute of this class in the other instances
	Instances 0x65 ... 0x68 (101 ... 104)							
	0x03	3	x	x		Array of BYTE	Data	Process data
	0x04	4	x			UINT	Size	Size of process data
	Instances 0x7A (122)							
	0x03	3	x			Array of BYTE	Data	Configuration data
	0x04	4	x	x		UINT	Size	Size of configuration data. The parameter data are not checked in the coupler, but only in the module, if possible.
	Instances 0x7B (123)							
	0x03	3	x	x		Array of BYTE	Data	Configuration data
	0x04	4	x			UINT	Size	Size of configuration data (static 400 BYTE). The parameter data are not checked in the coupler, but only in the module, if possible.
Connection Manager 0x06 (6)								
	Instance 0x00 (0)							
	0x01	1	x			UINT	Revision	Revision of this object
	0x02	2	x			UINT	Max Instance	Highest possible instance of this object
	0x03	3	x			UINT	Number of Instances	Current number of Instances
	0x04	4	x			Struct{UINT,Array of UINT}	Optional Attributes	List of optional attributes implemented in this class
	0x06	6	x			UINT	Max Class Attribute	ID of the last attribute of this class in instance 0
	0x07	7	x			UINT	Max Instance Attribute	ID of the last attribute of this class in the other instances
	Instance 0x01 (1)							
	0x01	1	x	x		UINT	Open Requests	Number of forward open requests
	0x02	2	x	x		UINT	Open Format Rejects	Number of forward open requests, rejected because of bad format
	0x03	3	x	x		UINT	Open Resource Rejects	Number of forward open requests, rejected because of too few resources
	0x04	4	x	x		UINT	Open Other Rejects	Number of forward open requests, rejected because of other reasons than format or ressouce
	0x05	5	x	x		UINT	Close Requests	Number of forward close requests
	0x06	6	x	x		UINT	Close Format Rejects	Number of forward close requests, rejected because of bad format
	0x07	7	x	x		UINT	Close Other Rejects	Number of forward close requests, rejected because of other reasons than format
	0x08	8	x	x		UINT	Connection Timeouts	Number of connection timeouts

1) Non volatile (data are saved permanently)
2) For the description of data types refer to table Data types

Object descriptions UR20-FBC-EIP-V2: CIP Common Classes

Class	Attribute hex	Attribute dez	Get	Set	NV[1]	Data type[2]	Name	Description
SNMP 0x52 (82)								
	Instance 0x00 (0)							
	0x01	1	x			UINT	Revision	Revision of this object
	0x02	2	x			UINT	Max Instance	Highest possible instance of this object
	0x03	3	x			UINT	Number of Instances	Current number of Instances
	0x04	4	x			Struct{UINT,Array of UINT}	Optional Attributes	List of optional Attributes implemented in this class
	0x06	6	x			UINT	Max Class Attribute	ID of the last attribute of this class in instance 0
	0x07	7	x			UINT	Max Instance Attribute	ID of the last attribute of this class in the other instances
	Instance 0x01 (1)							
	0x01	1	x	(x)	x	USINT	SNMP enable	1 = enable, 0 = disable
	0x02	2	x		x	USINT	SNMP Version	1 = SNMPv1, 3 = SNMPv3, 31 = SNMPv1+v3
	0x03	3	x	(x)	x	Struct{USINT,STRING}	Trap 1	Destination of SNMP-traps, Byte1: 0 = un-configured, 1 = IP address; String: the first 2 bytes indicate the length, followed by IP address in the form 123.123.123.123
	0x04	4	x	(x)	x	Struct{USINT,STRING}	Trap 2	Destination of SNMP-traps, Byte1: 0 = un-configured, 1 = IP address; String: the first 2 bytes indicate the length, followed by IP address in the form 123.123.123.123
	0x05	5	x	(x)	x	BOOL	Trap enable	1 = enable, 0 = disable
	0x06	6	x		x	USINT	Trap Type	1 = TrapV1PDU, 2 = TrapV2PDU (only with SNMPv3)
TCP IP Interface 0xF5 (245)								
	Instance 0x00 (0)							
	0x01	1	x			UINT	Revision	Revision of this object
	0x02	2	x			UINT	Max Instance	Highest possible instance of this object
	0x03	3	x			UINT	Number of Instances	Current number of instances
	0x04	4	x			Struct{UINT,Array of UINT}	Optional Attributes	List of optional attributes implemented in this class
	0x06	6	x			UINT	Max Class Attribute	ID of the last attribute of this class in instance 0
	0x07	7	x			UINT	Max Instance Attribute	ID of the last attribute of this class in the other instances

1) Non volatile (data are saved permanently)
2) For the description of data types refer to table Data types

Object descriptions UR20-FBC-EIP-V2: CIP Common Classes

Class	Attribute hex	Attribute dez	Get	Set	NV[1]	Data type[2]	Name	Description
TCP IP Interface 0xF5 (245)								
	Instance 0x01 (1)							
	0x01	1	x			DWORD	Interface Status	Status of the interface Bit 0 ... 3: 0 = not configured, 1 = configured by software, 2 = configured by hardware; Bit 4: Multicast pending; Bit 5: Interface configuration pending; Bit 6: ACD conflicted; Bit 7: ACD fault
	0x02	2	x		x	DWORD	Capability Flags	Bit 0: BootP; Bit 1: DNS; Bit 2: DHCP; Bit 4: Configuration settable; Bit 5: Configurable by hardware; Bit 6: Change requires reset; Bit 7: ACD capable
	0x03	3	x	x	x	DWORD	Control Flags	Bit 0 ... 3: 0 = static IP, 1 = BootP, 2 = DHCP;
	0x04	4	x		x	Struct{UINT,Padded EPATH}	Physical Link Object	Path to internal Ethernet interface
	0x05	5	x	x	x	Struct{5*UDINT,STRING}	Interface Configuration	IP, network mask, gateway; name server 1, name server 2; domain name
	0x06	6	x	x	x	STRING	Host Name	Host name, for informational purpose
	0x08	8	x	x	x	USINT	TTL Value	TTL value for multicast
	0x09	9	x	x	x	Struct{USINT,USINT,UINT,UDINT}	Mcast Config	Multicast configuration Byte 1: 0 = autogenerated, 1 = according to this parameter, 2 = reserved; Byte 2: reserved; Byte 3 - 4: number of multicast addresses; Byte 5 - 7: start address
	0xA	10	x	x	x	BOOL	ACD active	0 = ACD disabled, 1 = ACD enabled
	0xB	11	x	x	x	Struct{USINT,6*USINT,28*USINT}	Last ACD Conflict	Byte 1: Last conflict state, 0 = No conflict, 1 = during probe, 2 = during ongoing, 3 = during SemiActive; following 6 Bytes: MAC of the conflicting packet; following 28 Bytes: conflicting ARP packet
Ethernet Link 0xF6 (246)								
	Instance 0x00 (0)							
	0x01	1	x			UINT	Revision	Revision of this object
	0x02	2	x			UINT	Max Instance	Highest possible instance of this object
	0x03	3	x			UINT	Number of Instances	Current number of instances
	0x04	4	x			Struct{UINT,Array of UINT}	Optional Attributes	List of optional attributes implemented in this class
	0x06	6	x			UINT	Max Class Attribute	ID of the last attribute of this class in instance 0
	0x07	7	x			UINT	Max Instance Attribute	ID of the last attribute of this class in the other instances

1) Non volatile (data are saved permanently)
2) For the description of data types refer to table Data types

Object descriptions UR20-FBC-EIP-V2: CIP Common Classes

Class	Attribute hex	Attribute dez	Get	Set	NV[1]	Data type[2]	Name	Description
Ethernet Link 0xF6 (246)								
	Instances 0x01 ... 0x03 (1 ... 3)							
	0x01	1	x			UDINT	Interface Speed	Transfer rate 0 = undefined; 10 = 10 MBps; 100 = 100 MBps
	0x02	2	x			DWORD	Interface Flags	Information on the status and configuration of the interface Bit 0: Link active; Bit 1: 0 = Half duplex, 1 = Full duplex; Bit 2 ... 4: 0 = Autonegotiation in progress, 1 = Autonegotiation and speed detection failed, 2 = Autonegotiation failed but speed detected, 3 = Autonegotiation successfull, 4 = Autonegotiation deactivated; Bit 5: Requires reset before change settings; Bit 6: Hardware fault
	0x03	3	x		x	6*USINT	MAC address	MAC Address
	0x04	4	x			Struct(11*UDINT)	Interface Counters	Counters of the network interface
	0x05	5	x			Struct(12*UDINT)	Media Counters	Media specific counters
	0x06	6	x	x	x	Struct{WORD,UINT}	Interface Control	Bit 0: 1 = Autonegotiation, 0 = no autonegotiation; Bit 1: 0 = Half Duplex, 1 = Full Duplex; Byte 3 ... 4: Speed: 10 = 10 MBps, 100 = 100 MBps
	0x07	7	x		x	USINT	Interface Type	0 = unknown, 1 = internal, 2 = Twisted Pair, 3 = optical
	0x08	8	x			USINT	Interface State	0 = unknown, 1 = enabled, 2 = disabled, 3 = testing
	0x09	9	x	x	x	USINT	Admin State	0 = reserved, 1 = enable, 2 = disable
	0xA	10	x		x	SHORT_STRING	Interface Label	Text string (Port1/Port2/internal)
DLR 0x47 (71)								
	Instance 0x00 (0)							
	0x01	1	x			UINT	Revision	Revision number
	0x02	2	x			UINT	Max Instance	Maximum number of instances
	0x03	3	x			UINT	Number of Instances	Current number of instances
	0x06	6	x			UINT	Max Class Attribute	ID of the last class attribute
	0x07	7	x			UINT	Max Instance Attribute	ID of the last instance attribute
	Instance 0x01 (1)							
	0x01	1	x			USINT	Network Topology	Current network topology mode: 0 = Linear, 1 = Ring
	0x02	2	x			USINT	Network Status	Current status of network: 0 = Normal, 1 = Ring fault, 2 = Unexpected loop, 3 = Partial network fault, 4 = Rapid fault/Restore cycle
	0xA	10	x			Struct(UDINT,Array of 6 USINT)	Active Supervisor Address	IP address and MAC address of the active ring supervisor

1) Non volatile (data are saved permanently)
2) For the description of data types refer to table Data types

Object descriptions UR20-FBC-EIP-V2: CIP Common Classes

Class	Attribute hex	Attribute dez	Get	Set	NV[1]	Data type[2]	Name	Description
	0xC	12	x		x	DWORD	Capability Flags	Bit0: Announce-based Ring Node, Bit1: Beacon-based Ring Node, Bit5: Supervisor Capable, Bit6:Redundant Gateway Capable, Bit7:Flush_Table frame Capable
PRP 0x56 (86)								
	Instance 0x00 (0)							
	0x01	1	x			UINT	Revision	Revision Number
	0x02	2	x			UINT	Max Instance	Maximum Number of Instances
	0x03	3	x			UINT	Number of Instances	Current Number of Instances
	0x06	6	x			UINT	Max Class Attribute	ID of the last class attribute
	0x07	7	x			UINT	Max Instance Attribute	ID of the last instance attribute
	Instance 0x01 (1)							
	0x01	1	x		x	BOOL	LRE Enable	1=enable, 0=disable
	0x02	2	x		x	UINT	Node Type	Operating Mode: 0=PRP Mode 0, 1=PRP Mode 1, 2=HSR Mode
	0x03	3	x		x	SHORT_STRING	Node Name	Name of the LRE
	0x04	4	x		x	SHORT_STRING	Version Name	Version Name of the LRE
	0x05	5	x		x	ETH_MAC_ADDR	LRE MAC Address	MAC Address used by LRE
	0x06	6	x		x	UINT	Duplicate Discard	Enable Duplicate Discard Algorithm at reception, 1=Discard, 0=do not Discard
	0x07	7	x		x	UINT	Transparent Reception	0=Remove RCT, 1=Pass RCT
	0x08	8	x			Struct(9*UDINT)	LRE Interface Counters	
	0x09	9	x			Struct(6*UDINT)	LRD Duplicate Detection Counters	
	0xD	13	x		x	UINT	Switching Mode	3=PRP node
	0x10	16	x		x	BOOL	Evaluate Supervision	1=True, 0=False
RSTP Bridge 0x54 (84)								
	Instance 0x00 (0)							
	0x01	1	x			UINT	Revision	Revision Number
	0x02	2	x			UINT	Max Instance	Maximum Number of Instances
	0x03	3	x			UINT	Number of Instances	Current Number of Instances
	0x06	6	x			UINT	Max Class Attribute	ID of the last class attribute
	0x07	7	x			UINT	Max Instance Attribute	ID of the last instance attribute
	Instance 0x01 (1)							
	0x01	1	x		x	SHORT_STRING	Bridge Object Identification	Name of the Bridge Object
	0x02	2	x		x	UINT	Bridge Identifier Priority	
	0x03	3	x		x	UINT	Transmit Hold Count	
	0x04	4	x			UINT	Number of RSTP Ports	
	0x05	5	x			Array of UINT	List of RSTP Port Object References	Instance Numbers of the RSTP Ports
	0x06	6	x		x	UINT	Force Protocol Version	0=STP Compability mode, 2=Normal Operation

1) Non volatile (data are saved permanently)
2) For the description of data types refer to table Data types

Object descriptions UR20-FBC-EIP-V2: CIP Common Classes

Class	Attribute hex	Attribute dez	Get	Set	NV[1]	Data type[2]	Name	Description
	0x07	7	x		x	UINT	Bridge Max Age	Maximum age of transmitted information when Root Bridge in 1/256 seconds
	0x08	8	x		x	UINT	Bridge Hello Time	Interval between Configuration Messages in 1/256 seconds
	0x09	9	x		x	UINT	Bridge Forward Delay	Delay for transisiton to Forwardning in 1/256 seconds
	0xC	12	x			Array of USINT	Designated Root	Bridge Identifier of the root bridge: 2 Byte Bridge priority, 6 Byte MAC Address
	0xD	13	x			UDINT	Root Cost	Cost of path to root bridge
	0xE	14	x			UINT	Root Port	Port identifier of port with lowest cost to root bridge
RSTP Port 0x55 (85)								
	Instance 0x00 (0)							
	0x01	1	x			UINT	Revision	Revision Number
	0x02	2	x			UINT	Max Instance	Maximum Number of Instances
	0x03	3	x			UINT	Number of Instances	Current Number of Instances
	0x06	6	x			UINT	Max Class Attribute	ID of the last class attribute
	0x07	7	x			UINT	Max Instance Attribute	ID of the last instance attribute
	Instances 0x01 ... 0x02 (1 ... 2)							
	0x01	1	x			UINT	Bridge Object Instance	Instance Number of the RSTP Bridge Object
	0x02	2	x			UINT	Ethernet Link Instance Number	Instance Number of the Ethernet Link Object
	0x03	3	x			Array of 8 USINT	Reference Bridge Identifier	Bridge Identifier of this bridge: 2 Byte Bridge priority, 6 Byte MAC Address
	0x04	4	x		x	Array of 6 USINT	Port MAC Address	MAC Address of this port
	0x05	5	x		x	BOOL	RSTP Port Enable	0=RSTP Disabled, 1=RSTP Enabled
	0x06	6	x		x	UDINT	Port Identifier Priority	Set port priority
	0x07	7	x			BOOL	Open Edge Port	0=False, 1=True
	0x08	8	x			UINT	Port State	1=Disabled, 2=Blocking, 3=Listening, 4=Learning, 5=Forwarding, 6=Broken
	0x09	9	x			BOOL	mcheck	Transmit RST BPDUs for MigrateTime: 0=False, 1=True
	0xA	10	x			UDINT	Port Path Cost	Assigned cost of the port to root
	0xB	11	x			BOOL	Port Admin Edge Port	Edge Port: 0=False, 1=True
	0xC	12	x		x	UINT	Admin PointToPoint MAC	Admin status of the LAN segment of this port, 0=Forced True, 1=Forced False, 2=Auto
	0xD	13	x			UINT	Oper PointToPoint MAC	Status of the LAN segment of this port: 0=False, 1=True
	0xE	14	x			UINT	Port Role	0=Unknown, 1=Alternate/Backup, 2=Root, 3=Designated
	0xF	15	x			Array of 8 USINT	Designated Root Bridge Identifier	Bridge Identifier of the root bridge: 2 Byte Bridge priority, 6 Byte MAC Address
	0x10	16	x			UDINT	Designated Root Path Cost	Cost of path of designated port
	0x11	17	x			Array of 8 USINT	Designated Bridge Indentifier	Bridge Identifier of the Designated Bridge: 2 Byte Bridge priority, 6 Byte MAC Address
	0x12	18	x			UINT	Designated Port	Port Identifier of port on Designated Bridge

1) Non volatile (data are saved permanently)
2) For the description of data types refer to table Data types

Object descriptions UR20-FBC-EIP-V2: Vendor specific classes

Class	Attribute hex	Attribute dez	Get	Set	NV[1]	Data type[2]	Name	Description
Gateway 0x64 (100)								
	Instance 0x00 (0)							
	0x64	100	x			UINT	Revision	Revision number
	0x65	101	x			UINT	Max Instance	Maximum number of instances
	0x66	102	x			UINT	Number of Instances	Current number of instances
	0x67	103	x			UINT	Max Class Attribute	ID of the last attribute of this class in instance 0
	Instance 0x01 (1)							
	0x64	100	x		x	UINT	Max Attributes	ID of the last instance attribute
	0x65	101	x		x	STRING	Hardware Version	Hardware version of the coupler
	0x66	102	x		x	STRING	Software Version	Software version of the coupler
	0x67	103	x		x	STRING	Serial Number	Full serial number of the coupler
	0x68	104	x			WORD	Status Word	Status word as in assembly
	0x69	105	x	x		WORD	Control Word	Control word as in assembly
	0x6A	106	x	x	x	BYTE	Parameter Fieldbus error	Parameter “Output behaviour on fieldbus error”; All outputs off (0) / Enable substitute values (1) / Hold last value (2)
	0x6B	107	x	x	x	BOOL	Parameter Hot swap	Parameter “Module behaviour on hot swap”; Continue data exchange (0) / Behaviour like fieldbus error (1)
	0x6C	108	x			Array of Struct{USINT,BYTE,Array of 2 BYTE}	Diag Summary	Diag bytes of all modules with diag: Byte 1: Slot number; Byte 2: Slot state; Byte 3-4: First two bytes of diag
	0x6D	109	x	x	x	BOOL	Parameter Data format	Parameter “Data format”; Motorola (0) / Intel (1)
	0x6E	110	x	x		Array of 4 BYTE	Save/Restore Module Parameter	Write SAVE to save the module parameter; Write LOAD to load the defaults of the module parameter
	0x6F	111	x			Array of 64 DWORD	Current Module List	List of currently plugged modules
	0x70	112	x	x	x	Array of 64 DWORD	Module Ref List	List of expected modules
	0x71	113	x	x	x	BOOL	Diagnostic Alarm	Parameter “Diagnosis alarm”; disabled (0) / enabled (1)
	0x72	114	x	x	x	BOOL	Process Alarm	Parameter “Process alarm”; disabled (0) / enabled (1)
	0x73	115	x	x		Array of BYTE	Module Parameter	Array containing all parameter of all modules (Bytes 0 ... 449)
	0x74	116	x	x	x	BOOL	Force Lock	Force mode: unlocked (0) / locked (1)
	0x75	117	x	x	x	BYTE	Behaviour on Idle	Parameter “Behaviour on idle state“; All outputs off (0) / Enable substitute values (1)/ Hold last value (2)
	0x76	118	x		x	Array of 8 BYTE	Unacknowledged Diagnosis	In the event of an unackklowledged diagnosis the Bit in for the respective module is set to 1 (Bit 0 for the first module of the station, Bit 63 for the 64th module).
	0x77	119	x	x	x	BOOL	HTTPS Settings	0=HTTP&HTTPS, 1=HTTPS only

1) Non volatile (data are saved permanently)
2) For the description of data types refer to table Data types

Object descriptions UR20-FBC-EIP-V2: Vendor specific classes

Class	Attribute hex	Attribute dez	Get	Set	NV[1]	Data type[2]	Name	Description
	0x78	120	x	x		Array of BYTE	Acyclic Access	Acyclic access for IO-Link or CAN module
	0x79	121	x	x		Array of BYTE	ModuleParameter 2	Array containing all Parameter of all modules (Bytes 450-899)
	0x7A	122	x	x		Array of BYTE	ModuleParameter 3	Array containing all Parameter of all modules (Bytes 900-1349)
	0x7B	123	x	x	x	BOOL	Operation Mode	0=Block device, 1=Modular device
	0x7C	124	x	x		BOOL	Store Module List	When set to 1, stores the module ref list
	0x7D	125	x	x		BOOL	Copy Module List	When set to 1, copies the current module list as module ref list
	0x7E	126	x	x	x	USINT	Redundancy Protocol	Select redundancy protocol: 0=None, 1=DLR, 2=PRP, 3=RSTP
	0x7F	127	x	x		BYTE	PRP Destination MAC Last Octet	Last Octet of Multicast Addresss for PRP Supervision Frames
	0x80	128	x	x		UINT	PRP Entry Forget Time	Maximum time in PRP Duplicate table in ms (10-10000)
	0x81	129	x	x		UINT	PRP Node Reboot Interval	Time after reboot, where coupler remains mute in ms (110-5000)
	0x82	130	x	x		UINT	PRP Life Check Interval	Time between PRP Supervision Frames in ms (500-60000)
	0x83	131	x			WORD	CPU Temperature	Temperature of the CPU in 0,1°C
Slot 0x65 (101)								
	Instance 0x00 (0)							
	0x64	100	x			UINT	Revision	Revision number
	0x65	101	x			UINT	Max Instance	Maximum number of instances
	0x66	102	x			UINT	Number of Instances	Current number of instances
	0x67	103	x			UINT	Max Class Attribute	ID of the last attribute of this class in instance 0
	Instances 0x01 ... 0x40 (1 ... 64)							
	0x64	100	x		x	USINT	Max Attributes	ID of the last instance attribute
	0x65	101	x			STRING	Name	Name of the module
	0x66	102	x			STRING	Product Code	Order number of the module
	0x67	103	x			STRING	Serial Number	Serial number of the module
	0x68	104	x			UDINT	Module ID	ID of the module
	0x69	105	x			STRING	Hardware Version	Hardware version of the module
	0x6A	106	x			STRING	Software Version	Software version of the module
	0x6B	107	x			STRING	MX Version	MX version of the module
	0x6C	108	x			BYTE	Slot State	State of the module: 0x01: ok; 0x80: slot empty; 0x81: wrong module; 0x82: diagnosis active
	0x6D	109	x			UINT	Input Bit Length	Length of input data in Bit
	0x6E	110	x			UINT	Output Bit Length	Length of output data in Bit
	0x6F	111	x			UINT	Parameter Byte Length	Length of parameter data in Byte
	0x70	112	x			UINT	Diag Byte Length	Length of diagnosis data in Byte
	0x71	113	x			Array of BYTE	Process Data In	Input data of the module

1) Non volatile (data are saved permanently)
2) For the description of data types refer to table Data types

Object descriptions UR20-FBC-EIP-V2: Vendor specific classes

Class	Attribute		Get	Set	NV[1]	Data type[2]	Name	Description
	hex	dez						
	0x72	114	x	x		Array of BYTE	Process Data Out	Output data of the module
	0x73	115	x	x		Array of BYTE	Parameter Data	Parameter data of the module. The parameter data are not checked for validity in the coupler, but only in the module, if possible.
	0x74	116	x			Array of BYTE	Diagnosis Data	Diagnosis data of the module
	0x75	117	x			Array of BYTE	Process Alarm Data	Process alarm data of the module
Process Data 0x66 (102)								
	Instance 0x00 (0)							
	0x64	100	x			UINT	Revision	Revision number
	0x65	101	x			UINT	Max Instance	Maximum number of instances
	0x66	102	x			UINT	Number of Instances	Current number of instances
	0x67	103	x			UINT	Max Class Attribute	ID of the last attribute of this class in instance 0
	Instance 0x01 (1)							
	0x64	100	x		x	USINT	Max Attributes	ID of the last instance attribute
	0x65	101	x			Array of BYTE	Process Data In	All input data without status word
	0x66	102	x			UINT	Length Process Data In	Length of input data
	0x67	103	x	x		Array of BYTE	Process Data Out	All output data without control word
	0x68	104	x			UINT	Length Process Data Out	Length of output data
	0x69	105	x			Array of 8 BYTE	Diag Status	Diagnosis messages as in assembly
	0x6A	106	x			Array of 8 BYTE	Diag Control	Diagnosis control as in assembly
	0x6B	107	x	x		Word	Timeout in seconds	Time interval in seconds in which an explicit message access must take place, otherwise the connection is disconnected
	0x6C	108	x	x		Bool	Start Explicit Process Data Exchange	1 = Explicit Messaging activated (is reset when the connection is lost) / 0 = Explicit Messaging write access to process data blocked, read access possible
	0x6D	109	x			WORD	Status Register	Status Register, only in Modular device mode
	0x6E	110	x			WORD	Control Register	Control Register, only in Modular device mode
Module Parameter 0x67 (103)								
	Instance 0x00 (0)							
	0x64	100	x			UINT	Revision	Revision of this Object
	0x65	101	x			UINT	Max Instance	Maximum number of instances
	0x66	102	x			UINT	Number of Instances	Current number of instances
	0x67	103	x			UINT	Max Class Attribute	ID of the last attribute of this class in instance 0
	Instances 0x01 ... 0x40 (1 ... 64)							
	0x64	100	x		x	UINT	Max Attributes	ID of the last instance attribute
	0x65	101	x	x		Depending on parameter	Parameter	First Parameter of the module. The parameter data are checked in the coupler, and also in the module, if possible.

1) Non volatile (data are saved permanently)
2) For the description of data types refer to table Data types

Coupler-dependent data width of I/O modules UR20-FBC-EIP-V2

Item No.	Module	Configuration	Parameters	Diagnostics	Process data	
					Input	Output
		Bytes	Bytes	Bytes	Bytes	Bytes
1550550000	UR20-FBC-EIP-V2	–	8	–	2/10[1)]	2/10[1)]
1315170000	UR20-4DI-P	4	4	47	1	–
2009360000	UR20-4DI-P-3W	4	4	47	1	–
1315180000	UR20-8DI-P-2W	4	8	47	1	–
1394400000	UR20-8DI-P-3W	4	8	47	1	–
1315190000	UR20-8DI-P-3W-HD	4	8	47	1	–
1315200000	UR20-16DI-P	4	–	47	2	–
1315210000	UR20-16DI-P-PLC-INT	4	–	47	2	–
1460140000	UR20-2DI-P-TS	4	6	47	60	–
1460150000	UR20-4DI-P-TS	4	8	47	60	–
1315350000	UR20-4DI-N	4	4	47	1	–
1315370000	UR20-8DI-N-3W	4	8	47	1	–
1315390000	UR20-16DI-N	4	–	47	2	–
1315400000	UR20-16DI-N-PLC-INT	4	–	47	2	–
1550070000	UR20-4DI-2W-230V-AC	4	–	47	1	–
2457240000	UR20-8DI-ISO-2W	4	8	47	1	–
1315220000	UR20-4DO-P	4	1	47	–	1
1315230000	UR20-4DO-P-2A	4	1	47	–	1
1394420000	UR20-4DO-PN-2A	4	1	47	–	1
1315240000	UR20-8DO-P	4	1	47	–	1
1509830000	UR20-8DO-P-2W-HD	4	1	47	–	1
1315250000	UR20-16DO-P	4	–	47	–	2
1315270000	UR20-16DO-P-PLC-INT	4	–	47	–	2
1315410000	UR20-4DO-N	4	1	47	–	1
1315420000	UR20-4DO-N-2A	4	1	47	–	1
1315430000	UR20-8DO-N	4	1	47	–	1
1315440000	UR20-16DO-N	4	–	47	–	2
1315450000	UR20-16DO-N-PLC-INT	4	–	47	–	2
2457250000	UR20-4DO-ISO-4A	4	1	47	–	1
2456530000	UR20-8DIO-P-3W-DIAG	4	8	47	1	1
1315540000	UR20-4RO-SSR-255	4	1	47	–	1
1315550000	UR20-4RO-CO-255	4	1	47	–	1
1315600000	UR20-2PWM-PN-0.5A	4	8	47	4	12
3036960000	UR20-2PWM-PN-0.5A-V2	4	8	47	4	12
1315610000	UR20-2PWM-PN-2A	4	8	47	4	12
3036950000	UR20-2PWM-PN-2A-V2	4	8	47	4	12
2697910000	UR20-2PWM-I-2.5A-2DI-P	4	72	47	8	6
2489830000	UR20-1SM-50W-6DI2DO-P	4	21	47	16	16
2705620000	UR20-2AI-UI-16	4	4	47	4	–

Coupler-dependent data width of I/O modules UR20-FBC-EIP-V2

Item No.	Module	Configuration	Parameters	Diagnostics	Process data	
					Input	Output
		Bytes	Bytes	Bytes	Bytes	Bytes
2566090000	UR20-2AI-UI-16-DIAG	4	6	47	4	–
1315620000	UR20-4AI-UI-16	4	6	47	8	–
1315690000	UR20-4AI-UI-16-DIAG	4	8	47	8	–
1993880000	UR20-4AI-UI-DIF-16-DIAG	4	8	47	8	–
2544660000	UR20-4AI-UI-DIF-32-DIAG	4	40	47	16	–
2566960000	UR20-4AI-UI-ISO-16-DIAG	4	23	47	8	–
1506920000	UR20-4AI-UI-16-HD	4	6	47	8	–
1506910000	UR20-4AI-UI-16-DIAG-HD	4	8	47	8	–
1394390000	UR20-4AI-UI-12	4	6	47	8	–
1529370000	UR20-8AI-I-16-DIAG	4	11	47	16	–
1315650000	UR20-8AI-I-16-HD	4	10	47	16	–
1315720000	UR20-8AI-I-16-DIAG-HD	4	12	47	16	–
1315670000	UR20-8AI-I-PLC-INT	4	10	47	16	–
1315700000	UR20-4AI-RTD-DIAG	4	28	47	8	–
2456540000	UR20-4AI-RTD-HP-DIAG	4	44	47	8	–
1315710000	UR20-4AI-TC-DIAG	4	28	47	8	–
2001670000	UR20-4AI-R-HS-16-DIAG	4	63	47	8	–
2555940000	UR20-8AI-RTD-DIAG-2W	4	10	47	16	–
2828350000	UR20-4AI-I-HART-ISO-16	4	9	47	16	16
3039320000	UR20-15AI-U-16-DIAG	4	24	47	9	1
1990070000	UR20-2AI-SG-24-DIAG	4	26	47	16	16
2007420000	UR20-3EM-230V-AC	4	27	47	16	16
2920830000	UR20-3EM-400V-AC-CT1A	4	40	47	32	8
2920840000	UR20-3EM-400V-AC-CT5A	4	40	47	32	8
2920850000	UR20-3EM-400V-AC-RC	4	40	47	32	8
2920860000	UR20-3EM-400V-AC-333mV	4	40	47	32	8
2705630000	UR20-2AO-UI-16	4	6	47	–	4
2566100000	UR20-2AO-UI-16-DIAG	4	7	47	–	4
2566970000	UR20-2AO-UI-ISO-16-DIAG	4	14	47		4
1315680000	UR20-4AO-UI-16	4	12	47	–	8
2453880000	UR20-4AO-UI-16-M	4	12	47	–	8
1315730000	UR20-4AO-UI-16-DIAG	4	13	47	–	8
2453870000	UR20-4AO-UI-16-M-DIAG	4	13	47	–	8
1510690000	UR20-4AO-UI-16-HD	4	12	47	–	8
1506930000	UR20-4AO-UI-16-DIAG-HD	4	13	47	–	8
1315570000	UR20-1CNT-100-1DO	4	21	47	12	10
1315590000	UR20-2CNT-100	4	40	47	12	12
1315580000	UR20-1CNT-500	4	21	47	8	10
1508080000	UR20-2FCNT-100	4	2	47	20	12

Coupler-dependent data width of I/O modules UR20-FBC-EIP-V2

Item No.	Module	Configuration	Parameters	Diagnostics	Process data	
					Input	Output
		Bytes	Bytes	Bytes	Bytes	Bytes
1508090000	UR20-1SSI	4	8	47	6	0
1315750000	UR20-1COM-232-485-422	4	6	47	16	16
2826800000	UR20-1COM-232-485-422-V2	4	35	47	19	19
2007430000	UR20-1COM-SAI-PRO	4	0	47	0	0
3116480000	UR20-1COM-SAI-PRO-V2	4	0	47	0	0
2489840000	UR20-1COM-CANOPEN	4	37	47	3 – 128	3 – 128
3040800000	UR20-1COM-CAN	4	36	47	3 – 122	3 – 122
1315740000	UR20-4COM-IO-LINK	See manual for UR20-4COM-IO-LINK communication module				
2819690000	UR20-4COM-IO-LINK-V2	See manual for UR20-4COM-IO-LINK communication module				
1529780000	UR20-4DI-4DO-PN-FSOE	–	–	–	–	–
1529800000	UR20-8DI-PN-FSOE	–	–	–	–	–
1335060000	UR20-4DI-4DO-PN-FSPS	–	–	–	–	–
1335070000	UR20-8DI-PN-FSPS	–	–	–	–	–
1335030000	UR20-PF-O-1DI-SIL	4	–	47	4	–
1335040000	UR20-PF-O-2DI-DELAY-SIL	4	–	47	4	–
1335050000	UR20-PF-O-2DI-SIL	4	–	47	4	–
max. data (in Byte)		264	1350	3008	496/504[1)]	496/504[1)]

1) Depending on the process data assembly used (see page 111)

5.7 DeviceNet fieldbus coupler

The UR20-FBC-DN fieldbus coupler is the head module for the u-remote system bus, to which up to 64 active u-remote modules can be connected. The DeviceNet coupler is connected to the network with a 5-pole PCB plug-in connector.

The coupler can be accessed with a system-independent web server application via the USB service interface. Thus, all information, such as diagnostics, status values and parameters, can be read and all connected modules can be simulated or forced.

The station's main power supply is integrated in the coupler. Power is supplied via two 4-pole connectors, separated into the input and output current paths.

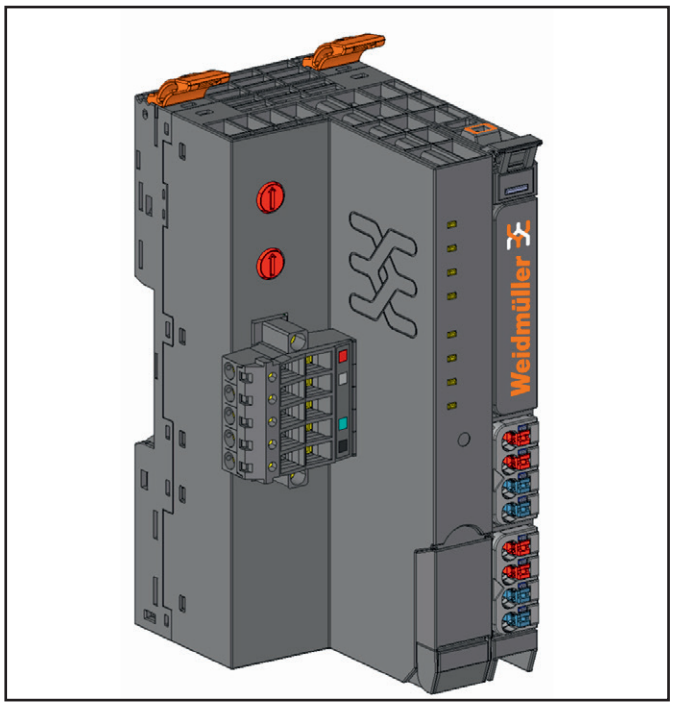

Fieldbus coupler UR20-FBC-DN (Item No. 1334900000)

Status indicators

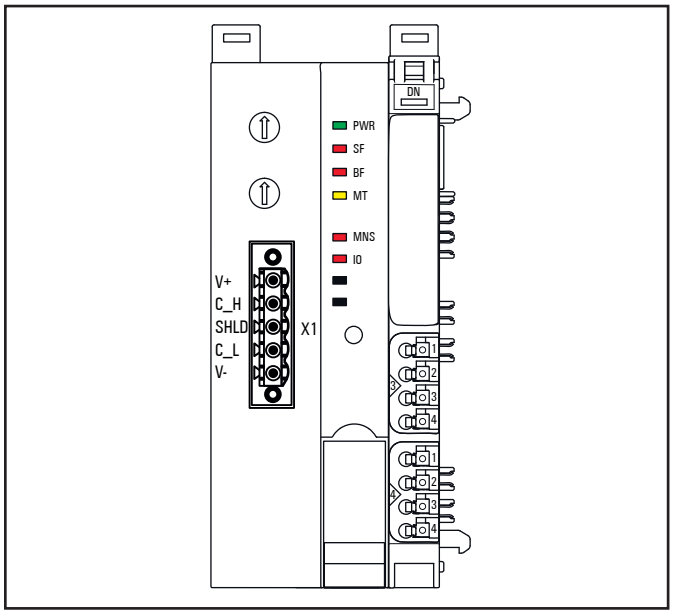

LED status indicators UR20-FBC-DN, troubleshooting see Chapter 12

PWR	Power LED	**Green**: Supply voltage connected **Red:** Coupler not yet started completely or hardware error
SF	Collective error	**Red:** Configuration error, or error in the coupler, or error in a module, or there is a new diagnostic message **Red flashing**: Station in Force mode
BF	Bus failure	**Red:** No connection to the fieldbus **Red flashing**: Configuration error, no connection to the control unit, or error in the parameter set or slave address error or firmware update is running **Red/green flickering:** Auto baud rate detection in progress
MT	Maintenance	**Yellow**: Error on the system bus or fieldbus
MNS	Module/Network status	**Off:** Duplicate MAC ID check active **Green**: DeviceNet connection established, device status OK **Green flashing**: No DeviceNet connection established, device status OK **Red**: Bus failure **Red flashing**: Bus connection timeout
IO	Input/Output	**Green**: Data exchange active, outputs are accessed by the PLC **Green flashing**: Station in idle mode (outputs are not accessed by the PLC) **Red**: At least one stack differs from the start configuration (e.g. one module has been pulled) **Red flashing**: Diagnostic message on at least one module

Addressing

The fieldbus coupler is addressed via the two rotary switches.

A maximum of 64 addresses (0 to 63) can be assigned. Each address may be assigned only **once** in the overall bus structure. The default setting is 63.

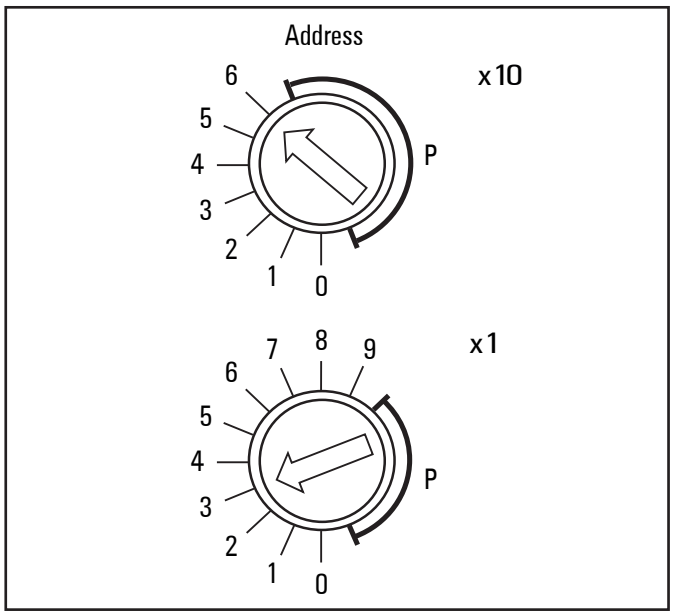

Default setting UR20-FBC-DN: Address = 63

- ► Use the **x10** rotary switch to set the decade and the **x1** rotary switch to set the units digit.
- ► In order to set an address >63 turn one of the rotary switches to the **P** range (“programmable”) and programm the address via the PLC.

Addressing examples:

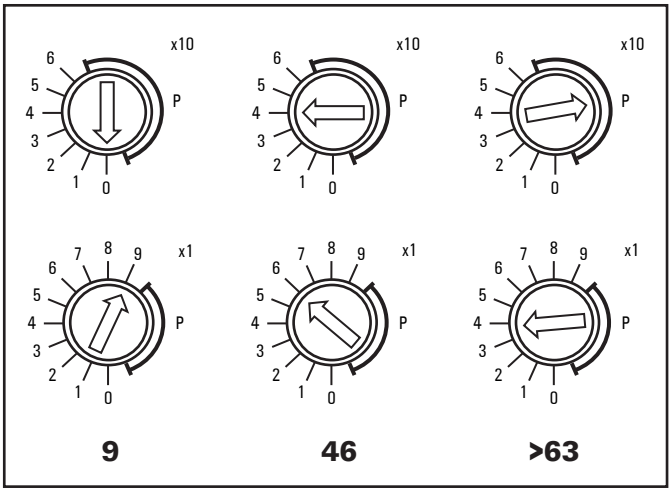

Examples for addressing the UR20-FBC-DN

DeviceNet address **9**: 0x10, 9x1
DeviceNet address **46**: 4x10, 6x1
DeviceNet address **>63**: at least one switch in the “P” area

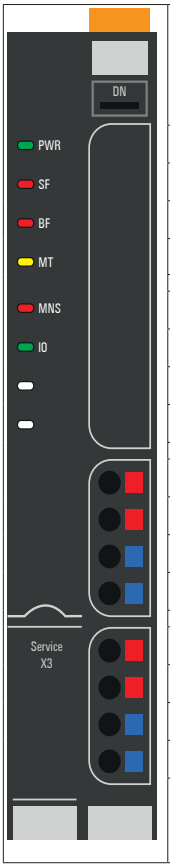

	Coupler power supply LED green: supply voltage >18 V red: at least one current path <18 V
3.1	Green: Input current path supply voltage > 18 V DC
3.2	Red: Input current path supply voltage < 18 V DC
3.4	Red: Internal fuse defective
4.1	Green: Output current path supply voltage > 18 V DC
4.2	Red: Output current path supply voltage < 18 V DC
4.4	Red: Internal fuse defective

LED indicators UR20-FBC-DN, troubleshooting see Chapter 12

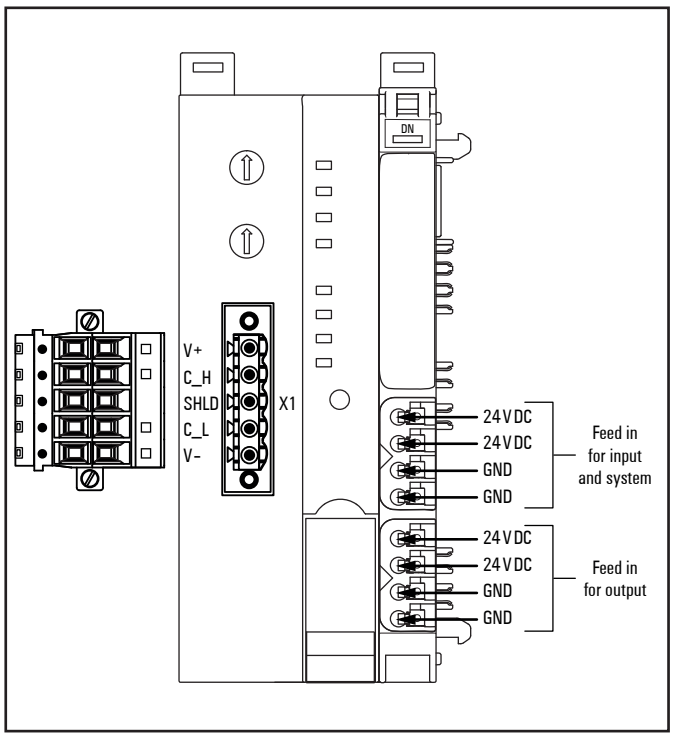

Connection diagram UR20-FBC-DN

ATTENTION

Risk of material damage!

In the case of a maximum power supply of >8 A and a maximum temperature of >+55 °C, all four contacts must be connected with 1.5 mm² wiring!

Pin assignment of the 5 pole socket

Pin	Cable colour	Signal	Description
5	Red	V+	Fieldbus power supply (between 11 and 25 V)
4	White	C_H	CAN+ bus line
3	Bare	SHLD	Cable shield - internally conected to FE via 1 M in parallel with 10 nF/500 V
2	Blue	C_L	CAN- bus line
1	Black	V-	Fieldbus power ground

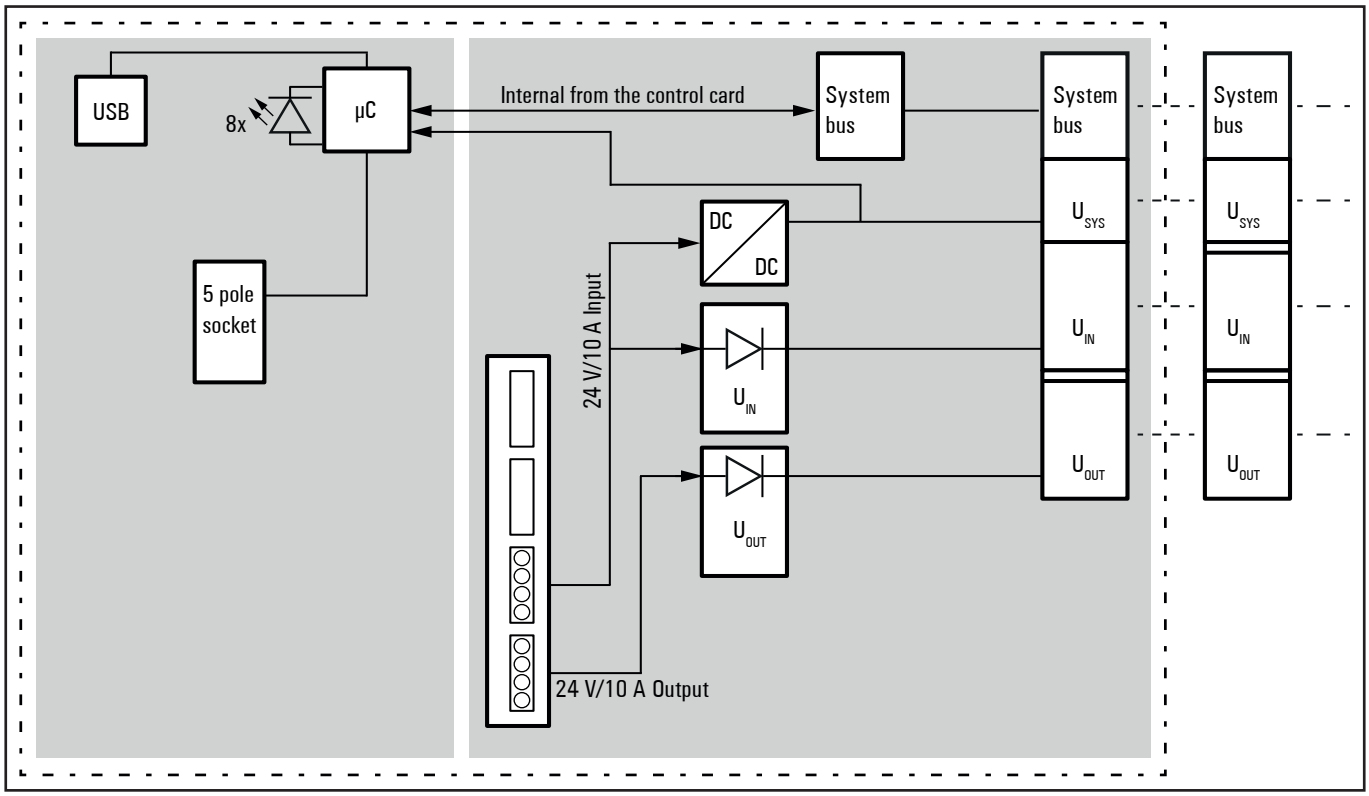

Block diagram UR20-FBC-DN

Technical data UR20-FBC-DN (Item No. 1334900000)

System data		
Connection	Socket for 5-pole PCB plug-in connector	
Fieldbus protocol	DeviceNet	
Input data width	max. 504 Byte	
Output data width	max. 504 Byte	
Parameter data	max. 64 x 64 Byte	
Diagnostic data	max. 64 x 47 Byte	
Number of modules	max. 64 active	
Configuration interface	Micro USB 2.0	
Transfer rate	Fieldbus	max. 500 kBit/s
	u-remote system bus	max. 48 MBit/s
Supply		
Supply voltage for system and inputs	24 V DC +20% / -15%	
Supply voltage for outputs	24 V DC +20% / -15%	
Feed-in current[1] for input modules	max. 10 A	
Feed-in current[1] for output modules	max. 10 A	
Current consumption from system current path I_{SYS}	75 mA (+ 15 mA from DeviceNet supply)	
Temperature data[1]		
Operation	Horizontal installation	-20 °C to +60 °C / -4 °F ... +140 °F (2 x 10 A power supply)
	Vertical installation	-20 °C to +55 °C / -4 °F ... +131 °F (2 x 8 A power supply)
Storage, transport		-40 °C to +85 °C / -40 °F ... +185 °F
Connection data		
Type of connection	„PUSH IN“	
Conductor cross-section	Single-wired, fine-wired	0,14 ... 1,5 mm² (AWG 26 ... 16)
Weight		
Weight (operational status)	225 g (without PCB plug-in connector)	
General data, see Section 3.2		

1) Restrictions for the use in potentially explosive atmosphere: Only horizontal installation and max. 8 A power supply!

Overview of editable parameters UR20-FBC-DN

Parameter	Optional values	Default
IP-Address USB port	192.168.1.202, 192.168.2.202, 192.168.3.202 ... 192.168.20.202	192.168.1.202
Baud rate	125 kB/s / 250 kB/s / 500 kB/s	
Power up baud rate	125 kB/s / 250 kB/s / 500 kB/s / Auto baud / Set by PLC	125 kB/s
MAC-ID	- Adjustable with rotary switches (values 0 ... 63) - Adjustable via PLC (Precondition: a value >63 must be set with the rotary switches)	
Assembly selector	Asm 101 & 102 / Asm 103 & 104	Asm 101 & 102
Output behaviour on idle state	All outputs off (0) / Enable substitute values (1) / Hold last value (2)	All outputs off
Process alarm	disabled / enabled	disabled
Diagnostic alarm	disabled / enabled	disabled
Output behaviour on fieldbus error	All outputs off / Enable substitute value / Hold last value	All outputs off
Module behaviour on hot swap	Continue data exchange / Behaviour as with fieldbus error	Continue data exchange
Data format	Motorola / Intel	Intel
Length of assembly input	2 ... 504	
Length of assembly output	2 ... 504	
Major Revision	1 ... 127	Significant changes concerning form and function have been realised in a “Major revision“.
Minor Revision	0 ... 255	In a “Minor revision“ changes that do not affect the user behaviour have been realised.

Process data

Status word UR20-FBC-DN

Bit	Name	Description
0	Summarized module diagnosis	A diagnosis is available for at least one module with diagnostics functionality.
1	Errorbit 1	Reserve bit 1, currently not used
2	Errorbit 2	Reserve bit 2, currently not used
3	Systembus error	Error on the system bus. Communication with the connected modules is disrupted.
4	Unacknowledged diagnosis alarm	Unacknowledged diagnosis alarm
5	Unacknowledged process alarm	Unacknowledged process alarm
6	I/O-Configuration error	Deviation in the configuration. The module list has changed. The list of configured modules (Configured Module Ident List class 0x64 (101), instance 0x01 (1), attribute 0x70 (112)) differs from the module list detected by the coupler (Detected Module Ident List class 0x64 (101), instance 0x01 (1), attribute 0x6F (111)).
7	Master configuration error	Master configuration error. The list of configured modules (Configured Module Ident List class 0x64 (101), instance 0x01, attribute 0x70 (112)) differs significantly from the module list detected by the coupler (Detected Module Ident List class 0x64 (101), instance 0x01 (1), attribute 0x6F (111)) ab. No process data can be exchanged with the modules.
8	Errorbit 8	Reserve bit 8, currently not used
9	Errorbit 9	Reserve bit 9, currently not used
10	Force mode active	Force mode was activated through the web server. Process data cannot be exchanged between the master and forced channels.
11	Errorbit 11	Reserve bit 11, currently not used
12	Errorbit 12	Reserve bit 12, currently not used
13	Voltage UOUT error	Error in the voltage supply of output current path
14	Voltage UIN error	Error in the voltage supply of system and input current path
15	Errorbit 15	Reserve bit 15, currently not used

Control word UR20-FBC-DN

Bit	Name	Description
0	controlbit 0	for future use
1	controlbit 1	for future use
...	...	...
15	controlbit 15	for future use

Packed process data UR20-FBC-DN

Input data	
Assembly 101	Assembly 103
2 Byte Status word	2 Byte Status word
X Byte Process data of the modules	X Byte Process data of the modules
	8 Byte Diagnostic data status word
Output data	
Assembly 102	Assembly 104
2 Byte Control word	2 Byte Control word
X Byte Process data of the modules	X Byte Process data of the modules
	8 Byte Diagnostic data control word

Object descriptions UR20-FBC-DN: CIP Common classes

Class	Attribute hex	Attribute dez	Get	Set	NV[1]	Data type[2]	Name	Description
Identity 0x01 (1)								
	Instance 0x00 (0)							
	0x01	1	x			UINT	Revision	Revision of this object
	0x02	2	x			UINT	Max Instance	Highest possible instance of this object
	Instance 0x01 (1) [3]							
	0x01	1	x		x	UINT	Vendor ID	Vendor ID: 1015
	0x02	2	x		x	UINT	DeviceType	General type of device: 0x0C
	0x03	3	x		x	UINT	Product Code	Vendor assigned product code: 33490
	0x04	4	x		x	Struct{USINT,USINT}	Revision {Major, Minor}	Revision of the u-remote coupler
	0x05	5	x			WORD	Device Status	Bit0: Owned; Bit2= Configured; Bit4-7:Extended device status; Bit8: Minor recoverable fault; Bit9: Minor unrecoverable fault; Bit10: Major recoverable fault; Bit 11: Major unrecoverable fault; Bit12-15: Extended device status 2
	0x06	6	x		x	UDINT	Serial Number	Serial number of the device; 32 Bit value
	0x07	7	x		x	SHORT_STRING	Product Name	Product name: UR20-FBC-DN
	0x08	8	x			USINT	State	Status of the device: 0 = Nonexistent, 1 = Device Self Testing, 2 = Standby, 3 = Operational, 4 = Major Recoverable Fault, 5 = Major Unrecoverable Fault, 6 – 254 = Reserved (255 = Default Value)
	0x0A	10	x	x	x	USINT	Heartbeat Intervall	Periodically sent messages that indicates the device is still there. The default value is 0 (transmission of the heartbeat message is disabled).
DeviceNet 0x03 (3)								
	Instanz 0x00 (0)							
	0x01	1	x			UINT	Revision	Revision of this object
	Instanz 0x01 (1) [4]							
	0x01	1	x	x	x	USINT	MAC ID	Network address of the device
	0x02	2	x		x	USINT	Baudrate	Baud rate of the device
	0x03	3	x	x	x	USINT	Bus-Off Interrupt	With "0" a communication fault will be sent on Bus-Off-Interrupt (s. LED). With "1" a reset of the CAN driver will be run.
	0x04	4	x	x		USINT	Bus-Off counter	Counter for Bus-Off-Interrupts
	0x05	5		x		Struct{Byte,USINT}	Allocation Information	Allocation Information. (Byte = Predefined Master/Slave Connection Set. Attribute is neede, if the Predefined Master/Slave Connection Set is supported. USINT = MAC ID)
	0x06	6	x			BOOL	MAC ID Switch Changed	Rotary switch for the MAC-ID has been changed
	0x07	7	x			BOOL	Baudrate Switch Changed	The baud rate has been changed via the web server
	0x08	8	x			USINT	MAC ID Switch Value	MAC-ID value set by the rotary switches
	0x09	9	x			USINT	Baudrate Switch Value	Value of the baud rate switch in the web server

1) Non volatile (data are saved permanently); 2) For the description of data types refer to table Data types; 3) Reset; 4) Alloc Group2 idset; Release group2 id set; 5) Create; 6) Delete

Object descriptions UR20-FBC-DN: CIP Common classes

Class	Attribute hex	Attribute dez	Get	Set	NV[1]	Data type[2]	Name	Description
Assembly 0x04 (4)								
	Instance 0x00 (0)							
	0x01	1	x			UINT	Revision	Revision of this object
	0x03	3	x			UINT	Number of Instances	Current number of Instances
	Instanceen 0x65 ... 0x68 (101 ... 104)							
	0x03	3	x	x		Array of BYTE	Data	Process data
	0x04	4	x			UINT	Size	Size of process data
Connection Class 0x05 (5)								
	Instance 0x00 (0) [5]							
	0x01	1	x			UINT	Revision	Revision of this object
	Instance 0x01 (1) [3] [6]							
	0x01	1	x			USINT	State	Status of this object
	0x02	2	x			USINT	Instance type	I/O or messaging connection
	0x03	3	x			BYTE	Transportclass trigger	Behaviour of the connection
	0x04	4	x			UINT	Produced connection ID	Value in the CAN identifier field for a message sent by the device
	0x05	5	x			UINT	Consumed connection ID	Value in the CAN identifier field for a message received by the device
	0x06	6	x			BYTE	Initial communication characteristic	Defines the message group(s) associated with this connection
	0x07	7	x			UINT	Produced connection size	Max. number of bytes for this connection
	0x08	8	x			UINT	Consumed connection size	Max. number of bytes for this connection
	0x09	9	x	x		UINT	Expected packet rate	Time intervall between two messages for this connection
	0x0C	12	x	x		USINT	Watchdog timeout action	Defines how to react on connection activites and Watchdog timeouts
	0x0D	13	x			UINT	Produced connection path length	Number of bytes in the produced connection path length attribute
	0x0E	14	x	x		Packed EPATH	Produced connection path	Specifies the application object, the data of which are produced by this connection
	0x0F	15	x			UINT	Consumed connection path length	Number of bytes in the consumed connection path length attribute
	0x10	16	x	x		Packed EPATH	Consumed connection path	Specifies the application object, the data of which are consumed by this connection
	0x11	17	x	x		UINT	Production inhibit time	Specifies the minimum time to produce new data
Acknowledge Handler 0x2B (43)								
	Instance 0x00 (0)							
	0x01	1	x			UINT	Revision	Revision of this object
	0x02	2	x			UINT	Max Instance	Maximum number of Instances
	Instance 0x01 (1)							
	0x01	1	x	x		UINT	Acknowledge Timer	Time intervall waiting for acknowledgement
	0x02	2	x	x		USINT	Retry Limit	Number of Acknowledge Timeouts that must be achieved before the application gets informed

1) Non volatile (data are saved permanently); 2) For the description of data types refer to table Data types; 3) Reset; 4) Alloc Group2 idset; Release group2 id set; 5) Create; 6) Delete

Object descriptions UR20-FBC-DN: CIP Common classes

Class	Attribute hex	Attribute dez	Get	Set	NV[1]	Data type[2]	Name	Description
	0x03	3	x	x		UINT	COS Producing connection instance	Connection Instance waiting for the acknowledgement of produced data
	0x04	4	x			BYTE	Ack List size	Maximum number of members in the Acknowledge List
	0x05	5	x			BYTE and ARRAY of UINT	Ack List	List of active connections receiving acknowledge
	0x06	6	x			BYTE	Data with Ack Path List Size	Maximum number of data in the acknowledge path list
	0x07	7	x			BYTE and ARRAY of UINT, USINT and padded EPATH	Data with Ack Path List	List of connection instances and consuming application pairs

1) Non volatile (data are saved permanently); 2) For the description of data types refer to table Data types; 3) Reset; 4) Alloc Group2 idset; Release group2 id set; 5) Create; 6) Delete

Object descriptions UR20-FBC-DN: Vendor specific classes

Class	Attribute hex	Attribute dez	Get	Set	NV[1]	Data type[2]	Name	Description
Gateway 0x64 (100)								
	Instance 0x00 (0)							
	0x64	100	x			UINT	Revision	Revision of this object
	0x65	101	x			USINT	Max Instance	Highest possible instance of this object
	0x66	102	x			USINT	Number of Instances	Current number of Instances
	0x67	103	x			USINT	Max Class Attribute	ID of the last attribute of this class in instance 0
	Instance 0x01 (1)							
	0x64	100	x		x	USINT	Max Attributes	ID of the last attribute of this class in the other instances
	0x65	101	x		x	STRING	Hardware Version	Hardware version of the coupler
	0x66	102	x		x	STRING	Software Version	Software version of the coupler
	0x67	103	x		x	STRING	Serial Number	Serial number of the coupler
	0x68	104	x			WORD	Status Word	Status word as in assembly
	0x69	105	x	x		WORD	Control Word	Control word as in assembly
	0x6A	106	x	x	x	BYTE	Parameter Fieldbus error	Parameter “Output behaviour on fieldbus error”; All outputs off (0) / Enable substitute values (1) / Hold last value (2)
	0x6B	107	x	x	x	BOOL	Parameter Hot-Swap	Parameter “Module behaviour on hot swap”; Continue data exchange (0) / Behaviour like fieldbus error (1)
	0x6C	108	x			Array of Struct{USINT,BYTE,Array of 2 BYTE}	Diag Summary	Diag bytes of all modules with diag: Byte 1: Slot number; Byte 2: Slot state; Byte 3-4: First two bytes of diag
	0x6D	109	x	x	x	BOOL	Parameter Data format	Parameter “Data format”; Motorola (0) / Intel (1)
	0x6E	110	x	x		Array of 4 BYTE	Save/Restore Module Parameter	Write SAVE to save the module parameter; Write LOAD to load the defaults of the module parameter
	0x6F	111	x			Array of 64 DWORD	Current Module List	List of currently plugged modules (260*4 bytes). First entry is allways Zero (index), subsequent modules get their module ID from the coupler.

1) Non volatile (data are saved permanently)
2) For the description of data types refer to table Data types

Object descriptions UR20-FBC-DN: Vendor specific classes

Class	Attribute hex	Attribute dez	Get	Set	NV[1]	Data type[2]	Name	Description
	0x71	113	x	x	x	BOOL	Diagnostic Alarm	Parameter "Diagnosis alarm"; disabled (0) / enabled (1)
	0x72	114	x	x	x	BOOL	Process Alarm	Parameter "Process alarm"; disabled (0) / enabled (1)
	0x73	115	x	x		Array of BYTE	Module Parameter	Array containing all parameter of all modules
	0x74	116	x	x	x	USINT	Assembly Selector	Assemblies to be used for the connection (0= Asm 101 & 102, 1 = Asm 103 & 104)
	0x75	117	x	x	x	BYTE	Behaviour on Idle	Parameter "Behaviour on idle state"; All outputs off (0) / Enable substitute values (1)/ Hold last value (2)
	0x76	118	x		x	Array of 8 BYTE	Unacknowledged Diagnosis	In the event of an unackklowledged diagnosis the Bit in for the respective module is set to 1 (Bit 0 for the first module of the station, Bit 63 for the 64th module).
Slot 0x65 (101)								
	Instance 0x00 (0)							
	0x64	100	x			UINT	Revision	Revision of this object
	0x65	101	x			USINT	Max Instance	Highest possible instance of this object
	0x66	102	x			USINT	Number of Instances	Current number of instances
	0x67	103	x			USINT	Max Class Attribute	ID of the last attribute of this class in instance 0
	Instances 0x01 ... 0x40 (1 ... 64)							
	0x64	100	x		x	USINT	Max Attributes	ID of the last instance attribute
	0x65	101	x			STRING	Name	Name of the module
	0x66	102	x			STRING	Product Code	Order number of the module
	0x67	103	x			STRING	Serial Number	Serial number of the module
	0x68	104	x			UDINT	Module ID	ID of the module
	0x69	105	x			STRING	Hardware Version	Hardware version of the module
	0x6A	106	x			STRING	Software Version	Software version of the module
	0x6B	107	x			STRING	MX Version	MX version of the module
	0x6C	108	x			BYTE	Slot State	State of the module: 0x01: ok; 0x80: slot empty; 0x81: wrong module; 0x82: diagnosis active
	0x6D	109	x			UINT	Input Bit Length	Length of input data in Bit
	0x6E	110	x			UINT	Output Bit Length	Length of output data in Bit
	0x6F	111	x			UINT	Parameter Byte Length	Length of parameter data in Byte
	0x70	112	x			UINT	Diag Byte Length	Length of diagnosis data in Byte
	0x71	113	x			Array of BYTE	Process Data In	Input data of the module
	0x72	114	x	x		Array of BYTE	Process Data Out	Output data of the module
	0x73	115	x	x		Array of BYTE	Parameter Data	Parameter data of the module
	0x74	116	x			Array of BYTE	Diagnosis Data	Diagnosis data of the module
	0x75	117	x			Array of BYTE	Process Alarm Data	Process alarm data of the module
	0x76	118	x	x		Array of BYTE	Slot Config Assembly	Configuration assembly for parameterising the modules (Rockwell controls)

1) Non volatile (data are saved permanently)
2) For the description of data types refer to table Data types

Object descriptions UR20-FBC-DN: Vendor specific classes

Class	Attribute hex	Attribute dez	Get	Set	NV[1]	Data type[2]	Name	Description
Process Data 0x66 (102)								
	Instance 0x00 (0)							
	0x64	100	x			UINT	Revision	Revision number
	0x65	101	x			USINT	Max Instance	Maximum number of instances
	0x66	102	x			USINT	Number of Instances	Current number of instances
	0x67	103	x			USINT	Max Class Attribute	ID of the last attribute of this class in instance 0
	Instance 0x01 (1)							
	0x64	100	x		x	USINT	Max Attributes	ID of the last instance attribute
	0x65	101	x			Array of BYTE	Process Data In	All input data
	0x66	102	x			UINT	Length Process Data In	Total length of input data
	0x67	103	x	x		Array of BYTE	Process Data Out	All output data
	0x68	104	x			UINT	Length Process Data Out	Total length of output data
	0x69	105	x			Array of 8 BYTE	Diag Status	Diagnosis messages as in assembly
	0x6A	106	x			Array of 8 BYTE	Diag Control	Diagnosis control as in assembly
Module Parameter 0x67 (103)								
	Instance 0x00 (0)							
	0x64	100	x			UINT	Revision	Revision of this object
	0x65	101	x			USINT	Max Instance	Maximum number of instances
	0x66	102	x			USINT	Number of Instances	Current number of instances
	0x67	103	x			USINT	Max Class Attribute	ID of the last attribute of this class in instance 0
	Instances 0x01 ... 0x40 (1 ... 64)							
	0x64	100	x			USINT	Max Attributes	ID of the last instance attribute
	0x65	101	x	x		Depend on Parameter	First Parameter	First parameter
	0x66	102	x	x		Depend on Parameter	Second Parameter	Second parameter

1) Non volatile (data are saved permanently)
2) For the description of data types refer to table Data types

Data types UR20-FBC-DN

Data type	Size	Value range
USINT	1 byte	0 ... 255
UINT	2 byte	0 ... 65535
UDINT	4 byte	0 ... (2^{32}-1)
BOOL	1 bit	
BYTE	8 bits	
WORD	16 bits	
DWORD	32 bits	
STRING	2 Byte length indicator 1 Byte per character	
SHORT_STRING	1 Byte length indicator 1 Byte per character	
STRING	Structure of strings	
Padded EPATH		
Packed EPATH		

Coupler-dependent data width of I/O modules UR20-FBC-DN

Item No.	Module	Configuration	Parameters	Diagnostics	Process data	
					Input	Output
		Bytes	Bytes	Bytes	Bytes	Bytes
1334900000	UR20-FBC-DN	-	11	47	2/10[1)]	2/10[1)]
1315170000	UR20-4DI-P	4	4	47	1	–
2009360000	UR20-4DI-P-3W	4	4	47	1	–
1315180000	UR20-8DI-P-2W	4	8	47	1	–
1394400000	UR20-8DI-P-3W	4	8	47	1	–
1315190000	UR20-8DI-P-3W-HD	4	8	47	1	–
1315200000	UR20-16DI-P	4	–	47	2	–
1315210000	UR20-16DI-P-PLC-INT	4	–	47	2	–
1460140000	UR20-2DI-P-TS	–	–	–	–	–
1460150000	UR20-4DI-P-TS	–	–	–	–	–
1315350000	UR20-4DI-N	4	4	47	1	–
1315370000	UR20-8DI-N-3W	4	8	47	1	–
1315390000	UR20-16DI-N	4	–	47	2	–
1315400000	UR20-16DI-N-PLC-INT	4	–	47	2	–
1550070000	UR20-4DI-2W-230V-AC	4	–	47	1	–
2457240000	UR20-8DI-ISO-2W	4	8	47	1	–
1315220000	UR20-4DO-P	4	1	47	–	1
1315230000	UR20-4DO-P-2A	4	1	47	–	1
1394420000	UR20-4DO-PN-2A	4	1	47	–	1
1315240000	UR20-8DO-P	4	1	47	–	1

Coupler-dependent data width of I/O modules UR20-FBC-DN

Item No.	Module	Configuration	Parameters	Diagnostics	Process data	
					Input	Output
		Bytes	Bytes	Bytes	Bytes	Bytes
1509830000	UR20-8DO-P-2W-HD	4	1	47	–	1
1315250000	UR20-16DO-P	4	–	47	–	2
1315270000	UR20-16DO-P-PLC-INT	4	–	47	–	2
1315410000	UR20-4DO-N	4	1	47	–	1
1315420000	UR20-4DO-N-2A	4	1	47	–	1
1315430000	UR20-8DO-N	4	1	47	–	1
1315440000	UR20-16DO-N	4	–	47	–	2
1315450000	UR20-16DO-N-PLC-INT	4	–	47	–	2
2457250000	UR20-4DO-ISO-4A	4	1	47	–	1
2456530000	UR20-8DIO-P-3W-DIAG	4	8	47	1	1
1315540000	UR20-4RO-SSR-255	4	1	47	–	1
1315550000	UR20-4RO-CO-255	4	1	47	–	1
1315600000	UR20-2PWM-PN-0.5A	4	8	47	4	12
3036960000	UR20-2PWM-PN-0.5A-V2	4	8	47	4	12
1315610000	UR20-2PWM-PN-2A	4	8	47	4	12
3036950000	UR20-2PWM-PN-2A-V2	4	8	47	4	12
2697910000	UR20-2PWM-I-2.5A-2DI-P	4	72	47	8	6
2489830000	UR20-1SM-50W-6DI2DO-P	4	21	47	16	16
2705620000	UR20-2AI-UI-16	4	4	47	4	–
2566090000	UR20-2AI-UI-16-DIAG	4	6	47	4	–
1315620000	UR20-4AI-UI-16	4	6	47	8	–
1315690000	UR20-4AI-UI-16-DIAG	4	8	47	8	–
1993880000	UR20-4AI-UI-DIF-16-DIAG	4	8	47	8	–
2544660000	UR20-4AI-UI-DIF-32-DIAG	4	40	47	16	–
2566960000	UR20-4AI-UI-ISO-16-DIAG	4	23	47	8	–
1506920000	UR20-4AI-UI-16-HD	4	6	47	8	–
1506910000	UR20-4AI-UI-16-DIAG-HD	4	8	47	8	–
1394390000	UR20-4AI-UI-12	4	6	47	8	–
1529370000	UR20-8AI-I-16-DIAG	4	11	47	16	–
1315650000	UR20-8AI-I-16-HD	4	10	47	16	–
1315720000	UR20-8AI-I-16-DIAG-HD	4	12	47	16	–
1315670000	UR20-8AI-I-PLC-INT	4	10	47	16	–
1315700000	UR20-4AI-RTD-DIAG	4	28	47	8	–
2456540000	UR20-4AI-RTD-HP-DIAG	4	44	47	8	–
1315710000	UR20-4AI-TC-DIAG	4	28	47	8	–
2001670000	UR20-4AI-R-HS-16-DIAG	4	63	47	8	–
2555940000	UR20-8AI-RTD-DIAG-2W	4	10	47	16	–
3039320000	UR20-15AI-U-16-DIAG	4	24	47	9	1
1990070000	UR20-2AI-SG-24-DIAG	4	26	47	16	16

Coupler-dependent data width of I/O modules UR20-FBC-DN

Item No.	Module	Configuration	Parameters	Diagnostics	Process data	
					Input	Output
		Bytes	Bytes	Bytes	Bytes	Bytes
2007420000	UR20-3EM-230V-AC	4	27	47	16	16
2920830000	UR20-3EM-400V-AC-CT1A	4	40	47	32	8
2920840000	UR20-3EM-400V-AC-CT5A	4	40	47	32	8
2920850000	UR20-3EM-400V-AC-RC	4	40	47	32	8
2920860000	UR20-3EM-400V-AC-333mV	4	40	47	32	8
2705630000	UR20-2AO-UI-16	4	6	47	–	4
2566100000	UR20-2AO-UI-16-DIAG	4	7	47	–	4
2566970000	UR20-2AO-UI-ISO-16-DIAG	4	14	47	–	4
1315680000	UR20-4AO-UI-16	4	12	47	–	8
2453880000	UR20-4AO-UI-16-M	4	12	47	–	8
1315730000	UR20-4AO-UI-16-DIAG	4	13	47	–	8
2453870000	UR20-4AO-UI-16-M-DIAG	4	13	47	–	8
1510690000	UR20-4AO-UI-16-HD	4	12	47	–	8
1506930000	UR20-4AO-UI-16-DIAG-HD	4	13	47	–	8
1315570000	UR20-1CNT-100-1DO	4	21	47	12	10
1315590000	UR20-2CNT-100	4	40	47	12	12
1315580000	UR20-1CNT-500	4	21	47	8	10
1508080000	UR20-2FCNT-100	4	2	47	20	12
1508090000	UR20-1SSI	4	8	47	6	0
1315750000	UR20-1COM-232-485-422	4	6	47	16	16
2826800000	UR20-1COM-232-485-422-V2	4	35	47	19	19
2007430000	UR20-1COM-SAI-PRO	4	–	47	1	0
3116480000	UR20-1COM-SAI-PRO-V2	4	–	47	1	0
2489840000	UR20-1COM-CANOPEN	4	37	47	3 – 128	3 – 128
3040800000	UR20-1COM-CAN	4	36	47	3 – 122	3 – 122
1315740000	UR20-4COM-IO-LINK	See manual for UR20-4COM-IO-LINK communication module				
2819690000	UR20-4COM-IO-LINK-V2	See manual for UR20-4COM-IO-LINK communication module				
1529780000	UR20-4DI-4DO-PN-FSOE	–	–	–	–	–
1529800000	UR20-8DI-PN-FSOE	–	–	–	–	–
1335060000	UR20-4DI-4DO-PN-FSPS	–	–	–	–	–
1335070000	UR20-8DI-PN-FSPS	–	–	–	–	–
1335030000	UR20-PF-O-1DI-SIL	4	–	47	4	–
1335040000	UR20-PF-O-2DI-DELAY-SIL	4	–	47	4	–
1335050000	UR20-PF-O-2DI-SIL	4	–	47	4	–
max. data (in Byte)		264	400	47	496/504[1)]	496/504[1)]

1) Depending on the process data assembly used (see page 134)

5.8 CANopen fieldbus coupler

The UR20-FBC-CAN fieldbus coupler is designed according to the international standard (EN 50325-4). It is the head module for the u-remote system bus, to which up to 64 active u-remote modules can be connected. The CANopen coupler has a 9-pole Sub-D connector (male) and supports the CiA DS401 device profile.
The coupler can be accessed with a system-independent web server application via the USB service interface. Thus, all information, such as diagnostics, status values and parameters, can be read and all connected modules can be simulated or forced.
The station's main power supply is integrated in the coupler. Power is supplied via two 4-pole connectors, separated into the input and output current paths.

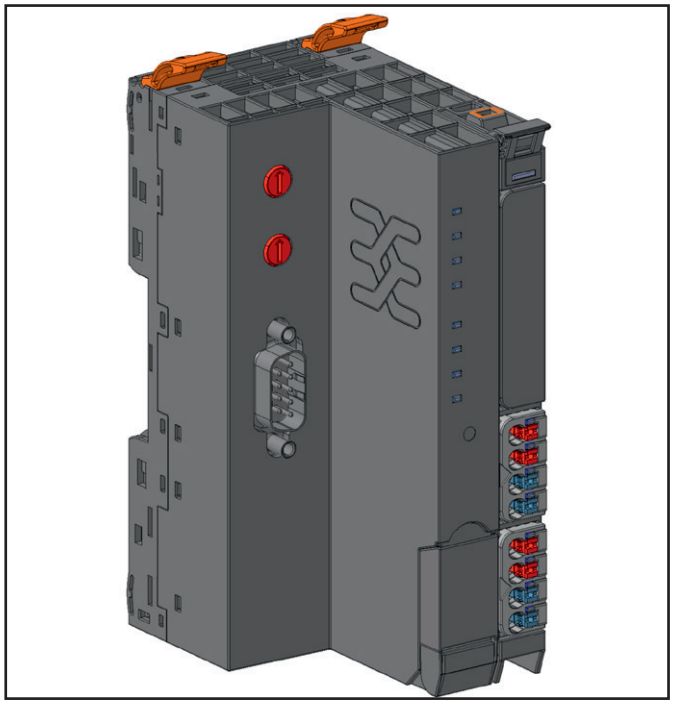

Fieldbus coupler UR20-FBC-CAN (Item No. 1334890000)

Status indicators

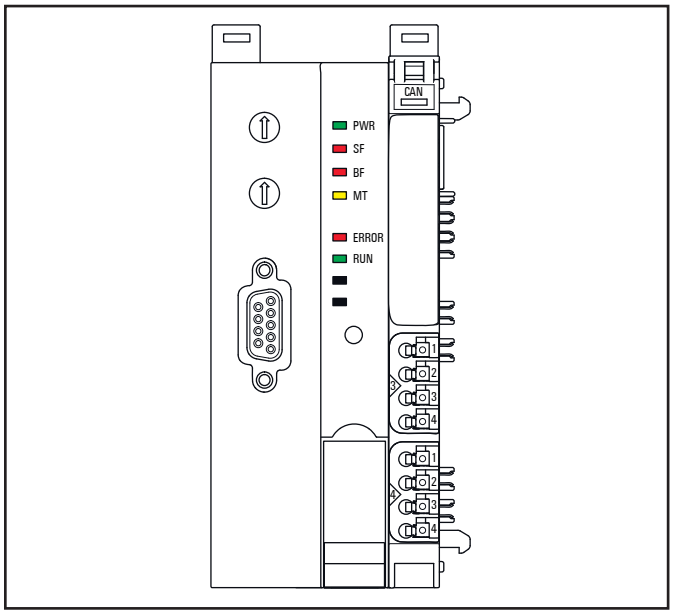

LED status indicators UR20-FBC-CAN, troubleshooting see Chapter 12

PWR	Power LED	**Green**: Supply voltage connected **Red:** Coupler not yet started completely or hardware error
SF	Collective error	**Red:** Configuration error, or error in the coupler, or error in a module, or there is a new diagnostic message **Red flashing**: Station in force mode
BF	Bus failure	**Red:** No connection to the fieldbus **Red flashing**: Configuration error, no connection to the control unit, or error in the parameter set or slave address error or firmware update is running
MT	Maintenance	**Yellow**: Error on the system bus or fieldbus
ERROR	Internal error	**Red**: No fieldbus communication (BusOFF) **Red fast flashing**[1]: Auto baud rate detection running **Red flashing**: Configuration error **Red one short flash**: CAN error counter reached warning level **Red two short flashes:** Node guarding (node guard or heartbeat)
RUN	Coupler state	**Green**: Fieldbus running (OPERATIONAL) **Green flashing**: Fieldbus in state PRE-OPERATIONAL **Green fast flashing**[1]: Auto baud rate detection running

1) Alternating

Addressing

The fieldbus coupler is addressed via the two rotary switches.

A maximum of 124 addresses (1 to 124) can be assigned. Each address may be assigned only **once** in the overall bus structure.
Addresses 1 and 2 are generally used by the control systems. Bus addresses 000 plus 126 and higher may not be used!

The most significant digit is set with rotary switch **H**, the least significant digit with rotary switch **L** . The switches are labelled in the hexadecimal numbering system (0 to 9, A=10, B=11, C=12, ... F = 15). A decimal/hexadecimal conversion table is provided in the annex.

Coding: Address = (H*16) + L

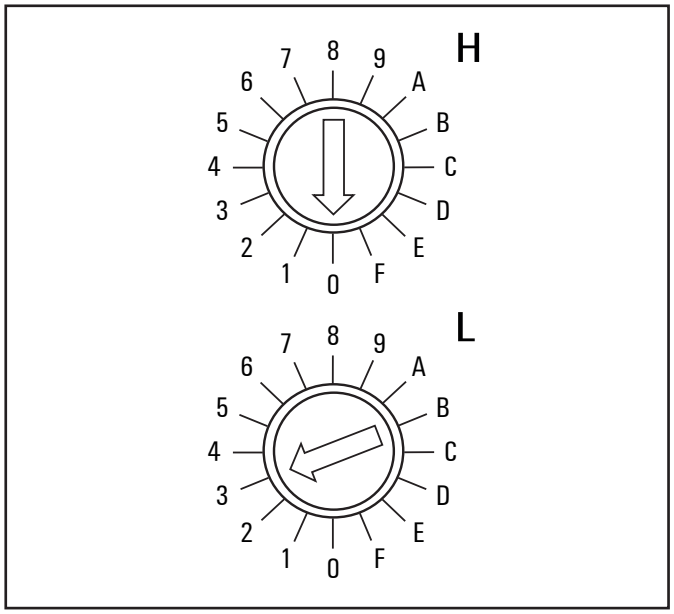

Default setting UR20-FBC-CAN: Address = 3

Addressing examples:

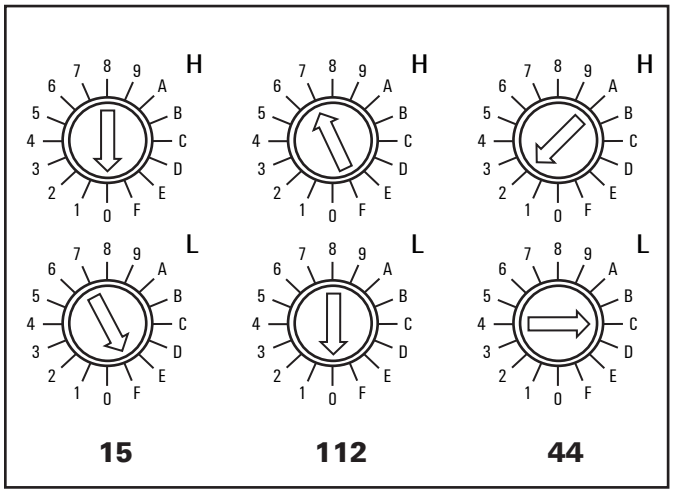

Examples for addressing the UR20-FBC-CAN

CANopen address **15**: H = 0, L = F
CANopen address **112**: H = 7, L = 0
CANopen address **44**: H = 2, L = C

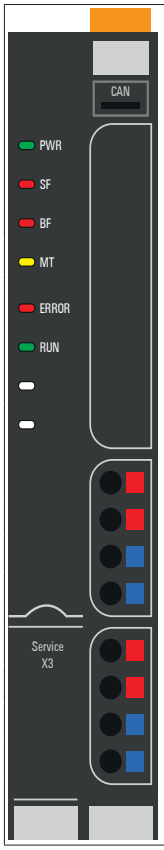

	Coupler power supply LED green: supply voltage >18 V red: at least one current path <18 V
3.1	Green: Input current path supply voltage > 18 V DC
3.2	Red: Input current path supply voltage < 18 V DC
3.4	Red: Internal fuse defective
4.1	Green: Output current path supply voltage > 18 V DC
4.2	Red: Output current path supply voltage < 18 V DC
4.4	Red: Internal fuse defective

LED indicators UR20-FBC-CAN, troubleshooting see Chapter 12

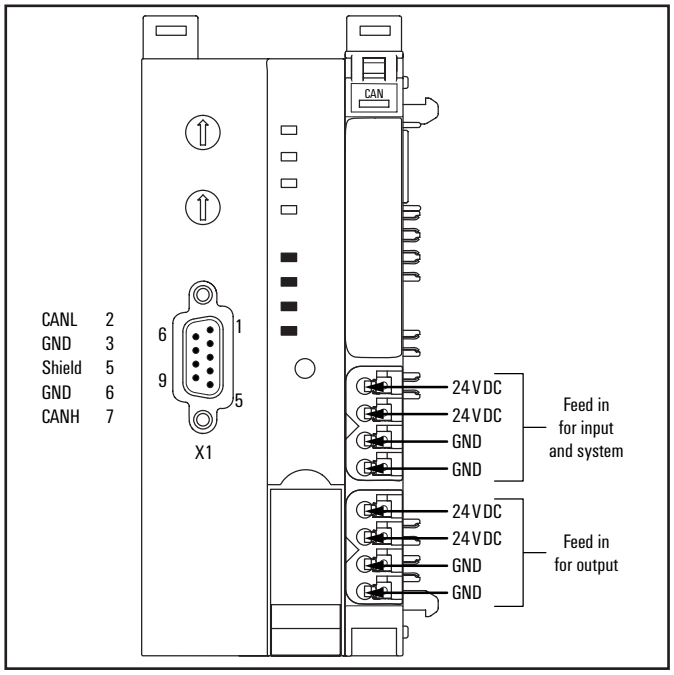

Connection diagram UR20-FBC-CAN

ATTENTION

Risk of material damage!

In the case of a maximum power supply of >8 A and a maximum temperature of >+55 °C, all four contacts must be connected with 1.5 mm² wiring!

Sub-D pin assignment

Pin	Signal	Description
1	-	not connected
2	CANL	CAN- bus line
3	GND	Ground
4	-	not connected
5	SHIELD	Cable shield
6	GND	Ground
7	CANH	CAN+ bus line
8	-	not connected
9	-	not connected
Case	SHIELD	Cable shield

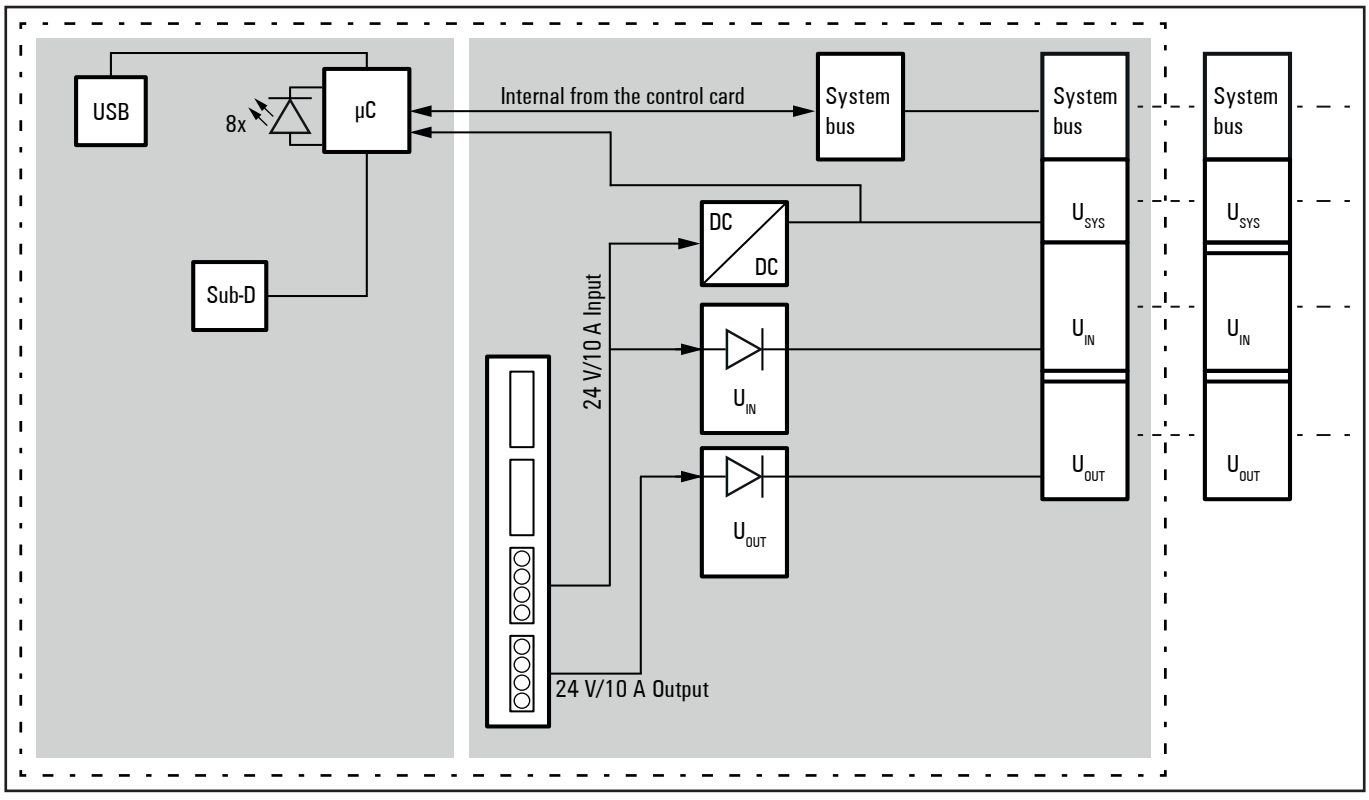

Block diagram UR20-FBC-CAN

Technical data UR20-FBC-CAN (Item No. 1334890000)

System data		
Connection	9-pole SUB-D connector (male)	
Fieldbus protocol	CANopen	
Input data width	max. 256 Byte	
Output data width	max. 256 Byte	
Parameter data	max. 244 bytes	
Diagnostic data	max. 244 bytes	
Number of modules	max. 64 active	
Configuration interface	Micro USB 2.0	
Transfer rate	Fieldbus	Max. 1 Mbps
	u-remote system bus	Max. 48 Mbps
Supply		
Supply voltage for system and inputs	24 V DC +20 % / -15 %	
Supply voltage for outputs	24 V DC +20 % / -15 %	
Feed-in current for input modules	max. 10 A	
Feed-in current for output modules	max. 10 A	
Current consumption from system current path I_{SYS}	90 mA	
Temperature data[1)]		
Operation	Horizontal installation	-20 °C to +60 °C / -4 °F ... +140 °F (2 x 10 A power supply)
	Vertical installation	-20 °C to +55 °C / -4 °F ... +131 °F (2 x 8 A power supply)
Storage, transport		-40 °C to +85 °C / -40 °F ... +185 °F
Connection data		
Type of connection	"PUSH IN"	
Conductor cross-section	Single-wired, fine-wired	0.14 ... 1.5 mm² (AWG 26 ... 16)
Weight		
Weight (operational status)	227 g	
General data, see Section 3.2		

1) Restriction for the use in potentially explosive atmosphere: Only horizontal installation!

Overview of editable parameters UR20-FBC-CAN

Parameter	Optional values	Default
IP address USB port[1)]	192.168.1.202, 192.168.2.202, 192.168.3.202 ... 192.168.20.202	192.168.1.202
Power up baud rate	Auto Baudrate, 10 kbit/s, 20 kbit/s, 50 kbit/s, 100 kbit/s, 125 kbit/s, 250 kbit/s, 500 kbit/s, 800 kbit/s,1000 kbit/s	Auto baud rate
CAN NMT	CANopen Device / Autostart	CANopen Device
Output behaviour on fieldbus error	All outputs off / Enable substitute value / Hold last value	All outputs off
Module behaviour on hot swap	Continue data exchange / behaviour as with fieldbus error	Continue data exchange
Data format	Motorola / Intel	Intel

1) Change requires restart of the fieldbus coupler

If the **Behaviour as with fieldbus error** option is set for the **Module behaviour with hot swap** parameter, it is possible that the outputs remain in the state that is parameterised for **Output behaviour with fieldbus error** after an electronic unit has been inserted. To avoid this, either a cyclical connection type should be selected when using the parameter option **Behaviour as for fieldbus error,** or the plugging event (Emergency) should be evaluated in the CANopen device and the current output image transmitted to the coupler when it is received.

Coupler-dependent data width of I/O modules UR20-FBC-CAN

Item No.	Module	Configuration	Parameters[1)]	Diagnostics	Process data	
					Input	Output
		Bytes	Bytes	Bytes	Bytes	Bytes
1334890000	UR20-FBC-CAN	–		47	–	–
1315170000	UR20-4DI-P	2		47	1	–
2009360000	UR20-4DI-P-3W	2		47	1	–
1315180000	UR20-8DI-P-2W	2		47	1	–
1394400000	UR20-8DI-P-3W	2		47	1	–
1315190000	UR20-8DI-P-3W-HD	2		47	1	–
1315200000	UR20-16DI-P	2		47	2	–
1315210000	UR20-16DI-P-PLC-INT	2		47	2	–
1315350000	UR20-4DI-N	2		47	1	–
1315370000	UR20-8DI-N-3W	2		47	1	–
1315390000	UR20-16DI-N	2		47	2	–
1315400000	UR20-16DI-N-PLC-INT	2		47	2	–
1550070000	UR20-4DI-2W-230V-AC	2		47	1	–
2457240000	UR20-8DI-ISO-2W	2		47	1	–
1315220000	UR20-4DO-P	2		47	–	1
1315230000	UR20-4DO-P-2A	2		47	–	1
1394420000	UR20-4DO-PN-2A	2		47	–	1

1) Each parameter is transferred individually by a SDO transfer (service data objects). For that reason there is no size limit, nevertheless every transfered parameter prolongs starting up the station.

Coupler-dependent data width of I/O modules UR20-FBC-CAN

Item No.	Module	Configuration	Parameters[1)]	Diagnostics	Process data	
					Input	Output
		Bytes	Bytes	Bytes	Bytes	Bytes
1315240000	UR20-8DO-P	2		47	–	1
1509830000	UR20-8DO-P-2W-HD	2		47	–	1
1315250000	UR20-16DO-P	2		47	–	2
1315270000	UR20-16DO-P-PLC-INT	2		47	–	2
1315410000	UR20-4DO-N	2		47	–	1
1315420000	UR20-4DO-N-2A	2		47	–	1
1315430000	UR20-8DO-N	2		47	–	1
1315440000	UR20-16DO-N	2		47	–	2
1315450000	UR20-16DO-N-PLC-INT	2		47	–	2
2457250000	UR20-4DO-ISO-4A	2		47	–	1
2456530000	UR20-8DIO-P-3W-DIAG	2		47	1	1
1315540000	UR20-4RO-SSR-255	2		47	–	1
1315550000	UR20-4RO-CO-255	2		47	–	1
1315600000	UR20-2PWM-PN-0.5A	2		47	4	12
3036960000	UR20-2PWM-PN-0.5A-V2	2		47	4	12
1315610000	UR20-2PWM-PN-2A	2		47	4	12
3036950000	UR20-2PWM-PN-2A-V2	2		47	4	12
2697910000	UR20-2PWM-I-2.5A-2DI-P	2		47	8	6
2489830000	UR20-1SM-50W-6DI2DO-P	2		47	16	16
2705620000	UR20-2AI-UI-16	2		47	4	–
2566090000	UR20-2AI-UI-16-DIAG	2		47	4	–
1315620000	UR20-4AI-UI-16	2		47	8	–
1315690000	UR20-4AI-UI-16-DIAG	2		47	8	–
1993880000	UR20-4AI-UI-DIF-16-DIAG	2		47	8	–
2544660000	UR20-4AI-UI-DIF-32-DIAG	2		47	16	–
2566960000	UR20-4AI-UI-ISO-16-DIAG	2		47	8	–
1506920000	UR20-4AI-UI-16-HD	2		47	8	–
1506910000	UR20-4AI-UI-16-DIAG-HD	2		47	8	–
1394390000	UR20-4AI-UI-12	2		47	8	–
1529370000	UR20-8AI-I-16-DIAG	2		47	16	–
1315650000	UR20-8AI-I-16-HD	2		47	16	–
1315720000	UR20-8AI-I-16-DIAG-HD	2		47	16	–
1315670000	UR20-8AI-I-PLC-INT	2		47	16	–
1315700000	UR20-4AI-RTD-DIAG	2		47	8	–
2456540000	UR20-4AI-RTD-HP-DIAG	2		47	8	–
1315710000	UR20-4AI-TC-DIAG	2		47	8	–
2001670000	UR20-4AI-R-HS-16-DIAG	2		47	8	–
2555940000	UR20-8AI-RTD-DIAG-2W	2		47	16	–
3039320000	UR20-15AI-U-16-DIAG	2		47	9	1

1) Each parameter is transferred individually by a SDO transfer (service data objects). For that reason there is no size limit, nevertheless every transfered parameter prolongs starting up the station.

Coupler-dependent data width of I/O modules UR20-FBC-CAN

Item No.	Module	Configuration	Parameters[1]	Diagnostics	Process data	
					Input	Output
		Bytes	Bytes	Bytes	Bytes	Bytes
1990070000	UR20-2AI-SG-24-DIAG	2		47	16	16
2007420000	UR20-3EM-230V-AC	2		47	16	16
2920830000	UR20-3EM-400V-AC-CT1A	2		47	32	8
2920840000	UR20-3EM-400V-AC-CT5A	2		47	32	8
2920850000	UR20-3EM-400V-AC-RC	2		47	32	8
2920860000	UR20-3EM-400V-AC-333mV	2		47	32	8
2705630000	UR20-2AO-UI-16	2		47	–	4
2566100000	UR20-2AO-UI-16-DIAG	2		47	–	4
2566970000	UR20-2AO-UI-ISO-16-DIAG	2		47	–	4
1315680000	UR20-4AO-UI-16	2		47	–	8
2453880000	UR20-4AO-UI-16-M	2		47	–	8
1315730000	UR20-4AO-UI-16-DIAG	2		47	–	8
2453870000	UR20-4AO-UI-16-M-DIAG	2		47	–	8
1510690000	UR20-4AO-UI-16-HD	2		47	–	8
1506930000	UR20-4AO-UI-16-DIAG-HD	2		47	–	8
1315570000	UR20-1CNT-100-1DO	2		47	12	10
1315590000	UR20-2CNT-100	2		47	12	12
1315580000	UR20-1CNT-500	2		47	8	10
1508080000	UR20-2FCNT-100	2		47	20	12
1508090000	UR20-1SSI	2		47	6	0
1315750000	UR20-1COM-232-485-422	2		47	16	16
2826800000	UR20-1COM-232-485-422-V2	2		47	19	19
2007430000	UR20-1COM-SAI-PRO	2		47	–	–
3116480000	UR20-1COM-SAI-PRO-V2	2		47	–	–
2489840000	UR20-1COM-CANOPEN	2		47	3 – 128	3 – 128
3040800000	UR20-1COM-CAN	2		47	3 – 122	3 – 122
1315740000	UR20-4COM-IO-LINK		See manual for UR20-4COM-IO-LINK communication module			
2819690000	UR20-4COM-IO-LINK-V2		See manual for UR20-4COM-IO-LINK communication module			
1335030000	UR20-PF-O-1DI-SIL	2		47	4	–
1335040000	UR20-PF-O-2DI-DELAY-SIL	2		47	4	–
1335050000	UR20-PF-O-2DI-SIL	2		47	4	–
max. data (in Byte)		128	–	3055	256	256

1) Each parameter is transferred individually by a SDO transfer (service data objects). For that reason there is no size limit, nevertheless every transfered parameter prolongs starting up the station.

5.9 POWERLINK fieldbus coupler

ETHERNET POWERLINK certified product

The UR20-FBC-PL fieldbus coupler is an Ethernet POWERLINK participant certified by the Ethernet POWERLINK Standardization Group (EPSG). The coupler is the head module for the u-remote system bus, to which up to 64 active u-remote modules can be connected. The POWERLINK coupler has two Ethernet ports, the integrated hub supports a line network structure.
The coupler can be accessed with a system-independent web server application via the USB service interface or the Ethernet. Thus, all information, such as diagnostics, status values and parameters, can be read and all connected modules can be simulated or forced.
The station's main power supply is integrated in the coupler. Power is supplied via two 4-pole connectors, separated into the input and output current paths.

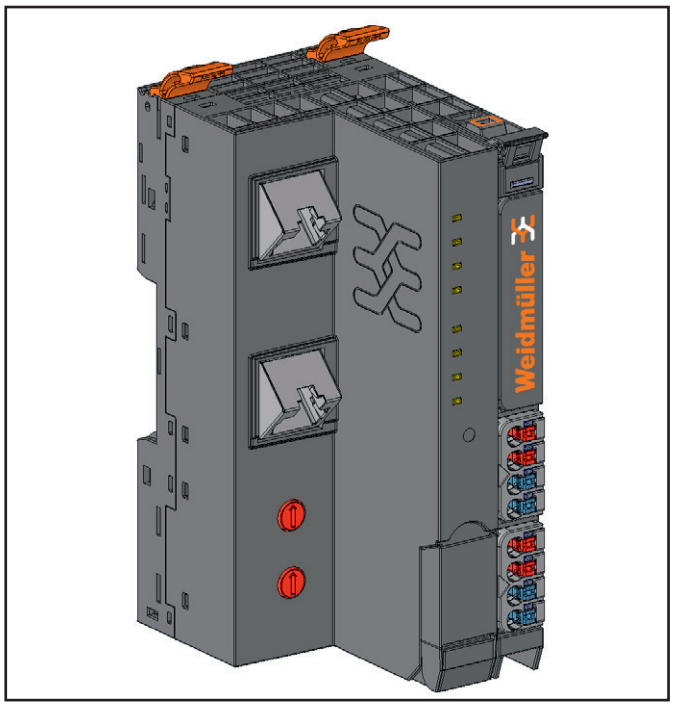

Fieldbus coupler UR20-FBC-PL (Item No. 1334940000)

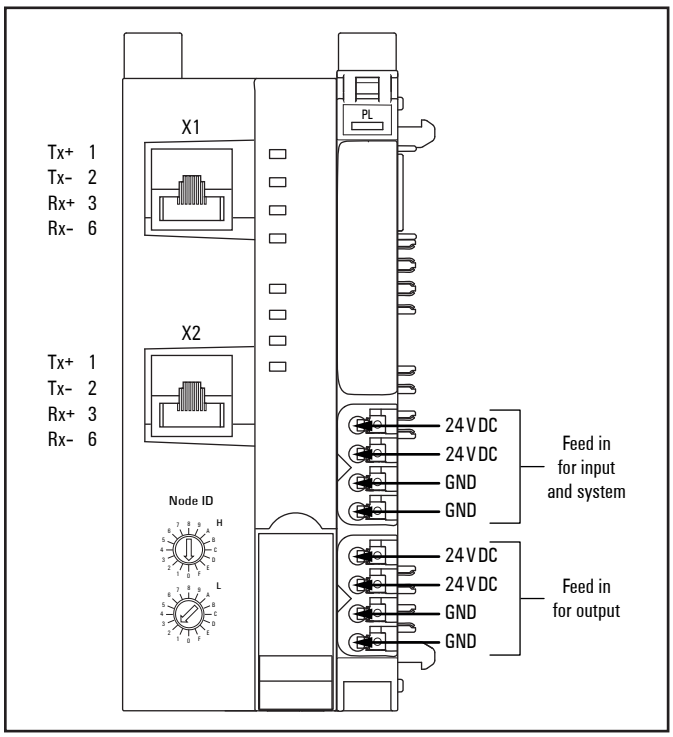

Connection diagram UR20-FBC-PL

ATTENTION

Risk of material damage!
In the case of a maximum power supply of >8 A and a maximum temperature of >+55 °C, all four contacts must be connected with 1.5 mm² wiring!

In combination with a UR20-FBC-PL fieldbus coupler, the UR20-1COM-SAI-PRO must not be configured as the first IO module.

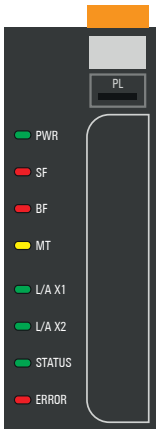			Coupler power supply LED Green: supply voltage > 18 V Red: at least one current path < 18 V
	PWR	Power-LED	**Green**: Supply voltage connected **Red:** Coupler not yet started completely or hardware error
	SF	Collective error	**Red**: Configuration error, or error in the coupler, or error in a module, or there is a new diagnostic report **Red flashing**: Station in Force mode
	BF	Bus failure	**Red**: No connection to the fieldbus **Red flashing**: Configuration error, no connection to the control unit, or error in the parameter set or slave address error or firmware update is running
	MT	Maintenance	**Yellow**: Error on the system bus or fieldbus
	L/A X1	Connection/Activity	**Green**: Ethernet link established on port X1 **Green flickering**: Data received or transmitted on port X1
	L/A X2	Connection/Activity	**Green**: Ethernet link established on port X2 **Green flickering**: Data received or transmitted on port X2
	STATUS	Status	**Green**: OPERATIONAL mode **Off**: No power supply or mode is NOT_ACTIVE If no POWERLINK communication is detected during 5 seconds, the bus controller goes into the BASIC_ETHERNET mode. If POWERLINK communication is detected before this time passes, the bus controller goes into the PRE_OPERATIONAL_1 mode. **Green flickering**: BASIC_ETHERNET mode The bus controller did not detect any POWERLINK communication. In this mode, direct communication with the bus controller is possible using Ethernt frames (eg. TCP/IP or UDP/IP) If POWERLINK communication is detected while in this mode, the bus controller goes into the PRE_OPERATIONAL_1 mode. **Green flashing**: STOPPED mode No output data sent nor input data received. Only the appropriate command from the MN (Managing Node) can enter or leave this mode **Green single flash**: PRE_OPERATIONAL_1 mode. With operation on an POWERLINK V2 MN, the CN (Controlled Node) waits for the reception of a SoC frame and then switches over to PRE_OPERATIONAL_2 mode. **Green double flash**: PRE_OPERATIONAL_2 mode. In this mode the bus controller is normally configured by the MN. A command then switches the mode to READY_TO_OPERATE. **Green triple flash**: READY_TO_OPERATE mode. The MN then switches via command to OPERATIONAL mode.
	ERROR	Error	**Red**: The bus controller has encountered an error (failed Ethernet frames, increased number of collisions on the network, etc.).
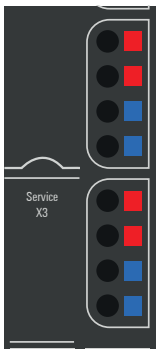		3.1	**Green**: Input path supply voltage > 18 V DC
		3.2	**Red**: Input path supply voltage < 18 V DC
		3.4	**Red**: Internal fuse defective
		4.1	**Green**: Input path supply voltage > 18 V DC
		4.2	**Red**: Input path supply voltage < 18 V DC
		4.4	**Red**: Internal fuse defective

LED indicators UR20-FBC-PL, troubleshooting see Chapter 12

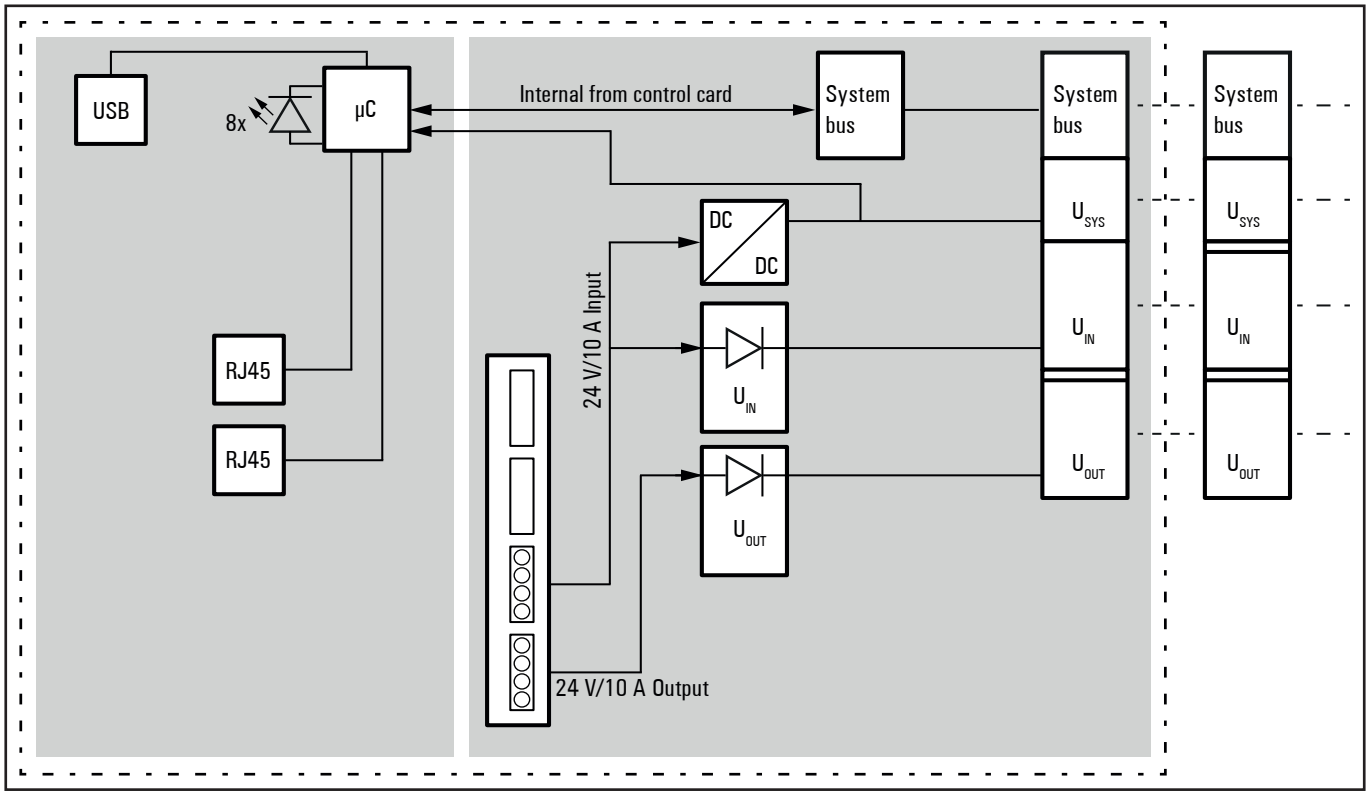

Block diagram UR20-FBC-PL

Automation Studio version 4.2.5.388 or higher is required to integrate the UR20-FBC-PL into the control system.

Addressing

The fieldbus coupler is addressed via the two rotary switches.

A maximum of 239 addresses (1 to 239) can be assigned. Each address may be assigned only **once** in the overall bus structure.
Addresses 0 as well as 240 and higher may not be used!

The high order digit is set with rotary switch **H**, the least significant digit with rotary switch **L** . The switches are labelled in the hexadecimal numbering system (0 to 9, A=10, B=11, C=12, ... F = 15). A decimal to hexadecimal conversion table is provided in the annex.

Coding: Address = (H*16) + L

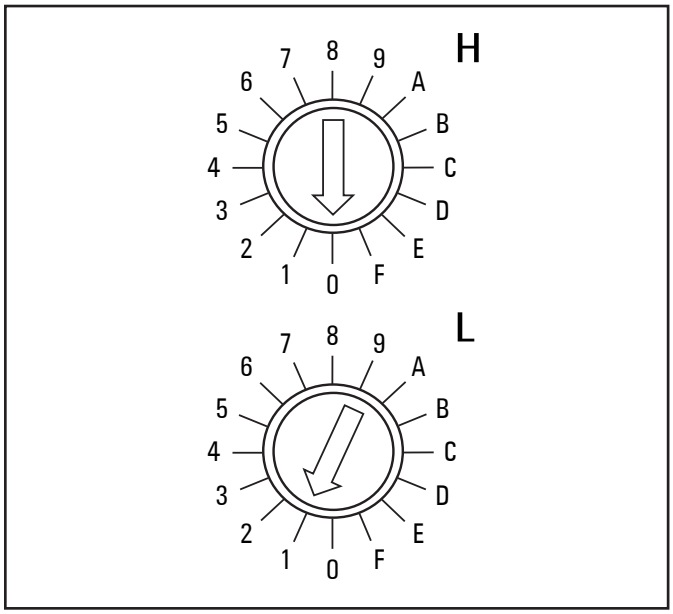

Default setting UR20-FBC-PL: Address = 1

Technical data UR20-FBC-PL (Item No. 1334940000)

System data		
Connection	2 x RJ-45	
Fieldbus protocol	POWERLINK V2	
Input data width	max. 1490 Byte	
Output data width	max. 1490 Byte	
Parameter data	max. 64*64 Byte	
Diagnostic data	max. 64*47 Byte	
Number of modules	max. 64 active	
Configuration interface	Micro USB 2.0	
Fieldbus interface	Half Duplex, Auto MDI/X, Autonegotiation	
Transfer rate	Fieldbus	max. 100 MBit/s
	u-remote system bus	max. 48 MBit/s
Fieldbus		
Device type	Controlled Node (CN)	
Communication profile	DS-301 version DS1.2.0	
Device profile	DS-401	
Number of PDOs	1 TxPDO / 4 RxPDOs	
Min. cycle time	200 µs	
Supported features	Standard Node, Multiplexed Node, PollResponse Chaining Node, SDO/ASND, SDO/UDP, Dynamic Mapping, Multiple Asnd, Store/Restore, Nettime, Webserver via POWERLINK, Firmware Update via POWERLINK	
Supply		
Supply voltage for system and inputs	24 V DC +20% / -15%	
Supply voltage for outputs	24 V DC +20% / -15%	
Feed-in current[1] for input modules	max. 10 A	
Feed-in current[1] for output modules	max. 10 A	
Current consumption from system current path I_{sys}	100 mA	
Temperature data[1]		
Operation	Horizontal installation	-20 °C to +60 °C / -4 °F ... +140 °F (2 x 10 A power supply)
	Vertical installation	-20 °C to +55 °C / -4 °F ... +131 °F (2 x 8 A power supply)
Storage, transport		-40 °C to +85 °C / -40 °F ... +185 °F
Connection data		
Type of connection	„PUSH IN“	
Line connection cross-section	Single-wired, fine-wired	0.14 ... 1.5 mm² (AWG 26 ... 16)
Weight		
Weight (operational status)	224 g	
General data see Section 3.2		

1) Restrictions for the use in potentially explosive atmosphere: Only horizontal installation and max. 8 A power supply!

Overview of the editable parameters UR20-FBC-PL

Parameter	Optional values	Default
IP address	192.168.100.1 Only the last Byte is editable. It conforms to the Node ID and is adjusted with the rotary switches.	192.168.100.1
Subnet mask	255.255.255.0, not editable	255.255.255.0
Gateway	192.168.100.254 Only the last Byte is editable.	192.168.100.254
IP address USB port[1)]	192.168.1.202, 192.168.2.202, 192.168.3.202 ... 192.168.20.202	192.168.1.202
Webserver via Ethernet[1)]	disabled / enabled	enabled
Output behaviour on fieldbus error	All outputs off / Enable substitute values / Hold last value	All outputs off
Module behaviour on hot swap	Continue data exchange / Behaviour like on fieldbus error	Continue data exchange
Data format	Motorola / Intel	Intel
Lock force mode	Force mode unlocked / Force mode locked	Force mode unlocked
HTTPS setting[2)]	HTTP & HTTPS concurrent operation / only HTTPS; no HTTP	HTTP & HTTPS concurrent operation

1) Change requires restart of the coupler. 2) From firmware 01.03.00 upwards.

Coupler status bits UR20-FBC-PL

Bit	Name	Meaning
0	Summarized module diagnosis	Module diagnostic is present. A diagnosis is available for at least one module with diagnostics functionality.
1	Pending	More than one electronic unit or module has been removed from the station.
2	Errorbit 2	Reserve bit 2, currently not used
3	Systembus error	Error on the system bus. Communication with the connected modules is disrupted.
4	Errorbit 4	Reserve bit 4, currently not used
5	Errorbit 5	Reserve bit 5, currently not used
6	I/O-Configuration error	Deviation in the configuration. The module list has changed. The list of configured modules differs from the module list detected by the coupler.
7	Master configuration error	Master configuration error. The list of configured modules differs significantly from the module list detected by the coupler. No process data can be exchanged with the modules. The station switches into PRE-OPERATIONAL state.
8	Errorbit 8	Reserve bit 8, currently not used
9	Errorbit 9	Reserve bit 9, currently not used
10	Force mode active	Force mode was activated through the web server. Process data cannot be exchanged between the PL control and forced channels.
11	Errorbit 11	Reserve bit 11, currently not used
12	Errorbit 12	Reserve bit 12, currently not used
13	Voltage U_{OUT} error	Error in the supply voltage of outputs
14	Voltage U_{IN} error	Error in the supply voltage of system and inputs
15	IO-Link diagnosis	A diagnosis is present on an IO-Link device.

Option handling

Option handling is available for fieldbus couplers with firmware version >01.12.00. The function makes it easier to configure a number of applications with similar or identical configurations. The full configuration of all applications is configured and I/O modules that are not required in a specific application are configured as optional.

- ► Create a current coupler XDD file.
- ► In **Automation Studio**, navigate to **Tools/Manage 3rd-Party Devices/Import Fieldbus Device(s)** to import the modified coupler XDD file into the procect.
- ► Select **00000230_UR20_FBC_PL.xdd**.
- ► Restart **Automation Studio**.

- ► In the device specific parameters, open the **OptionHandlingEnable_I2001_S05** parameter and set the value to 1, in order to activate Option handling.
- ► Write the project to the PLC.

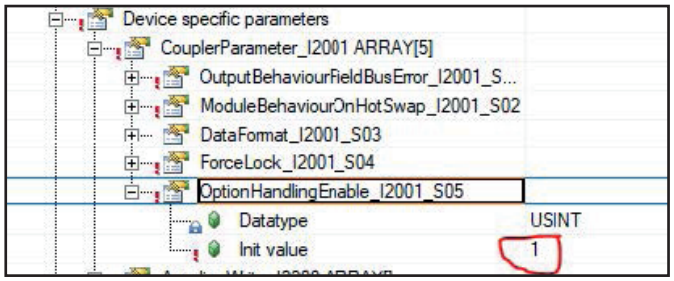

- ► In order to switch on Option handling, write a list with optional modules via SDO Write order into object **0x200A**.
- ► Write via SDO Write the value for transfering the data set into object **0x200B**.

Index	Subindex	Value
0x200A	0x01 – 0x40	Optional module (0x00 – no, 0x01 – yes)
0x200B	0x01	0x21

The coupler restarts, as soon as the data set has been transferred successfully.

- ► In order to switch off Option handling, write the value for deleting the data set into object **0x200B**.

Index	Subindex	Value
0x200B	0x01	0x22

The status object **0x200C** provides the Option handling status information in subindex **0x01**.

Value	Meaning
0x80	Error: Option handling is not permitted
0x81	Error during data set transfer
0x82	Data set OK
0x83	No data set
0x84	New data set is identical with old data set

Example

Configured in Automation Studio as full configuration:
1. UR20-4COM-IO-LINK
2. UR20-4DI-P
3. UR20-4DO-P

In the real station, the IO-Link module is not neccessary and shall be faded out by Option handling.

Procede as follows:
- ► Activate Option handling as described above.
- ► Write the list that shows the IO-LInk module being optional into object **0x200A**.

Module	Subindex Object 200A	Optional (0x00 – no, 0x01 – yes)
UR20-4COM-IO-LINK	0x01	0x01
UR20-4DI-P	0x02	0x00
UR20-4DO-P	0x03	0x00

- ► Write via SDO Write the code for transfering the data set into object **0x200B**.

Index	Subindex	Value
0x200B	0x01	0x21

Each time, there is a new data set, the coupler will restart and thereby Option handling is activiated.

All objects are accessible per SDO.

The following objects are accessible alternatively per PDO (see also coupler XDD):

- 2003 Coupler Status Word
- 2009 Module Status
- 40xx Module process data Input byte xx
- 41xx Module process data Input word xx
- 42xx Module process data Input dword xx
- 43xx Module process data Output byte xx
- 44xx Module process data Output word xx
- 45xx Module process data Output dword xx
- 4600 ModuleInputImages
- 4700 ModulkeOutputImages
- 5002 DiagAlarmInfo
- 5003 ProcessAlarmInfo
- All 6000 Objects

POWERLINK object dictionary

Index	Subindex	Name	Data type	Access type	Default	Description	Store/ Restore
0x1000		NMT_DeviceType_U32	UNSIGNED32	CONST		Deviceprofile DS401	
0x1001		ERR_ErrorRegister_U8	UNSIGNED8	RO			
0x1003		ERR_History_ADOM					
	0x00	NumberOfEntries	UNSIGNED8	RW			
	0x01 ... 0xFE	ErrorEntry_DOM	DOMAIN	RO			
0x1006		NMT_CycleLen_U32	UNSIGNED32	RW			X
0x1008		NMT_ManufactDevName_VS	VISIBLE STRING	CONST	"UR20-FBC-PL"		
0x1009		NMT_ManufactHwVers_VS	VISIBLE STRING	CONST	"xx.xx.xx"		
0x100A		NMT_ManufactSwVers_VS	VISIBLE STRING	CONST	"xx.xx.xx"		
0x1010		NMT_StoreParam_REC	RECORD				
	0x00	NumberOfEntries	UNSIGNED8	CONST	4		
	0x01	AllParam_U32	UNSIGNED32	RW			
	0x02	CommunicationParam_U32	UNSIGNED32	RW			
	0x03	ApplicationParam_U32	UNSIGNED32	RW			
	0x04	ManufacturerParam_U32	UNSIGNED32	RW			
0x1011		NMT_RestoreDefParam_REC	RECORD				
	0x00	NumberOfEntries	UNSIGNED8	CONST	4		
	0x01	AllParam_U32	UNSIGNED32	RW			
	0x02	CommunicationParam_U32	UNSIGNED32	RW			
	0x03	ApplicationParam_U32	UNSIGNED32	RW			
	0x04	ManufacturerParam_U32	UNSIGNED32	RW			
0x1018		NMT_IdentityObject_REC	RECORD				
	0x00	NumberOfEntries	UNSIGNED8	CONST	4		
	0x01	VendorId_U32	UNSIGNED32	CONST	0x00000230		
	0x02	ProductCode_U32	UNSIGNED32	CONST			
	0x03	RevisionNo_U32	UNSIGNED32	CONST			
	0x04	SerialNo_U32	UNSIGNED32	CONST			

POWERLINK object dictionary

Index	Subindex	Name	Data type	Access type	Default	Description	Store/ Restore
0x1020		CFM_VerifyConfiguration_REC	RECORD				X
	0x00	NumberOfEntries	UNSIGNED8	CONST	2		
	0x01	ConfDate_U32	UNSIGNED32	RW	0		X
	0x02	ConfTime_U32	UNSIGNED32	RW	0		X
0x1030		NMT_InterfaceGroup_0h_REC	RECORD				
	0x00	NumberOfEntries	UNSIGNED8	CONST	9		
	0x01	InterfaceIndex_U16	UNSIGNED16	RO			
	0x02	InterfaceDescription_VSTR	VISIBLE STRING	CONST	"Interface 1"		
	0x03	InterfaceType_U8	UNSIGNED8	CONST	6	6. Ethernet CSMA/CD	
	0x04	InterfaceMtu_U16	UNSIGNED16	CONST	1500		
	0x05	InterfacePhysAddress_OSTR	OCTET STRING	CONST		MAC-Address: "xx:xx:xx:xx:xx:xx"	
	0x06	InterfaceName_VSTR	VISIBLE STRING	RO	"Interface 1"		
	0x07	InterfaceOperStatus_U8	UNSIGNED8	RO		0 = down, 1 = up	
	0x08	InterfaceAdminState_U8	UNSIGNED8	RW		0 = down, 1 = up	
	0x09	Valid_BOOL	BOOLEAN	RW	True		
0x1050		NMT_RelativeLatencyDiff_AU32	ARRAY UNSIGNED32				
	0x00	NumberOfEntries	UNSIGNED8	RO	254		
	0x01 ... 0xFE	RelativeLatencyDiff	UNSIGNED32	RO	0		
0x1300		SDO_SequLayerTimeout_U32	UNSIGNED32	RW	15000		X
0x1400 ... 0x1403		PDO_RxCommParam_xxh_REC					
	0x00	NumberOfEntries	UNSIGNED8	CONST	2		
	0x01	NodeID_U8	UNSIGNED8	RW	0		X
	0x02	MappingVersion_U8	UNSIGNED8	RW	0		X
0x1600		PDO_RxMappParam_00h_AU64					
	0x00	NumberOfEntries	UNSIGNED8	RW	20	Standard Rx Mapping (DS401)	X
	0x01	ObjectMapping	UNSIGNED64	RW	0008000000016200	Offset 0x0000: 8 bit → 0x6200 / 0x01	X
	0x02	ObjectMapping	UNSIGNED64	RW	0008000800026200	Offset 0x0008: 8 bit → 0x6200 / 0x02	X
	0x03	ObjectMapping	UNSIGNED64	RW	0008001000036200	Offset 0x0010: 8 bit → 0x6200 / 0x03	X
	0x04	ObjectMapping	UNSIGNED64	RW	0008001800046200	Offset 0x0018: 8 bit → 0x6200 / 0x04	X
	0x05	ObjectMapping	UNSIGNED64	RW	0008002000056200	Offset 0x0020: 8 bit → 0x6200 / 0x05	X
	0x06	ObjectMapping	UNSIGNED64	RW	0008002800066200	Offset 0x0028: 8 bit → 0x6200 / 0x06	X
	0x07	ObjectMapping	UNSIGNED64	RW	0008003000076200	Offset 0x0030: 8 bit → 0x6200 / 0x07	X
	0x08	ObjectMapping	UNSIGNED64	RW	0008003800086200	Offset 0x0038: 8 bit → 0x6200 / 0x08	X

POWERLINK object dictionary

Index	Subindex	Name	Data type	Access type	Default	Description	Store/ Restore
	0x09	ObjectMapping	UNSIGNED64	RW	0010004000016411	Offset 0x0040: 16 bit → 0x6411 / 0x01	X
	0x0A	ObjectMapping	UNSIGNED64	RW	0010005000026411	Offset 0x0050: 16 bit → 0x6411 / 0x02	X
	0x0B	ObjectMapping	UNSIGNED64	RW	0010006000036411	Offset 0x0060: 16 bit → 0x6411 / 0x03	X
	0x0C	ObjectMapping	UNSIGNED64	RW	0010007000046411	Offset 0x0070: 16 bit → 0x6411 / 0x04	X
	0x0D	ObjectMapping	UNSIGNED64	RW	0010008000056411	Offset 0x0080: 16 bit → 0x6411 / 0x05	X
	0x0E	ObjectMapping	UNSIGNED64	RW	0010009000066411	Offset 0x0090: 16 bit → 0x6411 / 0x06	X
	0x0F	ObjectMapping	UNSIGNED64	RW	001000A000076411	Offset 0x00A0: 16 bit → 0x6411 / 0x07	X
	0x10	ObjectMapping	UNSIGNED64	RW	001000B000086411	Offset 0x00B0: 16 bit → 0x6411 / 0x08	X
	0x11	ObjectMapping	UNSIGNED64	RW	001000C000096411	Offset 0x00C0: 16 bit → 0x6411 / 0x09	X
	0x12	ObjectMapping	UNSIGNED64	RW	001000D0000A6411	Offset 0x00D0: 16 bit → 0x6411 / 0x0A	X
	0x13	ObjectMapping	UNSIGNED64	RW	001000E0000B6411	Offset 0x00E0: 16 bit → 0x6411 / 0x0B	X
	0x14	ObjectMapping	UNSIGNED64	RW	001000F0000C6411	Offset 0x00F0: 16 bit → 0x6411 / 0x0C	X
	0x15 ... 0xFE	ObjectMapping	UNSIGNED64	RW	0	No mapping defined	X
0x1601 ... 0x1603		PDO_RxMappParam_xxh_AU64					
	0x00	NumberOfEntries	UNSIGNED8	RW	0		X
	0x01 ... 0xFE	ObjectMapping	UNSIGNED64	RW	0		X
0x1800		PDO_TxCommParam_00h_REC					
	0x00	NumberOfEntries	UNSIGNED8	CONST	2		
	0x01	NodeID_U8	UNSIGNED8	RW	0		X
	0x02	MappingVersion_U8	UNSIGNED8	RW	0		X
0x1A00		PDO_TxMappParam_00h_Au64					
	0x00	NumberOfEntries	UNSIGNED8	RW	20	Standard Tx Mapping (DS401)	X
	0x01	ObjectMapping	UNSIGNED64	RW	0008000000016000	0x6000 / 0x01: 8 bit → Offset 0x0000	X
	0x02	ObjectMapping	UNSIGNED64	RW	0008000800026000	0x6000 / 0x02: 8 bit → Offset 0x0008	X
	0x03	ObjectMapping	UNSIGNED64	RW	0008001000036000	0x6000 / 0x03: 8 bit → Offset 0x0010	X
	0x04	ObjectMapping	UNSIGNED64	RW	0008001800046000	0x6000 / 0x04: 8 bit → Offset 0x0018	X
	0x05	ObjectMapping	UNSIGNED64	RW	0008002000056000	0x6000 / 0x05: 8 bit → Offset 0x0020	X
	0x06	ObjectMapping	UNSIGNED64	RW	0008002800066000	0x6000 / 0x06: 8 bit → Offset 0x0028	X

POWERLINK object dictionary

Index	Subindex	Name	Data type	Access type	Default	Description	Store/ Restore
	0x07	ObjectMapping	UNSIGNED64	RW	0008003000076000	0x6000 / 0x07: 8 bit → Offset 0x0030	X
	0x08	ObjectMapping	UNSIGNED64	RW	0008003800086000	0x6000 / 0x08: 8 bit → Offset 0x0038	X
	0x09	ObjectMapping	UNSIGNED64	RW	0010004000016401	0x6401 / 0x01: 16 bit → Offset 0x0040	X
	0x0A	ObjectMapping	UNSIGNED64	RW	0010005000026401	0x6401 / 0x02: 16 bit → Offset 0x0050	X
	0x0B	ObjectMapping	UNSIGNED64	RW	0010006000036401	0x6401 / 0x03: 16 bit → Offset 0x0060	X
	0x0C	ObjectMapping	UNSIGNED64	RW	0010007000046401	0x6401 / 0x04: 16 bit → Offset 0x0070	X
	0x0D	ObjectMapping	UNSIGNED64	RW	0010008000056401	0x6401 / 0x05: 16 bit → Offset 0x0080	X
	0x0E	ObjectMapping	UNSIGNED64	RW	0010009000066401	0x6401 / 0x06: 16 bit → Offset 0x0090	X
	0x0F	ObjectMapping	UNSIGNED64	RW	001000A000076401	0x6401 / 0x07: 16 bit → Offset 0x00A0	X
	0x10	ObjectMapping	UNSIGNED64	RW	001000B000086401	0x6401 / 0x08: 16 bit → Offset 0x00B0	X
	0x11	ObjectMapping	UNSIGNED64	RW	001000C000096401	0x6401 / 0x09: 16 bit → Offset 0x00C0	X
	0x12	ObjectMapping	UNSIGNED64	RW	001000D0000A6401	0x6401 / 0x0A: 16 bit → Offset 0x00D0	X
	0x13	ObjectMapping	UNSIGNED64	RW	001000E0000B6401	0x6401 / 0x0B: 16 bit → Offset 0x00E0	X
	0x14	ObjectMapping	UNSIGNED64	RW	001000F0000C6401	0x6401 / 0x0C: 16 bit → Offset 0x00F0	X
	0x15 ... 0xFE	ObjectMapping	UNSIGNED64	RW	0	no mapping defined	X
0x1C0B		DLL_CNLossSoC_REC					
	0x00	NumberOfEntries	UNSIGNED8	CONST	3		
	0x01	CumulativeCnt_U32	UNSIGNED32	RW	0		
	0x02	ThresholdCnt_U32	UNSIGNED32	RO	0		
	0x03	Threshold_U32	UNSIGNED32	RW	15		X
0x1C0D		DLL_CNLossPReq_REC					
	0x00	NumberOfEntries	UNSIGNED8	CONST	3		
	0x01	CumulativeCnt_U32	UNSIGNED32	RW	0		
	0x02	ThresholdCnt_U32	UNSIGNED32	RO	0		
	0x03	Threshold_U32	UNSIGNED32	RW	15		X
0x1C0F		DLL_CNCRCError_REC					
	0x00	NumberOfEntries	UNSIGNED8	CONST	3		
	0x01	CumulativeCnt_U32	UNSIGNED32	RW	0		
	0x02	ThresholdCnt_U32	UNSIGNED32	RO	0		
	0x03	Threshold_U32	UNSIGNED32	RW	15		X
0x1C14		DLL_LossOfSoCTolarance_U32	UNSIGNED32	RW	100000		X

POWERLINK object dictionary

Index	Subindex	Name	Data type	Access type	Default	Description	Store/ Restore
0x1E40		NWL_IpAddrTable_0h_REC	RECORD				
	0x00	NumberOfEntries	UNSIGNED8	CONST	5		
	0x01	IfIndex_U16	UNSIGNED16	RO	1		
	0x02	Addr_IPAD	UNSIGNED32	RO	192.168.100.x	x = Node-ID	
	0x03	NetMask_IPAD	UNSIGNED32	RO	255.255.255.0		
	0x04	ReasmMaxSize_U16	UNSIGNED16	RO	5000	not supported	
	0x05	DefaultGateway_IPAD	UNSIGNED32	RW	192.168.100.254		X
0x1E4A		NWL_IpGroup_REC	RECORD				
	0x00	NumberOfEntries	UNSIGNED8	CONST	3		
	0x01	Forwarding_BOOL	BOOLEAN	RW	False	not supported	X
	0x02	DefaultTTL_U16	UNSIGNED16	RW	64	not supported	X
	0x03	ForwardDatagrams_U32	UNSIGNED32	RO	0		
0x1F50		PDL_DownloadProgData_ADOM	ARRAY DOMAIN				
	0x00	NumberOfEntries	UNSIGNED8	CONST	1		
	0x01	Program	DOMAIN	WO		Firmware bus coupler	
0x1F51		PDL_ProgCtrl_AU8	ARRAY UNSIGNED8				
	0x00	NumberOfEntries	UNSIGNED8	CONT	1		
	0x01	ProgCtrl	UNSIGNED8	RW	1	Only value "1" allowed	
0x1F52		PDL_LocVerApplSw_REC	RECORD				
	0x00	NumberOfEntries	UNSIGNED8	CONST	2		
	0x01	ApplSwDate_U32	UNSIGNED32	RW	0		
	0x02	ApplSwTime_U32	UNSIGNED32	RW	0		
0x1F81		NMT_NodeAssignment_AU32	ARRAY UNSIGNED32				X
	0x00	NumberOfEntries	UNSIGNED8	RW	254		X
	0x01 ... 0xFE	NodeAssignment	UNSIGNED32	RW	0		X
0x1F82		NMT_FeatureFlags_U32	UNSIGNED32	CONST	0x50267		
0x1F83		NMT_EPLVersion_U8	UNSIGNED8	CONST	0x20		
0x1F8C		NMT_CurrNMTState_U8	UNSIGNED8	RO			
0x1F8D		NMT_PResPayloadLimitList_AU16	ARRAY UNSIGNED16				X
	0x00	NumberOfEntries	UNSIGNED8	CONST	254		X
	0x01 ... 0xFE	PResPayloadLimit	UNSIGNED16	RW	0		X
0x1F93		NMT_EPLNodeID_REC	RECORD				
	0x00	NumberOfEntries	UNSIGNED8	CONST	2		
	0x01	NodeID_U8	UNSIGNED8	RO		1 ... 239	
	0x02	NodeIDByHW_BOOL	BOOLEAN	RO	TRUE		
0x1F98		NMT_CycleTiming_REC	RECORD				
	0x00	NumberOfEntries	UNSIGNED8	CONST	14		
	0x01	IsochrTxMaxPayload_U16	UNSIGNED16	RO	1490		
	0x02	IsochrRxMaxPayload_U16	UNSIGNED16	RO	1490		
	0x03	PResMaxLatency_U32	UNSIGNED32	CONST	2000		

POWERLINK object dictionary

Index	Subindex	Name	Data type	Access type	Default	Description	Store/ Restore
	0x04	PReqActPayload_U16	UNSIGNED16	RW	256		X
	0x05	PResActPayload_U16	UNSIGNED16	RW	256		X
	0x06	ASndMaxLatency_U32	UNSIGNED32	CONST	2000		
	0x07	MultipleCycleCnt_U8	UNSIGNED8	RW	0		X
	0x08	AsyncMTUSize_U16	UNSIGNED16	RW	300		X
	0x09	Prescaler_U16	UNSIGNED16	RW	2		X
	0x0A	PResMode_U8	UNSIGNED8	RO	0		
	0x0B	PResTimeFirst_U32	UNSIGNED32	RO	0		
	0x0C	PResTimeSecond_U32	UNSIGNED32	RO	0		
	0x0D	SyncMNDelayFirst_U32	UNSIGNED32	RO	0		
	0x0E	SyncDelaySecond_U32	UNSIGNED32	RO	0		
0x1F99		NMT_CNBasicEthernetTimeout_U32	UNSIGNED32	RW	5000000		X
0x1F9A		NMT_HostName_VSTR	VISIBLE STRING	RW			X
0x1F9B		NMT_MultiplCycleAssign_AU8	ARRAY UNSIGNED8				X
	0x00	NumberOfEntries	UNSIGNED8	CONST	254		X
	0x01 ... 0xFE	CycleNo	UNSIGNED8	RW	0		X
0x1F9E		NMT_ResetCmd_U8	UNSIGNED8	RW	0xFF		
0x2000		Coupler Information	ARRAY				
	0x00	NumberOfEntries	UNSIGNED8	RO	3		
	0x01	Hardware Version	VISIBLE_STRING	RO		xx.xx.xx	
	0x02	Software Version	VISIBLE_STRING	RO		xx.xx.xx	
	0x03	Serial Number	VISIBLE_STRING	RO			
0x2001		Couper Parameter	ARRAY				
	0x00	NumberOfEntries	UNSIGNED8	RO	4		
	0x01	Output behaviour field bus error	UNSIGNED8	RW			
	0x02	Module behaviour on hot swap	UNSIGNED8	RW			
	0x03	Data format	UNSIGNED8	RW			
	0x04	Force Lock	UNSIGNED8	RW			
0x2002		Coupler Error Counter	ARRAY				
	0x00	NumberOfEntries	UNSIGNED8	RO	14		
	0x01	Expected Length Error Counter	UNSIGNED16	RO			
	0x02	Time Out Error Counter	UNSIGNED16	RO			
	0x03	Stop Bit Error	UNSIGNED16	RO			
	0x04	FCS Error Counter	UNSIGNED16	RO			
	0x05	Telegram Length Error Counter	UNSIGNED16	RO			
	0x06	Telegram Type Error Counter	UNSIGNED16	RO			
	0x07	Alarm Retry Error Counter	UNSIGNED16	RO			
	0x08	Bus Idle Time Error Counter	UNSIGNED16	RO			
	0x09	Wrong Address Error Counter	UNSIGNED16	RO			
	0x0A	One Tel Retry Counter	UNSIGNED16	RO			

POWERLINK object dictionary

Index	Subindex	Name	Data type	Access type	Default	Description	Store/ Restore
	0x0B	Two Tel Retries Counter	UNSIGNED16	RO			
	0x0C	Three Or More Retries Counter	UNSIGNED16	RO			
	0x0D	Telegram Valid Counter	UNSIGNED16	RO			
	0x0E	Slio Master Load Counter	UNSIGNED16	RO			
0x2003		Coupler Status Word	UNSIGNED16	RO			
0x2004		CPU Temperature	INTEGER8	RO			
0x2005		Module Reference List	ARRAY				X
	0x00	NumberOfEntries	UNSIGNED8	RO	64		
	0x01 ... 0x40	Module ID, see Annex page A-2	UNSIGNED32	RW			X
0x2006		Module List	ARRAY				
	0x00	NumberOfEntries	UNSIGNED8	RO	64		
	0x01 ... 0x40	Module ID, see Annex page A-2	UNSIGNED32	RO			
0x2007		NMT_ChildIdentData					
	0x00	NumberOfEntries	UNSIGNED8	RO	64		
	0x01 ... 0x40	NMT_ChildIdentData_ADOM	DOMAIN	RO			
0x2009		Module status					
	0x00	NumberOfEntries	UNSIGNED8	RO	16		
	0x01 ... 0x10	Module status	UNSIGNED8	RO		2 bits per I/O module 00 = Module OK 01 = Module error 10 = Incorrect module 11 = Module not plugged in	
0x3000		Module Info - Type	ARRAY				
	0x00	NumberOfEntries	UNSIGNED8	RO	64		
	0x01 ... 0x40	Module	VISIBLE_STRING	RO			
0x3001		Module Info - Name	ARRAY				
	0x00	NumberOfEntries	UNSIGNED8	RO	64		
	0x01 ... 0x40	Module	VISIBLE_STRING	RO			
0x3002		Module Info - Order Number	ARRAY				
	0x00	NumberOfEntries	UNSIGNED8	RO	64		
	0x01 ... 0x40	Module	VISIBLE_STRING	RO			
0x3003		Module Info - Serial Number	ARRAY				
	0x00	NumberOfEntries	UNSIGNED8	RO	64		
	0x01 ... 0x40	Module	VISIBLE_STRING	RO			
0x3004		Module Info - ID	ARRAY				
	0x00	NumberOfEntries	UNSIGNED8	RO	64		
	0x01 ... 0x40	Module	VISIBLE_STRING	RO			
0x3005		Module Info - Hardware Version	ARRAY				
	0x00	NumberOfEntries	UNSIGNED8	RO	64		
	0x01 ... 0x40	Module	VISIBLE_STRING	RO			

POWERLINK object dictionary

Index	Subindex	Name	Data type	Access type	Default	Description	Store/ Restore
0x3006		Module Info - Software Version	ARRAY				
	0x00	NumberOfEntries	UNSIGNED8	RO	64		
	0x01 ... 0x40	Module	VISIBLE_STRING	RO			
0x3007		Module Info - MX Version	ARRAY				
	0x00	NumberOfEntries	UNSIGNED8	RO	64		
	0x01 ... 0x40	Module	VISIBLE_STRING	RO			
0x31xx		Module Parameter xx					X
xx = 0x00 ... 0x3F	0x00	NumberOfEntries	UNSIGNED8	RO	254		
	0x01 ... 0x40	Module	SIGNED32	RW			X
0x40xx		Module process data input byte xx					
xx = 0x00 ... 0x3F	0x00	NumberOfEntries	UNSIGNED8	RO	64		
	0x01 ... 0x40	Module	UNSIGNED8				
0x41xx		Module process data input word xx					
xx = 0x00 ... 0x1F	0x00	NumberOfEntries	UNSIGNED8	RO	64		
	0x01 ... 0x40	Module	UNSIGNED16				
0x42xx		Module process data input dword xx					
xx = 0x00 ... 0x0F	0x00	NumberOfEntries	UNSIGNED8	RO	64		
	0x01 ... 0x40	Module	UNSIGNED32				
0x43xx		Module process data output byte xx					
xx = 0x00 ... 0x3F	0x00	NumberOfEntries	UNSIGNED8	WO	64		
	0x01 ... 0x40	Module	UNSIGNED8				
0x44xx		Module process data output word xx					
xx = 0x00 ... 0x1F	0x00	NumberOfEntries	UNSIGNED8	WO	64		
	0x01 ... 0x40	Module	UNSIGNED16				
0x45xx		Module process data output dword xx					
xx = 0x00 ... 0x0F	0x00	NumberOfEntries	UNSIGNED8	WO	64		
	0x01 ... 0x40	Module	UNSIGNED32				
0x4600		Module process data InputImages					
	0x00	NumberOfEntries	UNSIGNED8	RO	64		
	0x01 ... 0x40	InputImage	DOMAIN	RO			
0x4700		Module process data OutputImages					
	0x00	NumberOfEntries	UNSIGNED8	RO	64		
	0x01 ... 0x40	OutputImage	DOMAIN	WO			
0x5000		Module diagnostic messages	ARRAY				
	0x00	NumberOfEntries	UNSIGNED8	RO	64		
	0x01 ... 0x40	Module	OCTET STRING	RO			
0x5001		Module process messages	ARRAY				
	0x00	NumberOfEntries	UNSIGNED8	RO	64		
	0x01 ... 0x40	Module	OCTET STRING	RO			

POWERLINK object dictionary

Index	Subindex	Name	Data type	Access type	Default	Description	Store/ Restore
0x5002		Module diagnostic alarm info	ARRAY				
	0x00	NumberOfEntries	UNSIGNED8	RO	8		
	0x01	Module 1-8 diagnostic alarm info	UNSIGNED8	RO			
	0x02	Module 9-16 diagnostic alarm info	UNSIGNED8	RO			
	0x03	Module 17-24 diagnostic alarm info	UNSIGNED8	RO			
	0x04	Module 25-32 diagnostic alarm info	UNSIGNED8	RO			
	0x05	Module 33-40 diagnostic alarm info	UNSIGNED8	RO			
	0x06	Module 41-48 diagnostic alarm info	UNSIGNED8	RO			
	0x07	Module 49-56 diagnostic alarm info	UNSIGNED8	RO			
	0x08	Module 57-64 diagnostic alarm info	UNSIGNED8	RO			
0x5003		Module process alarm info	ARRAY				
	0x00	NumberOfEntries	UNSIGNED8	RO	8		
	0x01	Module 1-8 process alarm info	UNSIGNED8	RO			
	0x02	Module 9-16 process alarm info	UNSIGNED8	RO			
	0x03	Module 17-24 process alarm info	UNSIGNED8	RO			
	0x04	Module 25-32 process alarm info	UNSIGNED8	RO			
	0x05	Module 33-40 process alarm info	UNSIGNED8	RO			
	0x06	Module 41-48 process alarm info	UNSIGNED8	RO			
	0x07	Module 49-56 process alarm info	UNSIGNED8	RO			
	0x08	Module 57-64 process alarm info	UNSIGNED8	RO			
0x6000		DigitalInput8bit					
	0x00	NumberOfEntries	UNSIGNED8	RO	254		
	0x01 ... 0xFE	DigitalInput	UNSIGNED8				
0x6100		DigitalInput16bit					
	0x00	NumberOfEntries	UNSIGNED8	RO	254		
	0x01 ... 0xFE	DigitalInput	UNSIGNED16				
0x6120		DigitalInput32bit					
	0x00	NumberOfEntries	UNSIGNED8	RO	254		
	0x01 ... 0xFE	DigitalInput	UNSIGNED32				
0x6200		DigitalOutput8bit					
	0x00	NumberOfEntries	UNSIGNED8	RO	254		
	0x01 ... 0xFE	DigitalOutput	UNSIGNED8				
0x6300		DigitalOutput16bit					
	0x00	NumberOfEntries	UNSIGNED8	RO	254		
	0x01 ... 0xFE	DigitalOutput	UNSIGNED16				
0x6320		DigitalOutput32bit					
	0x00	NumberOfEntries	UNSIGNED8	RO	254		
	0x01 ... 0xFE	DigitalOutput	UNSIGNED32				
0x6401		AnalogueInput16Bit					
	0x00	NumberOfEntries	UNSIGNED8	RO	254		
	0x01 ... 0xFE	AnalogueInput	SIGNED16				

POWERLINK object dictionary

Index	Subindex	Name	Data type	Access type	Default	Description	Store/ Restore
0x6411		AnalogueOutput16Bit					
	0x00	NumberOfEntries	UNSIGNED8	RO	254		
	0x01 ... 0xFE	AnalogueOutput	SIGNED16				

Coupler-dependent data width of I/O modules UR20-FBC-PL

Item No.	Module	Configuration	Parameters[1)]	Diagnostics	Process data	
					Input	Output
		Bytes	Bytes	Bytes	Bytes	Bytes
1334890000	UR20-FBC-CAN	–		47	–	–
1315170000	UR20-4DI-P	2		47	1	–
2009360000	UR20-4DI-P-3W	2		47	1	–
1315180000	UR20-8DI-P-2W	2		47	1	–
1394400000	UR20-8DI-P-3W	2		47	1	–
1315190000	UR20-8DI-P-3W-HD	2		47	1	–
1315200000	UR20-16DI-P	2		47	2	–
1315210000	UR20-16DI-P-PLC-INT	2		47	2	–
1315350000	UR20-4DI-N	2		47	1	–
1315370000	UR20-8DI-N-3W	2		47	1	–
1315390000	UR20-16DI-N	2		47	2	–
1315400000	UR20-16DI-N-PLC-INT	2		47	2	–
1550070000	UR20-4DI-2W-230V-AC	2		47	1	–
2457240000	UR20-8DI-ISO-2W	2		47	1	–
1315220000	UR20-4DO-P	2		47	–	1
1315230000	UR20-4DO-P-2A	2		47	–	1
1394420000	UR20-4DO-PN-2A	2		47	–	1
1315240000	UR20-8DO-P	2		47	–	1
1509830000	UR20-8DO-P-2W-HD	2		47	–	1
1315250000	UR20-16DO-P	2		47	–	2
1315270000	UR20-16DO-P-PLC-INT	2		47	–	2
1315410000	UR20-4DO-N	2		47	–	1
1315420000	UR20-4DO-N-2A	2		47	–	1
1315430000	UR20-8DO-N	2		47	–	1
1315440000	UR20-16DO-N	2		47	–	2
1315450000	UR20-16DO-N-PLC-INT	2		47	–	2
2457250000	UR20-4DO-ISO-4A	2		47	–	1
2456530000	UR20-8DIO-P-3W-DIAG	2		47	1	1
1315540000	UR20-4RO-SSR-255	2		47	–	1
1315550000	UR20-4RO-CO-255	2		47	–	1
1315600000	UR20-2PWM-PN-0.5A	2		47	4	12
3036960000	UR20-2PWM-PN-0.5A-V2	2		47	4	12

1) Each parameter is transferred individually by a SDO transfer (service data objects). For that reason there is no size limit, nevertheless every transfered parameter prolongs starting up the station.

2) Input process data and output process data must have the same value.

Coupler-dependent data width of I/O modules UR20-FBC-PL

Item No.	Module	Configuration	Parameters[1)]	Diagnostics	Process data	
					Input	Output
		Bytes	Bytes	Bytes	Bytes	Bytes
1315610000	UR20-2PWM-PN-2A	2		47	4	12
3036950000	UR20-2PWM-PN-2A-V2	2		47	4	12
2697910000	UR20-2PWM-I-2.5A-2DI-P	2		47	8	6
2489830000	UR20-1SM-50W-6DI2DO-P	2		47	16	16
2705620000	UR20-2AI-UI-16	2		47	4	–
2566090000	UR20-2AI-UI-16-DIAG	2		47	4	–
1315620000	UR20-4AI-UI-16	2		47	8	–
1315690000	UR20-4AI-UI-16-DIAG	2		47	8	–
1993880000	UR20-4AI-UI-DIF-16-DIAG	2		47	8	–
2544660000	UR20-4AI-UI-DIF-32-DIAG	2		47	16	–
2566960000	UR20-4AI-UI-ISO-16-DIAG	2		47	8	–
1506920000	UR20-4AI-UI-16-HD	2		47	8	–
1506910000	UR20-4AI-UI-16-DIAG-HD	2		47	8	–
1394390000	UR20-4AI-UI-12	2		47	8	–
1529370000	UR20-8AI-I-16-DIAG	2		47	16	–
1315650000	UR20-8AI-I-16-HD	2		47	16	–
1315720000	UR20-8AI-I-16-DIAG-HD	2		47	16	–
1315670000	UR20-8AI-I-PLC-INT	2		47	16	–
1315700000	UR20-4AI-RTD-DIAG	2		47	8	–
2456540000	UR20-4AI-RTD-HP-DIAG	2		47	8	–
1315710000	UR20-4AI-TC-DIAG	2		47	8	–[1]
2001670000	UR20-4AI-R-HS-16-DIAG	2		47	8	–
2555940000	UR20-8AI-RTD-DIAG-2W	2		47	16	–
3039320000	UR20-15AI-U-16-DIAG	2		47	9	1
1990070000	UR20-2AI-SG-24-DIAG	2		47	16	16
2007420000	UR20-3EM-230V-AC	2		47	16	16
2920830000	UR20-3EM-400V-AC-CT1A	2		47	32	8
2920840000	UR20-3EM-400V-AC-CT5A	2		47	32	8
2920850000	UR20-3EM-400V-AC-RC	2		47	32	8
2920860000	UR20-3EM-400V-AC-333mV	2		47	32	8
2705630000	UR20-2AO-UI-16	2		47	–	4
2566100000	UR20-2AO-UI-16-DIAG	2		47	–	4
2566970000	UR20-2AO-UI-ISO-16-DIAG	2		47	–	4
1315680000	UR20-4AO-UI-16	2		47	–	8
2453880000	UR20-4AO-UI-16-M	2		47	–	8
1315730000	UR20-4AO-UI-16-DIAG	2		47	–	8
2453870000	UR20-4AO-UI-16-M-DIAG	2		47	–	8

1) Each parameter is transferred individually by a SDO transfer (service data objects). For that reason there is no size limit, nevertheless every transfered parameter prolongs starting up the station.

2) Input process data and output process data must have the same value.

1

Coupler-dependent data width of I/O modules UR20-FBC-PL

Item No.	Module	Configuration	Parameters[1]	Diagnostics	Process data	
					Input	Output
		Bytes	Bytes	Bytes	Bytes	Bytes
1510690000	UR20-4AO-UI-16-HD	2		47	–	8
1506930000	UR20-4AO-UI-16-DIAG-HD	2		47	–	8
1315570000	UR20-1CNT-100-1DO	2		47	12	10
1315590000	UR20-2CNT-100	2		47	12	12
1315580000	UR20-1CNT-500	2		47	8	10
1508080000	UR20-2FCNT-100	2		47	20	12
1508090000	UR20-1SSI	2		47	6	0
1315750000	UR20-1COM-232-485-422	2		47	16	16
2826800000	UR20-1COM-232-485-422-V2	2		47	19	19
2007430000	UR20-1COM-SAI-PRO	2		47	–	–
3116480000	UR20-1COM-SAI-PRO-V2	2		47	–	–
2489840000	UR20-1COM-CANOPEN	2		47	18, 34, 64[2]	18, 34, 64[2]
3040800000	UR20-1COM-CAN	2		47	3 – 122	3 – 122
1315740000	UR20-4COM-IO-LINK	See manual for UR20-4COM-IO-LINK communication module				
2819690000	UR20-4COM-IO-LINK-V2	See manual for UR20-4COM-IO-LINK communication module				
1335030000	UR20-PF-O-1DI-SIL	2		47	4	–
1335040000	UR20-PF-O-2DI-DELAY-SIL	2		47	4	–
1335050000	UR20-PF-O-2DI-SIL	2		47	4	–
max. data (in Byte)			max. 1500 asynchronous data per telegramm		1490	1490

1) Each parameter is transferred individually by a SDO transfer (service data objects). For that reason there is no size limit, nevertheless every transfered parameter prolongs starting up the station.

2) Input process data and output process data must have the same value.

5.10 Fieldbus coupler IEC 61162-450

The UR20-FBC-IEC61162-450 fieldbus coupler is an Ethernet participant according to IEC 61162-450. As a head module of the u-remote system bus the coupler supports up to 64 active modules (see list of supported modules at the end of the chapter).
The two Ethernet ports form an unmanaged 2-port switch that supports a line network structure. In combination with one or more UR20-1COM-232-485-422 serial communication modules, the coupler can be used as an SNGF device according to IEC 61162-450. The coupler packs IEC 61162-1/NMEA 0183 sentences, which are sent from a connected device via the serial line to a serial communication module, into IEC 61162-450 datagrams and vice versa.
In addition the coupler can map digitial or analogue input values onto IEC 61162-1/NMEA 0183 sentences and distribute them via the ethernet based IEC 61162-450 network. IEC 61162-450 datagrams with IEC 61162-1/NMEA 0183 sentence can also be received and interpreted in such a way that digital and analogue outputs can be switched.
The coupler can be accessed with a system-independent web server application via the USB service interface or the Ethernet. Thus, all information, such as diagnostics, status values and parameters, can be read and all connected modules can be simulated or forced.
The station's main power supply is integrated in the coupler. Power is supplied via two 4-pole connectors, separated into the input and output current paths.

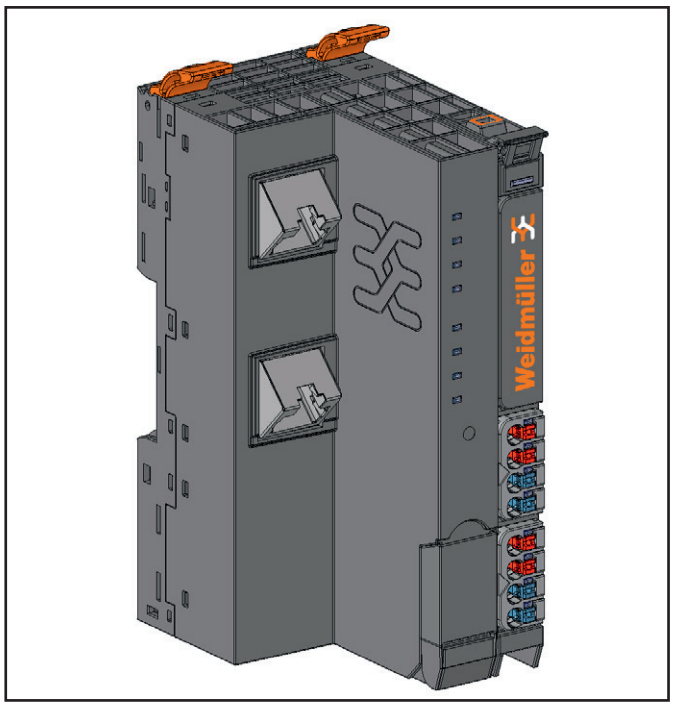

Fieldbus coupler UR20-FBC-IEC61162-450 (Item No. 2661310000),

Status indicators

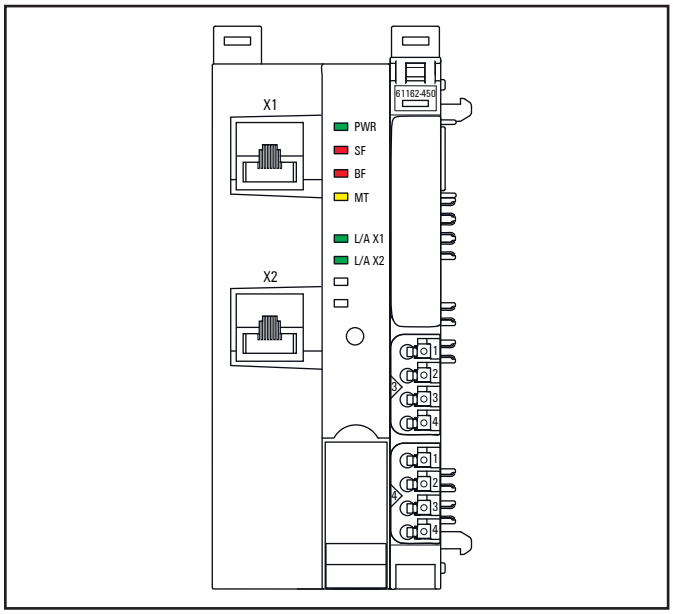

LED status indicators UR20-FBC-IEC61162-450, troubleshooting see Chapter 12

PWR	Power LED	**Green**: Supply voltage connected **Red:** Coupler not yet started completely or hardware error
SF	Collective error	**Red:** Configuration error, or error in the coupler, or error in a module, or there is a new diagnostic message **Red flashing**: Station in Force mode
BF	Bus failure	**Red:** No connection to the fieldbus or coupler parameter "Connected to fieldbus" is set to "Off" **Red flashing**: Configuration error or error in the parameter set, or firmware update is running
MT	Maintenance	**Yellow**: Error on the system bus or fieldbus
L/A X1	Connection/active	**Green / Yellow**[1)]: Connection established between port X1 of the coupler and another field device **Green flashing / Yellow flashing**[1)]: Data being exchanged on port X1
L/A X2	Connection/active	**Green / Yellow**[1)]: Connection established between port X2 of the coupler and another field device **Green flashing / Yellow flashing**[1)]: Data being exchanged on port X2

1) Green: Transfer rate 100 MBit/s, Yellow: Transfer rate 10 MBit/s

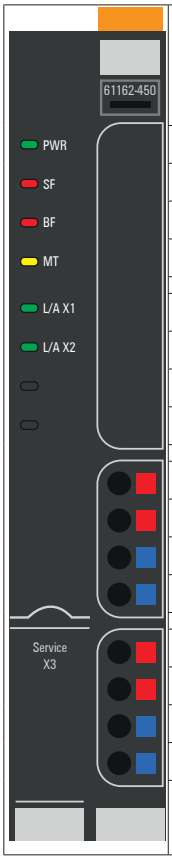

	Coupler power supply LED green: supply voltage >18 V red: at least one current path <18 V
3.1	Green: Input current path supply voltage > 18 V DC
3.2	Red: Input current path supply voltage < 18 V DC
3.4	Red: Internal fuse defective
4.1	Green: Output current path supply voltage > 18 V DC
4.2	Red: Output current path supply voltage < 18 V DC
4.4	Red: Internal fuse defective

LED indicators UR20-FBC-IEC61162-450, troubleshooting see Chapter 12

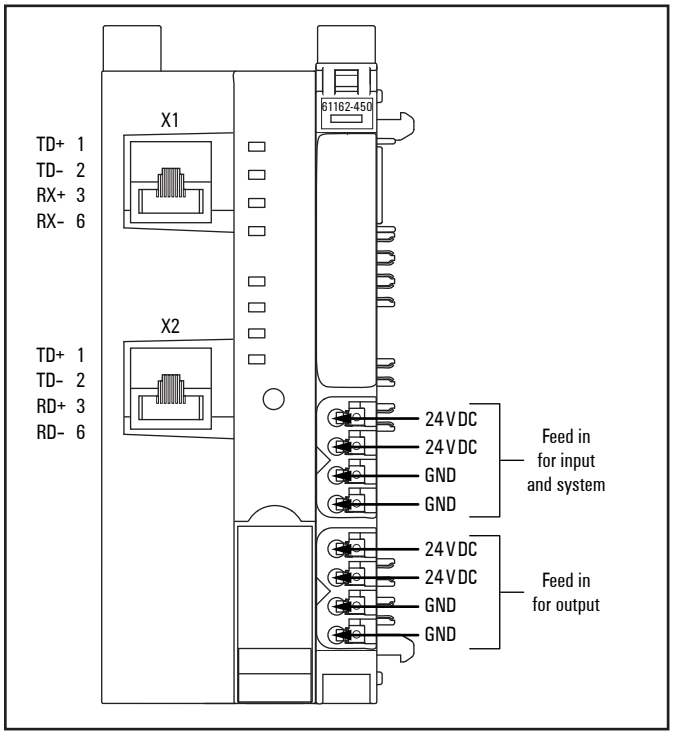

Connection diagram UR20-FBC-IEC61162-450

ATTENTION

Risk of material damage!

In the case of a maximum power supply of >8 A and a maximum temperature of >+55 °C, all four contacts must be connected with 1.5 mm² wiring!

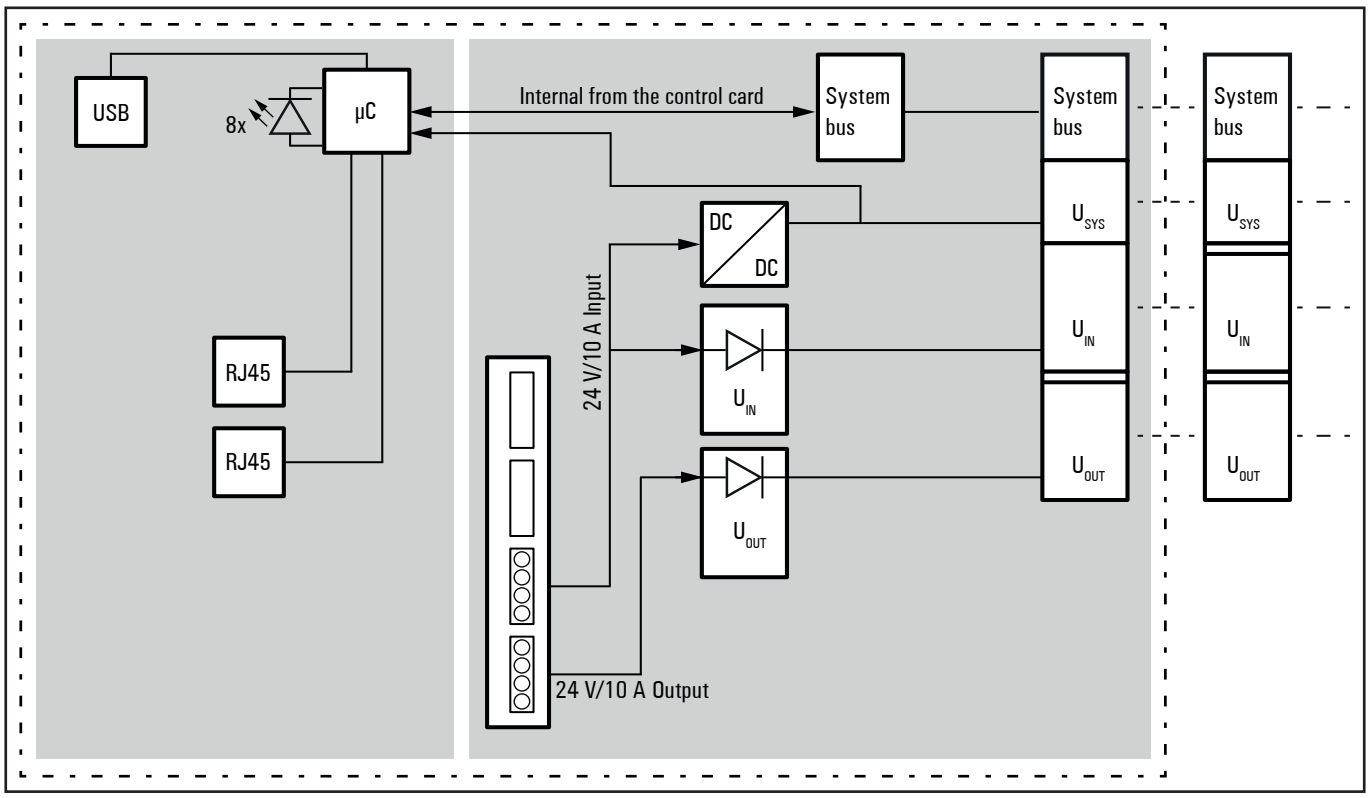

Block diagram UR20-FBC-IEC61162-450

Technical data UR20-FBC-IEC61162-450 (Item No. 2661310000)

System data		
Connection	2 x RJ-45	
Fieldbus protocol	IEC 61162-450	
Number of modules	max. 64 active	
Configuration interface	Micro USB 2.0	
Transfer rate	Fieldbus	10 Mbps/100 Mbps
	u-remote system bus	max. 48 Mbps
Supply		
Supply voltage for system and inputs	24 V DC +20 % / -15 %	
Supply voltage for outputs	24 V DC +20 % / -15 %	
Feed-in current[1] for input modules	max. 10 A	
Feed-in current[1] for output modules	max. 10 A	
Current consumption from system current path I_{SYS}	112 mA	
Temperature data[1]		
Operation	horizontal installation	-20 °C to +60 °C / -4 °F ... +140 °F (2 x 10 A power supply)
	vertical installation	-20 °C to +55 °C / -4 °F ... +131 °F (2 x 8 A power supply)
Storage, transport		-40 °C to +85 °C / -40 °F ... +185 °F
Connection data		
Type of connection	"PUSH IN"	
Conductor cross-section	Single-wired, fine-wired	0.14 ... 1.5 mm² (AWG 26 ... 16)
Weight		
Weight (operational status)	223 g	
Standards		
Product standard	IEC 61131-2	
Protocol standard	IEC 61162-450	
General data, see Section 3.2		

1) Restrictions for the use in potentially explosive atmosphere: Only horizontal installation and max. 8 A power supply!

The coupler provides only one alarm (process or diagnostic alarm) for each connected module at a time. Subsequent alarms of this module cannot be displayed until a pending alarm has been acknowledged. In the event that a pending alarm is not acknowledged in time the subsequent alarms will not be registered.

In addition to the coupler parameters the UR20-FBC-IEC61162-450 coupler provides module parameters for the connected modules (see table module parameters). All parameters can be set using the web server.

Overview of the editable parameters UR20-FBC-IEC61162-450

Parameter	Optional values	Default
Connection to fieldbus[1)]	On / Off	Off
Auto connect to fieldbus after reset[1)]	On / Off	Off
Multicast loopback[1)]	On / Off	Off
IP address	4 numbers between 0 and 255	192.168.0.222
Subnet mask	4 numbers between 0 and 255	255.255.255.0
Gateway	4 numbers between 0 and 255	192.168.0.1
IP configuration[1)]	Static / DHCP / BootP / DHCP and Static	DHCP and Static
DHCP timeout	Waiting time, 1 to 1000 s	30
IP address USB port[2)]	192.168.1.202, 192.168.2.202, 192.168.3.202 ... 192.168.20.202	192.168.1.202
Web server via Ethernet[2)]	Enabled / Disabled	Enabled
HTTPS setting	HTTP & HTTPS concurrent operation / only HTTPS; no HTTP	HTTP & HTTPS concurrent operation
Talker Identifier Mnemonic (used in SFI)	AG, AP, AI, BI, BN, CA, CD, CR, CS, CT, CV, CX, DF, DU, EC, EI, EL, EP, ER, FD, FE, FR, FS, GA, GB, GI, GL, GP, GQ, GN, HC, HE, HF, HN, HD, HS, IC, II, IN, LC, ND, NL, PP, RA, RC, SD, SG, SI, SN, SS, TI, UP, U0, U1, U2, U3, U4, U5, U6, U7, U8, U9, VD, VM, VW, VR, WD, WL, YX, ZA, ZC, ZQ, ZV, WI	PP
System Function ID (SFI)	Number, 1 to 9999	9999
Instance number for redundancy	Number, 0 to 9	0
Transmission Group (TX)	MISC, TGTD, SATD, NAVD, VDRD, RCOM, TIME, PROP, USR1, USR2, USR3, USR4, USR5, USR6, USR7, USR8, BAM1, BAM2, CAM1, CAM2, NETA, PGP1, PGP2, PGP3, PGP4, PGB1, PGB2, PGB3, PGB4, NONE	NONE
Talker Identifier Mnemonic (used in Destination SFI 1)	AG, AP, AI, BI, BN, CA, CD, CR, CS, CT, CV, CX, DF, DU, EC, EI, EL, EP, ER, FD, FE, FR, FS, GA, GB, GI, GL, GP, GQ, GN, HC, HE, HF, HN, HD, HS, IC, II, IN, LC, ND, NL, PP, RA, RC, SD, SG, SI, SN, SS, TI, UP, U0, U1, U2, U3, U4, U5, U6, U7, U8, U9, VD, VM, VW, VR, WD, WL, YX, ZA, ZC, ZQ, ZV, WI, NONE	NONE
Destination SFI 1 (used in TAG)	Number, 1 to 9999	9999
Talker Identifier Mnemonic (used in Destination SFI 2)	AG, AP, AI, BI, BN, CA, CD, CR, CS, CT, CV, CX, DF, DU, EC, EI, EL, EP, ER, FD, FE, FR, FS, GA, GB, GI, GL, GP, GQ, GN, HC, HE, HF, HN, HD, HS, IC, II, IN, LC, ND, NL, PP, RA, RC, SD, SG, SI, SN, SS, TI, UP, U0, U1, U2, U3, U4, U5, U6, U7, U8, U9, VD, VM, VW, VR, WD, WL, YX, ZA, ZC, ZQ, ZV, WI, NONE	NONE
Destination SFI 2 (used in TAG)	Number, 1 to 9999	9999
Talker Identifier Mnemonic (used in Destination SFI 3)	AG, AP, AI, BI, BN, CA, CD, CR, CS, CT, CV, CX, DF, DU, EC, EI, EL, EP, ER, FD, FE, FR, FS, GA, GB, GI, GL, GP, GQ, GN, HC, HE, HF, HN, HD, HS, IC, II, IN, LC, ND, NL, PP, RA, RC, SD, SG, SI, SN, SS, TI, UP, U0, U1, U2, U3, U4, U5, U6, U7, U8, U9, VD, VM, VW, VR, WD, WL, YX, ZA, ZC, ZQ, ZV, WI, NONE	NONE
Destination SFI 3 (used in TAG)	Number, 1 to 9999	9999
Cycle time	Time value, 0 to 255 * 1s	0
Send coupler status cyclically[1)]	On / Off	Off
Send coupler status on change[1)]	On / Off	Off
Ignore fieldbus linkdown[1)]	On / Off	Off
Process alarms	Enabled / Disabled	Disabled
Diagnostic alarms[1)]	Enabled / Disabled	Disabled
Output behaviour on fieldbus error[1)]	All outputs off / Enable substitute value /Hold last value	All outputs off
Module behaviour on hot swap	Continue data exchange / Behaviour like fieldbus error	Continue data exchange
Lock force mode	Force mode unlocked / Force mode locked	Force mode unlocked

1) See description below; 2) Change requires restart of the coupler.

Overview of the editable module parameters UR20-FBC-IEC61162-450

Parameter	Optional values	Default
Talker Identifier Mnemonic (used in SFI)	AG, AP, AI, BI, BN, CA, CD, CR, CS, CT, CV, CX, DF, DU, EC, EI, EL, EP, ER, FD, FE, FR, FS, GA, GB, GI, GL, GP, GQ, GN, HC, HE, HF, HN, HD, HS, IC, II, IN, LC, ND, NL, PP, RA, RC, SD, SG, SI, SN, SS, TI, UP, U0, U1, U2, U3, U4, U5, U6, U7, U8, U9, VD, VM, VW, VR, WD, WL, YX, ZA, ZC, ZQ, ZV, WI	PP
System Function ID (SFI)	Number, 1 to 9999	9999
Instance number for redundancy	Number, 0 to 9	0
Transmission Group (TX)	MISC, TGTD, SATD, NAVD, VDRD, RCOM, TIME, PROP, USR1, USR2, USR3, USR4, USR5, USR6, USR7, USR8, BAM1, BAM2, CAM1, CAM2, NETA, PGP1, PGP2, PGP3, PGP4, PGB1, PGB2, PGB3, PGB4, NONE	NONE
Talker Identifier Mnemonic (used in Destination SFI 1)	AG, AP, AI, BI, BN, CA, CD, CR, CS, CT, CV, CX, DF, DU, EC, EI, EL, EP, ER, FD, FE, FR, FS, GA, GB, GI, GL, GP, GQ, GN, HC, HE, HF, HN, HD, HS, IC, II, IN, LC, ND, NL, PP, RA, RC, SD, SG, SI, SN, SS, TI, UP, U0, U1, U2, U3, U4, U5, U6, U7, U8, U9, VD, VM, VW, VR, WD, WL, YX, ZA, ZC, ZQ, ZV, WI, NONE	NONE
Destination SFI 1 (used in TAG)	Number, 1 to 9999	9999
Talker Identifier Mnemonic (used in Destination SFI 2)	AG, AP, AI, BI, BN, CA, CD, CR, CS, CT, CV, CX, DF, DU, EC, EI, EL, EP, ER, FD, FE, FR, FS, GA, GB, GI, GL, GP, GQ, GN, HC, HE, HF, HN, HD, HS, IC, II, IN, LC, ND, NL, PP, RA, RC, SD, SG, SI, SN, SS, TI, UP, U0, U1, U2, U3, U4, U5, U6, U7, U8, U9, VD, VM, VW, VR, WD, WL, YX, ZA, ZC, ZQ, ZV, WI, NONE	NONE
Destination SFI 2 (used in TAG)	Number, 1 to 9999	9999
Talker Identifier Mnemonic (used in Destination SFI 3)	AG, AP, AI, BI, BN, CA, CD, CR, CS, CT, CV, CX, DF, DU, EC, EI, EL, EP, ER, FD, FE, FR, FS, GA, GB, GI, GL, GP, GQ, GN, HC, HE, HF, HN, HD, HS, IC, II, IN, LC, ND, NL, PP, RA, RC, SD, SG, SI, SN, SS, TI, UP, U0, U1, U2, U3, U4, U5, U6, U7, U8, U9, VD, VM, VW, VR, WD, WL, YX, ZA, ZC, ZQ, ZV, WI, NONE	NONE
Destination SFI 3 (used in TAG)	Number, 1 to 9999	9999
Cycle time[1)]	Time value, 0 to 255 * 1s	0
Enable reception	On / Off	Off
Transmission Group 1 (RX)	MISC, TGTD, SATD, NAVD, VDRD, RCOM, TIME, PROP, USR1, USR2, USR3, USR4, USR5, USR6, USR7, USR8, BAM1, BAM2, CAM1, CAM2, NETA, PGP1, PGP2, PGP3, PGP4, PGB1, PGB2, PGB3, PGB4, NONE	NONE
Transmission Group 2 (RX)	MISC, TGTD, SATD, NAVD, VDRD, RCOM, TIME, PROP, USR1, USR2, USR3, USR4, USR5, USR6, USR7, USR8, BAM1, BAM2, CAM1, CAM2, NETA, PGP1, PGP2, PGP3, PGP4, PGB1, PGB2, PGB3, PGB4, NONE	NONE
Transmission Group 3 (RX)	MISC, TGTD, SATD, NAVD, VDRD, RCOM, TIME, PROP, USR1, USR2, USR3, USR4, USR5, USR6, USR7, USR8, BAM1, BAM2, CAM1, CAM2, NETA, PGP1, PGP2, PGP3, PGP4, PGB1, PGB2, PGB3, PGB4, NONE	NONE

1) with input modules only

„Connected with fieldbus“ and „Auto connect to fieldbus after reset“ parameters

The default setting for both parameters is „Off“. With each power-up of the coupler the “Connected with fieldbus” paramter is automatically set to “Off” so that there is no IEC-61162.450-related functionality. Only if the “Auto connect to fieldubs after reset” parameter is set to “On” the “Connected to fieldbus” parameter will be set to “On” after power-up and thus the IEC-61162.450-related functionality will be activated.

If the “Auto connect to fieldubs after reset” parameter is set to “Off”, the “Connection to fieldbus” parameter will remain “Off” even after power-up until an administrator manually sets it to “On”.

„Multicast loopback“ parameter

If Multicast loopback is switched on, multicast packets are looped back if the coupler receives and transmits on the same multicast group (or several). This allows direct communication from module to module if one module is configured to listen to sentences in a particular transmission group and another module is configured to send sentences in the same transmission group.

The Multicast loopback is stopped in case of a fieldbus error.

“IP configuration” parameter

The web server can be used to define whether a static IP address shall be used or the address shall be assigned automatically (DHCP/BootP).
The coupler will by default send a DHCP discover first. If no assigment by a DHCP server follows during the parameterised waiting time, the static IP address 192.168.0.222 will be set.

„Diagnostic alarms“ parameter

If this parameter is deactivated, diagnostic alarms of modules are automatically acknowledged by the coupler and no diagnostic alarm sentences (**PWEIDIAG**) are sent.

If this parameter is activated, diagnostic alarms are not automatically acknowledged by the coupler, but must be explicitly confirmed. As long as there is at least one diagnostic alarm that has not yet been confirmed, the SF LED on the coupler lights red. In addition, the presence of at least one diagnostic message is displayed in the coupler view on the web server. Bit 0 is set in the coupler status and the status flag in the HBT sentence changes from “A” to “V”. If the module for which the diagnostic alarm is present is parameterised accordingly, a diagnostic alarm sentence is sent. For this, at least a valid (source) SFI and a valid transmission group (TX) must be parameterised for the transmission direction for the module. In order to be able to receive acknowledgements, the module must be parameterised in such a way that at least one transmission group is available for the reception direction and the module parameter “Reception enabled” must be set to “On”. Otherwise the module cannot receive any acknowledgements and the coupler will not drop the diagnostic alarm for this module.

The following table shows the effects of different parameter settings and hardware situations for the automatic acknowledgement of diagnostic alarms and the transmission of diagnostic alarm sentences.

Coupler parameter					
Diagnostic alarms	**Connected to fieldbus**	**Ignore fieldbus linkdown**	**Link**	**Mod**	**Result**
Disabled	–	–	–	–	Diagnostic alarm is automatically acknowledged, no display, no diagnostic alarm sentences is generated
–	Off	–	–	–	
–	–	Off	o	–	
Enabled	On	–	x	o	Diagnostic alarm is displayed (LEDs, web server) and saved, but no diagnostic alarm sentences is generated
Enabled	On	On	–	o	
Enabled	On	–	x	x	Diagnostic alarm is displayed (LEDs, web server) and saved, a diagnostic alarm sentences is generated
Enabled	On	On	–	x	

x: appropriate, o: not appropriate, –: no matter
Link: physical connection excisting at least with one port
Mod: module parametrised for sending

The coupler stores only one diagnostic alarm for each module. Only when the current diagnostic alarm is confirmed the coupler will continue with the next diagnostic alarm for this module. If only one diagnostic alarm was present in the module and is acknowledged, the module returns to normal behavior. As soon as all diagnostic alarms of all modules have been acknowledged, the coupler also returns to normal behavior.

If a diagnostic alarm of a module is acknowledged and there are no further diagnoses for this module, the module sends a diagnostic alarm sentence which indicates that there are no further diagnoses.

„Send coupler status cyclically" parameter

If this parameter is activated, the coupler sends a **PWEIHBT** sentence in addition to the HBT sentence (heartbeat sentence), which gives more information about the status of the station than the HBT sentence. The **PWEIHBT** sentence has the following syntax:

$PWEIHBT,i,cs,s*hh

i: Parameterised cycle time in seconds. The cycle time is the same as for HBT sentences.

cs: Value of the coupler status as ASCII/string representation. Example: If there is an error in the power supply for outputs, the **cs** field contains the character string "8192" (see coupler status table).

s: Sequence number. The sequence number is a value between 0 and 9 and is incremented by 1 with each sentence. After the value 9 has been reached, the sequence number is reset to 0. The sequence number is the same as for HBT sentences.

„Send coupler status on change" parameter

If this parameter is activated, the coupler sends a **PWEICSCH** sentence as soon as the coupler status changes (CSCH: Coupler Status Changed). This parameter can be set alternatively or in addition to the "Send coupler status cyclically" parameter. The **PWEICSCH** sentence has the following syntax:

$PWEICSCH,cs,message*hh

cs: Value of the coupler status as ASCII/string representation. Example: If there is an error in the power supply for outputs, the **cs** field contains the character string "8192" (see coupler status table).

message: The message provides the same information as the **cs** field, but in a more readable form. Example: If there is an error in the power supply for outputs, the message field contains the character string "Voltage UOUT error". If more than one bit is set in the coupler status, the **message** field contains the character string "Multiple status bits set". If the coupler status changes from a value not equal to 0 (at least one status bit set) to the value 0 (no status bit set), the **message** field contains the character string "Status is ok".

„Ignore fieldbus linkdown" parameter

If this parameter is set to "On", the absence of a physical connection at both Ethernet ports (fieldbus linkdown) is not considered a fieldbus error. Thus the parameter "Output behavior on fieldbus error" is not used in case of a fieldbus linkdown. Communication with the modules on the systembus continues normally. If the "Multicast loopback" parameter is also set to "On", modules can continue to communicate with each other.

"Output behaviour on fieldbus error" parameter

The absence of a physical connection at both Ethernet ports (fieldbus linkdown) is detected as a fieldbus error. A fieldbus error is also detected if the "Connected to fieldbus" parameter is set to "Off"

If a fieldbus error occurs, communication with the modules is interrupted. This also affects a parameterised Multicast loopback.

Via the parameter "Ignore fieldbus linkdown" the coupler can be parameterised in such a way that the absence of a physical connection at both Ethernet ports is not considered a fieldbus error (see "Ignore fieldbus linkdown" parameter).

Diagnostic alarm PWEIDIAG

With appropriate parameterisation, a module sends diagnostic alarm sentences. The **PWEIDIAG** senctence for displaying diagnostic alarms has the following syntax (DIAG: Diagnosis):

$PWEIDIAG,e,message*hh

e The error code is the ASCII/string representation of the error indicator byte as documented in the description of the respective module (example for the UR20-4AI-UI-16-DIAG module):

Diagnostic data UR20-4AI-UI-16-DIAG

Name	Byte	Bit	Description	Default
Error indicator	0	0	Module error	
		1	Internal error	
		2	External error	
		3	Channel error	
		4	Error	
		5	Power supply fault	
		6	Reserved	0
		7	Parameter error	

Example: If the module has an error in the supply voltage, the error code used in the sentence is the character string "32".
If there is more than one error, more than one bit is set and the value of the error code is set accordingly. Example: If a module has an error in the supply voltage and there is also a channel error, the value of the error code is the character string "40".

message The message provides the same information as the error code, but in a more readable form. Example: If a module has an error in the supply voltage, the **message** field contains the string "Power supply fault". If more than one error condition is present and more than one bit is set in the error indicator byte, the **message** field contains the string "Multiple errors". If

there are no more diagnostic sentence in the module, the error code is “0” and the character string “No error” is used. This is the case if the last active diagnostic sentence was acknowledged.

Diagnostic alarm confirmation PWEIDIAK

Diagnostic alarms can be confirmed with the **PWEIDIAK** sentence. The **PWEIDIAK** sentence for confirming diagnostic alarms has the following syntax (DIAK: Diagnosis Acknowledgement):

$PWEIDIAK,e*hh

e The error code of the diagnostic alarm to be confirmed. If the error code does not match the error code of the current diagnostic alarm, the current diagnostic alarm is not acknowledged. The character string “255” is a special case and can be used as a wildcard to confirm any diagnostic alarm.
A diagnostic alarm is always acknowledged on the basis of the error code and not on the basis of individual error bits. Therefore, the error code in the confirmation sentence must be identical to that in the alarm sentence. It is not possible to confirm error states only partially. If, for example, a module has a supply voltage error and a channel error, it sends a **PWEIDIAG** sentence with the error code “40”. The confirming **PWEIDIAK** sentence must also use the error code “40”. It is not possible, for example, to acknowledge the power supply error first with error code “32” and then the channel error with error code “8”. It is also possible to use the wildcard error code “255” instead of the exact error code used in the **PWEIDIAG** sentence.

Example for a diagnostic alarm: short-circuit error in the UR20-1COM-232-485-422

In this example, a short-circuit error is caused in a UR20-1COM-232-485-422 module by temporarily connecting the 24 V pin of the module directly to a ground pin. The module recognises this error state and if the module and the coupler are parameterised as described above, the following full sequence is sent.

$PWEIDIAG,32,Power supply fault*27

As soon as this diagnostic alarm is confirmed by sending a **PWEIDIAK** sentence with the error code “32” or “255” to the module, the module sends a new diagnostic alarm:

$PWEIDIAG,53,Multiple errors*1D

This means that the short-circuit has caused several additional errors, namely a module error (bit 0), an external error (bit 2) and a general error (bit 4).
After confirmation of this diagnostic alarm by sending a corresponding **PWEIDIAK** sentence with the error code “53” or “255” to the module, the module sends a new diagnostic alarm:

$PWEIDIAG,21,Multiple errors*18

This means that the power supply error is no longer present, but the other error states are still present and must be confirmed again.
After confirmation of this diagnostic interrupt by sending a corresponding PWEIDIAK sentence with the error code “21” or “255” to the module, the module sends a last diagnostic sentence:

$PWEIDIAG,0,No error*49

This indicates that there are no more diagnostic alarms for this module.

Notes on the use of digital output modules

To control digital outputs, the **PWEIDOS** sentence was defined with the following syntax:

$PWEIDOS,o,cn,s*hhh

DOS Digital Output Set

o Operation: clear (0) oder set (1)

cn Name of the addressed channel as assigned in the web server, with a maximum of 15 valid characters according to IEC 61162-1. If no name is assigned, it is called “Channel X” with channel number X.

s Sequence number with which a command can be linked to a response. The sequence number can be a number from 1 to 9. Each command should have its own number.

Notes on the use of UR20-4DO-PN-2A

With the UR20-4DO-PN-2A output module, each channel can be parameterised either positively (p-switching, sourcing) or negatively (n-switching, sinking). Therefore, the module needs not only the information whether the respective digital output should be switched on or off, but also the information whether it should switch positive or negative.
Two sentences with the following syntax have been defined for the output module UR20-4DO-PN-2A.

$PWEIDOSP,o,cn,s*hh for switching positively
$PWEIDOSN,o,cn,s*hh for switching negatively
DOS Digital Output Set
P, N switching positively (P) or negatively (N)
o Operation: clear (0) oder set (1)
cn Name of the addressed channel as assigned in the web server, with a maximum of 15 valid characters according to IEC 61162-1. If no name is assigned, it is called “Channel X” with channel number X.
s Sequence number with which a command can be linked to a response. The sequence number can be a number from 1 to 9. Each command should have its own number.

The UR20-4DO-PN-2A does not process the **PWEIDOS** sentence for digital output modules. If a **PWEIDOS** sentence is addressed to a UR20-4DO-PN-2A module, the module responds with a **PWEINAK** sentence with the error message “Module does not support this sentence”.
To set or clear a digital output on this module, either **PWEIDOSP** or **PWEIDOSN** must be used. **PWEIDOSP** and **PWEIDOSN** sentences can be sent in any order.

Digital output modules with defined switching type such as UR20-4DO-P-2A and UR20-4DO-N-2A do not process **PWEIDOSP** sentences and **PWEIDOSN** sentences. If a **PWEIDOSP** sentence or a **PWEIDOSN** sentence is addressed to a digital output module, the module responds with a **PWEINAK** sentence with the error message “Module does not support this sentence”.
To set or clear a digital output on these modules, the **PWEIDOS** sentence must be used, since the switching type is defined by the module type used.

Notes on the use of analogue output modules

The coupler only supports analogue output modules with maritime approval (see list of supported modules).

With an analogue output module, connected devices can be controlled with ±5 V, ±10 V, 0 ... 5 V, 0 ... 10 V, 1 ... 5 V, 2 ... 10 V, 0 ... 20 mA or 4 ... 20 mA. The output range can be parameterised channel by channel.
A sentence with the following syntax has been defined for analogue output modules.

$PWEIAOS,v,u,cn,s*hh
AOS Analogue Output Set
v Value to be output by the module. The value must be a valid floating point number, the character ‘.’ is used as decimal point, e.g. 5.3 or -9.6. If no decimal point is required, it can also be omitted, e.g. 10 or -3 are also accepted. If the value is below the “Underloading” value specified for the parameterised output range, the module responds with a **PWEINAK** sentence with the error message “Underloading error”. If the value is above the “Overloading” value specified for the parameterised output range, the module responds with a **PWEINAK** sentence with the error message “Overloading error”.
u Unit for the value. “V” for volts and “A” for amps are accepted. If the unit does not match “V” or “A”, the module responds with a **PWEINAK** sentence with the error message “Type/unit not supported”. The unit must also match the parameterised output range, i.e. if the output range is ±5 V, ±10 V, 0 ... 5 V, 0 ... 10 V, 1 ... 5 V or 2 ... 10 V is parameterised, “V” must be used in the unit field, and if 0 ... 20 mA or 4 ... 20 mA is parameterised, “A” must be used in the unit field. If the unit in the unit field does not match the parameterised output range of the addressed channel, the module responds with a **PWEINAK** sentence with the error message “Wrong channel configuration”.
Special case: If the output range of the addressed channel is parameterised as “deactivated”, the module responds with a **PWEINAK** sentence with the error message “Channel is disabled”.

Since IEC 61162 does not support unit prefixes such as “milli”, for example, the value “0.001” must be set in the value field for a current of 1 mA and the unit field must contain the unit “A”.

cn Name of the addressed channel as assigned in the web server, with a maximum of 15 valid characters according to IEC 61162-1. If no name is assigned, it is called “Channel X” with channel number X.

s Sequence number with which a command can be linked to a response. The sequence number can be a number from 1 to 9. Each command should have its own number.

Notes on the use of digital and analogue input modules

The coupler can map connected digital and analogue inputs to IEC 61162-1/NMEA 0183 sentences and distribute them via the connected IEC 61162-450 network. An XDR sentence with the following syntax is used for transducers.

$–XDR,t,v.v,u,cn,t,v.v,u,cn*hh

In general an XDR sentence can contain values from 1 to n transducers. With the UR20-FBC-IEC61162-450 coupler n = 2.

t Type of transducer X. Type “G” (generic) is used for digital inputs. For analogue inputs, type “U” is used for voltage or type “I” for current, depending on the selected measuring range. If the measuring range of an analgoue channel is disabled, type “G” is also used.

v.v Measured data of transducer X. With digital inputs, the measured data are either “0” or “1”, depending on the state of the digital input. With analogue inputs, this field contains the measured value. If an analogue channel is disabled, the field is empty (null field).

u Unit of measurement transducer X. With digital inputs, this field is empty (null field). With analogue inputs this field is eihter “V” for Volts or “A” for Amps, depending on the parameterised measurement range.

cn Name of the addressed channel as assigned in the web server, with a maximum of 15 valid characters according to IEC 61162-1. If no name is assigned, it is called “Channel X” with channel number X.

The “Cycle time” parameter defines how often the module sends sentences. In order to save communication overhead, the values of two transducers respectively two channels are transmitted within one XDR sentence. This means the first XDR sentence contains the values of channel 0 and channel 1, the second XDR sentence contains the values of channel 2 and 3 and so on. Each XDR sentence is transmitted in its own UDP datagram. Datagrams are sent block by block in quick succession, depending on network load and available bandwidth, with typically less than 1 ms delay between datagrams. The cycle time describes the period between the XDR sentences for two channels. If the parameter is set to 0, the coupler does not send any sentences for this module.

Possible reactions to diagnostic alarm sentences

A **PWEIDOS-**, **PWEIDOSP-**, **PWEIDOSN-** or **PWEIAOS** sentence is answered with a **PWEIACK** (**ACK:** acknowledge) in the positive case or with a **PWEINAK** (**NAK**: negative acknowledge) in the negative case.

A **PWEIACK** sentence has the following syntax:
$PWEIACK,cn,s,message*hh

cn Name of the addressed channel as assigned in the web server, with a maximum of 15 valid characters according to IEC 61162-1. If no name is assigned, it is called “Channel X” with channel number X.

s Sequence number with which a command can be linked to a response. The sequence number can be a number from 1 to 9. Each command should have its own number. The coupler does not check whether the number has been changed, but only copies the sequence number specified in the command into the response so that the sender of a command can assign the response accordingly.

message Satus message, currently only the „OK” string is used.

A **PWEINAK** sentence has the following syntax:
$PWEINAK,cn,s,message*hh

cn Name of the addressed channel as assigned in the web server, with a maximum of 15 valid characters according to IEC 61162-1. If no name is assigned, it is called “Channel X” with channel number X.

s Sequence number with which a command can be linked to a response. The sequence number can be a number from 1 to 9. Each command should have its own number. The coupler does not check whether the number has been changed, but only copies the sequence number specified in the command into the response so that the sender of a command can assign the response accordingly.

message Message describing the error. There are general error messages that are the same for all **PWEIX** commands, and there are error messages that are used only by digital modules or only by analogue modules (see next section).

General error messages

Checksum error

The checksum of the sentence is incorrect. The coupler does not process the sentence any further. The fields **cn** and **s** are empty.

Unknown sentence

The sentence is completely unknown to the coupler.
A digital or an analogue output module is explicitly addressed using the target parameter in a TAG block and the sentece is not **PWEIDOS**, **PWEIDOSP**, **PWEIDOSN** or **PWEIAOS**.
The coupler does not process the sentence any further. The fields **cn** and **s** in the **PWEINAK** sentence are empty. If a known sentence is sent to a wrong module, the string „Module does not support this sentence“ is used (e.g. a **PWEIDOS** or **PWEIAOS** sentence adresses a UR20-4DO-PN-2A module that only accepts **PWEIDOSP** and **PWEIDOSN** sentences).

Syntax error

The checksum of the sentence is correct and the sentence is recognised as a known sentence, but the syntax of the received sentence is in some way inconsistent with the expected syntax (e.g. too many or too few fields, characters in a field where only numbers are expected, etc.).

The coupler does not process the sentence any further. The fields **cn** and **s** in the **PWEINAK** sentence are empty.

Module does not support this sentence

The checksum of the sentence is correct and the sentence is recognised as a known sentence, also the syntax of the sentence is correct but the sentence is addressed to a module that does not support this sentence (e.g. a **PWEIDOS** or **PWEIAOS** sentence addresses a UR20-4DO-PN-2A module, that accepts only **PWEIDOSP** and **PWEIDOSN** sentences).
The channel name and the sequence number are copied from the received sentence.

Channel not found

The channel name in the received sentence does not match any channel name of the addressed module. This error message also indicates that all previous checks were successful (checksum, syntax, supported by the module).
The channel name and the sequence number are copied from the received sentence.

Internal error

The coupler has an internal error. Please save the service file and send it to Weidmüller. The service file contains information that can help with troubleshooting.

Error messages with digital output modules

Unknown operation

Digital output modules only support the operations for setting an output channel to 0 or 1, so the operation field must use either 0 or 1 (see “o” in the **PWEIDOS/PWEIDOSP/PWEIDOSP/PWEIDOSN** sentences above). Otherwise, no operation will be performed and a **PWEINAK** response with this error message will be sent. This error message also indicates that all previous checks were successful (checksum, syntax, supported by the module).
The channel name and the sequence number are copied from the received sentence. If the operation field is empty or contains a non-integer value, this is interpreted as a syntax error (see above).

Error messages with analogue output modules

Type/unit not supported

The unit field of a **PWEIAOS** sentence is not “V” or “A”. The sentence is not processed any further, the specified value is not set.
This error message also indicates that all previous checks were successful (checksum, syntax, supported by the module). The channel name and the sequence number are copied from the received sentence.

Channel is disabled

A deactivated channel was addressed with a **PWEIAOS** sentence to output a given voltage or current value. The sentence is not processed any further and a **PWEINAK** sentence with this error message is sent.
This error message also indicates that all previous checks were successful (checksum, syntax, module supported, type/unit supported). The channel name and the sequence number are copied from the received sentence.

Wrong channel configuration

A channel was addressed with a **PWEIAOS** sentence to output a voltage value, whereas the output range is parameterised for current output or vice versa. The sentence is not processed any further and a **PWEINAK** sentence with this error message is sent.
This error message also indicates that all previous checks were successful (checksum, syntax, module supported, type/unit supported). The channel name and the sequence number are copied from the received sentence.

Overloading error

An analogue channel was addressed with a **PWEIAOS** sentence for the output of a voltage or current value that exceeds the overload value of the parameterised measuring range. The sentence is not processed any further and a **PWEINAK** sentence with this error message is sent.

This error message also indicates that all previous checks were successful (checksum, syntax, supported by the module, type/unit supported, channel configuration is correct). The channel name and the sequence number are copied from the received sentence.

Underloading error

An analogue channel was addressed with a **PWEIAOS** sentence for the output of a voltage or current value that exceeds the underload value of the parameterised measuring range. The sentence is not processed any further and a **PWEINAK** sentence with this error message is sent.
This error message also indicates that all previous checks were successful (checksum, syntax, supported by the module, type/unit supported, channel configuration is correct). The channel name and the sequence number are copied from the received sentence.

Coupler status UR20-FBC-IEC61162-450

Bit	Name	Meaning
0	Summarized module diagnosis	A diagnosis is available for at least one module with diagnostics functionality.
1	Station pending	More than one module as been pulled. In this status, the coupler cannot determine whether one of the disconnected modules is plugged back into the correct slot.
2	Errorbit 2	Reserve bit 2, currently not used
3	Systembus error	Error on system bus. Communcation with the connected modules is disrupted.
4	Errorbit 4	Reserve bit 4, currently not used
5	Errorbit 5	Reserve bit 5, currently not used
6	I/O-Configuration error	Differing configuration. The module list has changed.
7	Errorbit 7	Reserve bit 7, currently not used
8	Errorbit 8	Reserve bit 8, currently not used
9	Errorbit 9	Reserve bit 9, currently not used
10	Force mode active	Force mode was activated via the web server. Forced channels do not exchange data with the master.
11	Errorbit 11	Reserve bit 11, currently not used
12	Errorbit 12	Reserve bit 12, currently not used
13	Voltage U_{OUT} error	Error in the supply voltage of outputs
14	Voltage U_{IN} error	Error in the supply voltage of system and inputs
15	Errorbit 15	Reserve bit 15, currently not used

Supported I/O modules

Item No.	Module
1315170000	UR20-4DI-P
2009360000	UR20-4DI-P-3W
1315180000	UR20-8DI-P-2W
1394400000	UR20-8DI-P-3W
1315190000	UR20-8DI-P-3W-HD
1315200000	UR20-16DI-P
1315210000	UR20-16DI-P-PLC-INT
1315350000	UR20-4DI-N
1315370000	UR20-8DI-N-3W
1315390000	UR20-16DI-N
1315400000	UR20-16DI-N-PLC-INT
1315220000	UR20-4DO-P
1315230000	UR20-4DO-P-2A
1394420000	UR20-4DO-PN-2A
1315240000	UR20-8DO-P
1509830000	UR20-8DO-P-2W-HD
1315250000	UR20-16DO-P
1315270000	UR20-16DO-P-PLC-INT
1315410000	UR20-4DO-N
1315420000	UR20-4DO-N-2A
1315430000	UR20-8DO-N
1315440000	UR20-16DO-N
1315450000	UR20-16DO-N-PLC-INT
1315620000	UR20-4AI-UI-16
1315690000	UR20-4AI-UI-16-DIAG
1993880000	UR20-4AI-UI-DIF-16-DIAG
1394390000	UR20-4AI-UI-12
2453880000	UR20-4AO-UI-16-M
2453870000	UR20-4AO-UI-16-M-DIAG
1315750000	UR20-1COM-232-485-422

5.11 CC-Link fieldbus coupler

The UR20-FBC-CC fieldbus coupler is a Remote Device Station (CC-Link slave) according to the CC-Link specification.
The coupler enables the cyclic and the extended cyclic messaging transfer as well as the message transfer.
The coupler is the head module for the u-remote system bus, to which up to 64 active u-remote modules can be connected. The coupler is connected to the CC-Link fieldbus with a 5-pole PCB plug-in connector.
The coupler can exchange I/O data with a CC-Link master using the protocol version V 1.11 or V 2.00. Diagnostics and alarms are exchanged via the alarm message protocol. Up to four occupied station addresses as well as an Extended-Cyclic-Messaging factor can be parameterized.
The coupler can be accessed with a system-independent web server application via the USB service interface. Thus, all information, such as diagnostics, status values and parameters, can be read and all connected modules can be simulated or forced.
The station's main power supply is integrated in the coupler. Power is supplied via two 4-pole connectors, separated into the input and output current paths.

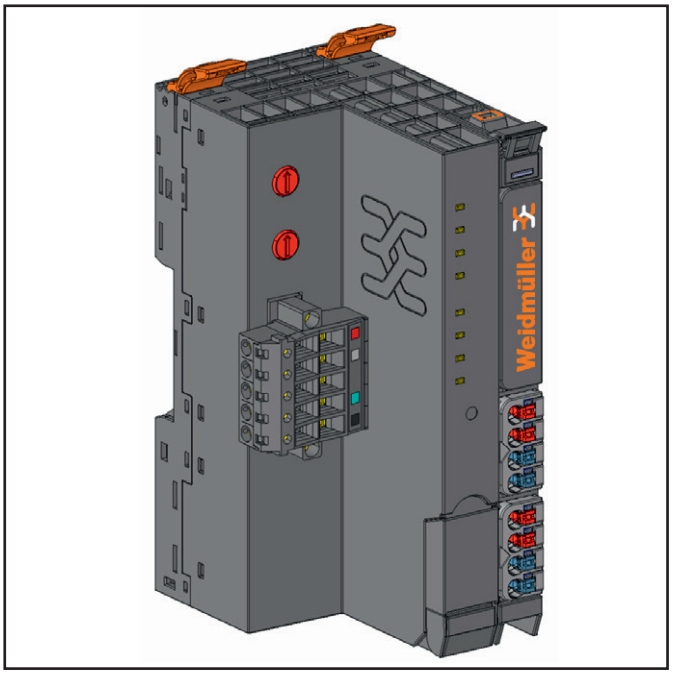

Fieldbus coupler UR20-FBC-CC (Item No. 2625010000)

Status indicators

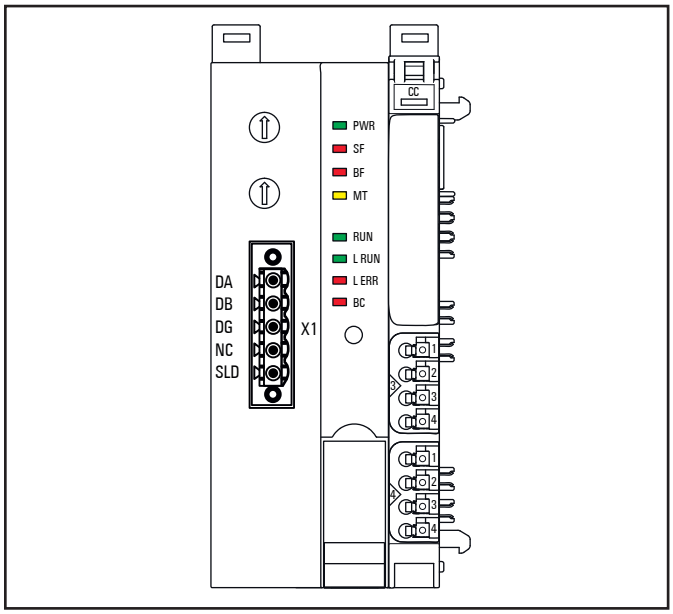

LED status indicators UR20-FBC-CC, troubleshooting see chapter 12

PWR	Power LED	**Green**: Supply voltage connected **Red:** Coupler not yet started completely or hardware error
SF	Collective error	**Red:** Configuration error, or error in the coupler, or error in a module, or there is a new diagnostic message **Red flashing**: Station in Force mode
BF	Bus failure	**Red:** No connection to the fieldbus **Red flashing**: Configuration error, no connection to the control unit, or error in the parameter set or slave address error or firmware update is running
MT	Maintenance	**Yellow**: Error on the system bus or fieldbus
RUN	CC-Link device status	**Green**: Device status OK **Off:** Power up or Watchdog timer error
L RUN	CC-Link data exchange	**Off**: No data exchange **Green**: Data exchange active
L ERR	CC-Link error	**Off**: No data exchange **Red flashing**: Rotary switch settings have been changed during operation and do not match with the current device address **Red**: Communication error (own station) or invalid device address
BC	CC-Link bus configuration	**Off**: CC-Link device not yet ready for operation **Red/green flashing** (0.5 seconds each): Auto bauding in progress **Red**: Carrier is missing **Green**: – Static Baudrate is selected: Carrier is present. – After Autobauding is finished: Carrier is present AND Autobauding has detected a baud rate.

Addressing

An address between 1 and 64 can be set for the fieldbus coupler using the two rotary switches. The address is recognized during power up of the coupler.

Each address may be assigned only **once** in the overall bus structure. The default setting is 1.

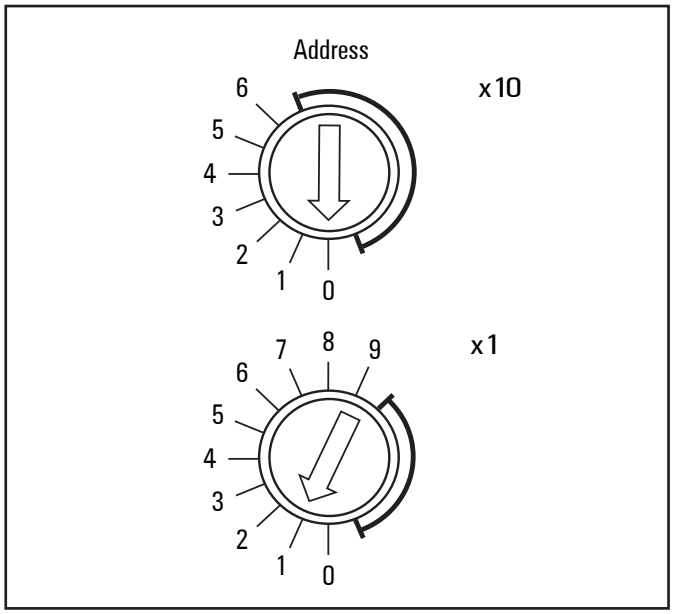

Default setting UR20-FBC-CC: Address = 1

► Use the **x10** rotary switch to set the decade and the **x1** rotary switch to set the units digit.

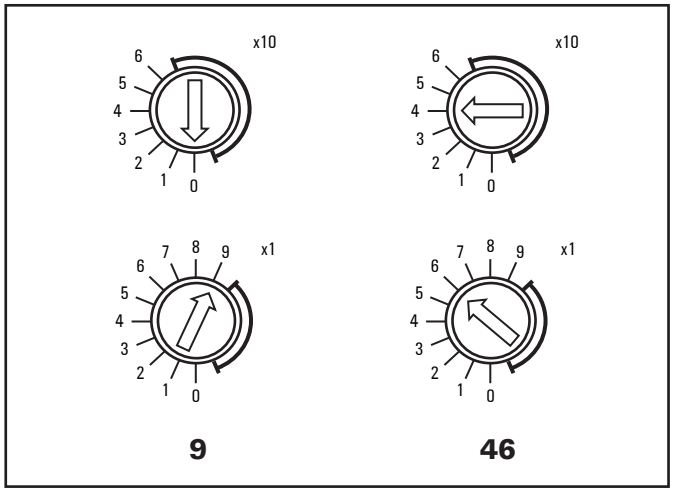

Examples for addressing the UR20-FBC-CC

CC-Link address **9**: 0x10, 9x1
CC-Link address **46**: 4x10, 6x1

If more than one occupied station address is parameterised the set address is the start address.

Changing the address

► Set the desired address.
► Restart the coupler.

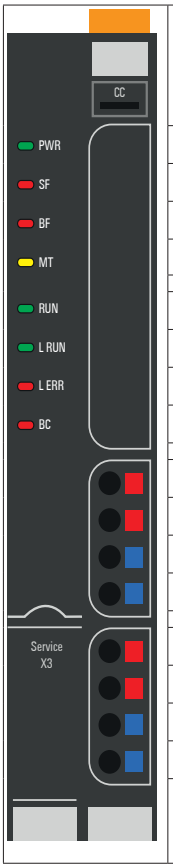

	Coupler power supply LED green: supply voltage >18 V red: at least one current path <18 V
3.1	Green: Input current path supply voltage > 18 V DC
3.2	Red: Input current path supply voltage < 18 V DC
3.4	Red: Internal fuse defective
4.1	Green: Output current path supply voltage > 18 V DC
4.2	Red: Output current path supply voltage < 18 V DC
4.4	Red: Internal fuse defective

LED indicators UR20-FBC-CC, troubleshooting see chapter 12

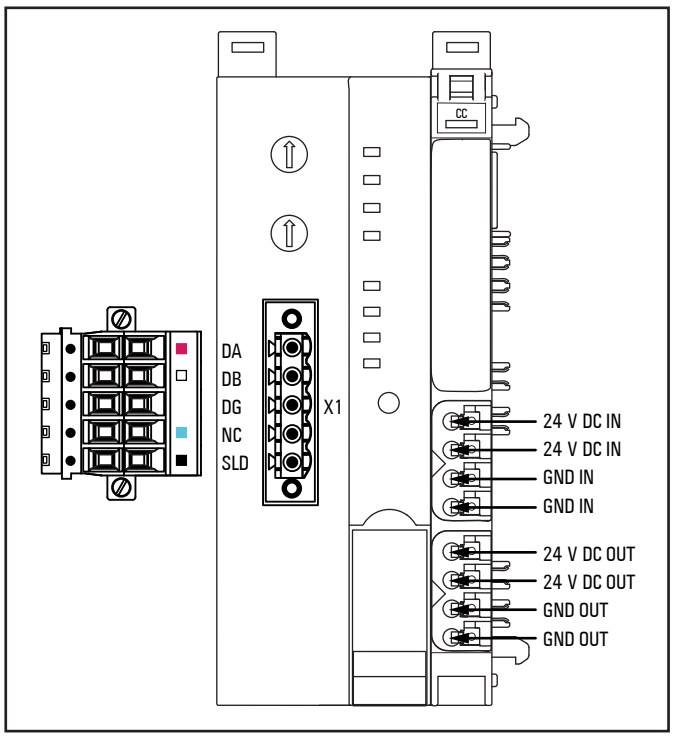

Connection diagram UR20-FBC-CC

ATTENTION

Risk of material damage!

In the case of a maximum power supply of >8 A and a maximum temperature of >+55 °C, all four contacts must be connected with 1.5 mm² wiring!

Pin assignment of the 5 pole socket

Pin	Signal	Description
1	DA	Data line differential signal A+
2	DB	Data line differential signal B-
3	DG	Data line ground
4	NC	Not connected
5	SLD	Shield

Always use CC-Link compliant cables for the fieldbus wiring.

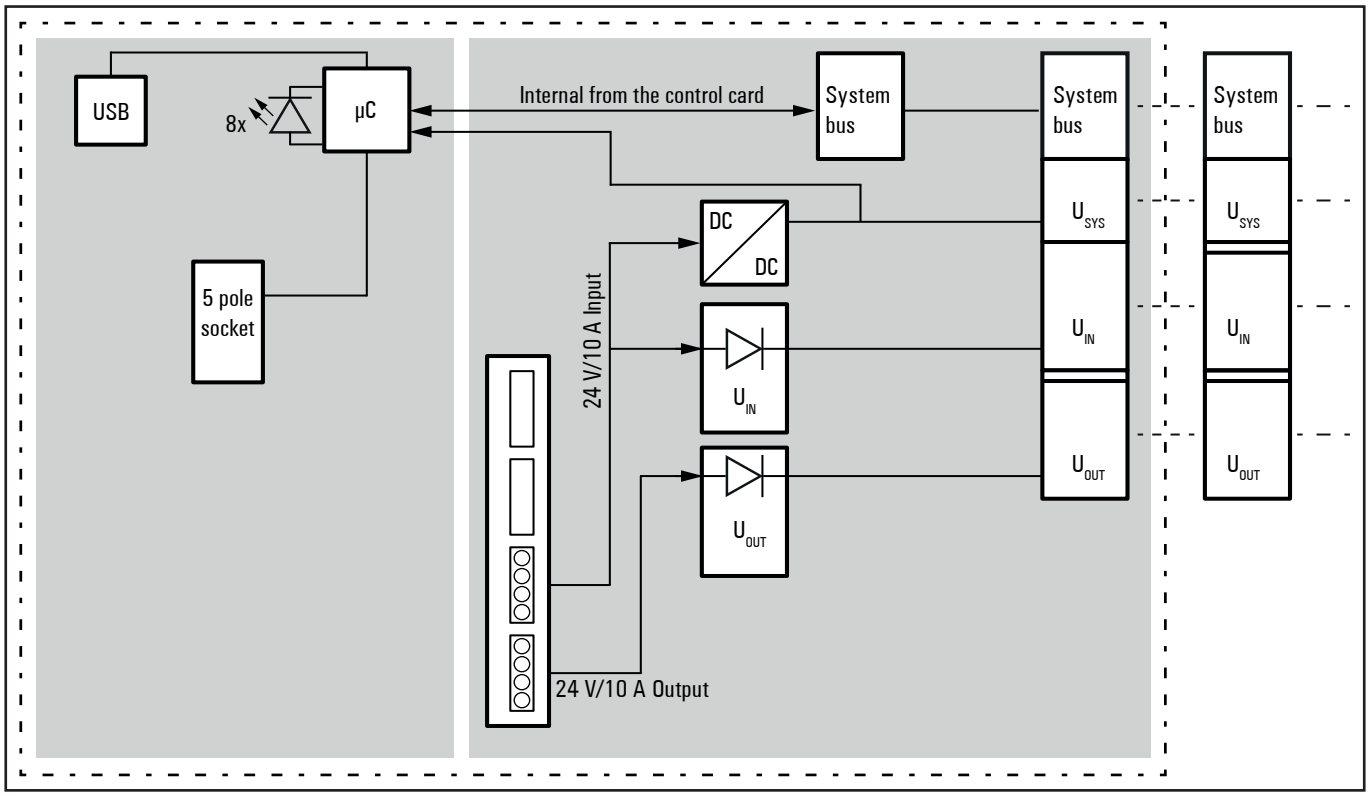

Block diagram UR20-FBC-CC

Technical data UR20-FBC-CC (Item No. 2625010000)

System data		
Connection	Socket for 5-pole PCB plug-in connector (screw connection)	
Fieldbus protocol	CC-Link	
Input data width	max. 256 Byte (RWr), max. 892 Bit (RX)	
Output data width	max. 256 Byte (RWw), max. 892 Bit (RY)	
Parameter data	max. 64 x 64 Byte	
Diagnostic data	max. 64 x 47 Byte	
Number of modules	max. 64 active	
Configuration interface	Micro USB 2.0	
Transfer rate	Fieldbus	max. 10 MBit/s
	u-remote system bus	max. 48 Mbit/s
Fieldbus		
Station type	Remote Device Station	
Device type	Digital/Analogue I/O	
Supply		
Supply voltage for system and inputs	24 V DC +20% / -15%	
Supply voltage for outputs	24 V DC +20% / -15%	
Feed-in current[1] for input modules	max. 10 A	
Feed-in current[1] for output modules	max. 10 A	
Current consumption from system current path I_{sys}	75 mA	
Temperature data[1]		
Operation	Operation (horizontal installation)	-20 °C to +60 °C / -4 °F ... +140 °F (2 x 10 A power supply)
	Operation (vertical installation)	-20 °C to +55 °C / -4 °F ... +131 °F (2 x 8 A power supply)
Storage, transport		-40 °C to +85 °C / -40 °F ... +185 °F
Connection data		
Type of connection	„PUSH IN“	
Conductor cross-section	Single-wired, fine-wired	0.14 ... 1.5 mm² (AWG 16 ... 26)
Weight		
Weight (operational status)	216 g (without PCB plug-in connector)	
General data, see Section 3.2		

1) Restrictions for the use in potentially explosive atmosphere: Only horizontal installation and max. 8 A power supply!

Overview of editable parameters UR20-FBC-CC

Parameter	Optional values	Default
Power up baud rate	156 kbit/s / 625 kbit/s / 2,5 Mbit/s / 5 Mbit/s / 10 Mbit/s / Auto baud	Auto baud
Protocol version	V 1.11 / V 2.00	V 1.11
Number of occupied stations	1 / 2 / 3 / 4	2
Extended-Cyclic-Messaging-Factor[1)]	1x / 2x / 4x / 8x	1x
Process alarm	disabled / enabled	disabled
Diagnostic alarm	disabled / enabled	disabled
IP-Address USB port	192.168.1.202, 192.168.2.202, 192.168.3.202 ... 192.168.20.202	192.168.1.202
HTTPS setting	HTTP & HTTPS concurrent operation / only HTTPS; no HTTP	HTTP & HTTPS concurrent operation
Output behaviour on fieldbus error	All outputs off / Enable substitute value / Hold last value	All outputs off
Module behaviour on hot swap	Continue data exchange / Behaviour as with fieldbus error	Continue data exchange
Data format	Motorola / Intel	Intel

1) Only with protocol version V 2.00

Address ranges

The CC-Link master assigns certain address ranges to the I/O data depending on the parameter settings **Number of occupied stations** and **Extended-Cyclic-Messaging-Factor**.
For the bit registers, 16 points are always defined for the system range at the end of the I/O data address range.
Input bits and ouput bits are specified bit by bit in **points**.
Register words are specified in **words**.

Assigned address ranges

Occupied stations	Bits[1)]	Description			
		V 1.11 V 2.00/Factor 1	V 2.00/ Factor 2	V 2.00/Factor 4	V 2.00/Factor 8
1	RX, RY	32 points each	32 points each	64 points each	128 points each
	RWr, RWw	4 words each	8 words each	16 words each	32 words each
2	RX, RY	64 points each	96 points each	192 points each	384 points each
	RWr, RWw	8 words each	16 words each	32 words each	64 words each
3	RX, RY	96 points each	160 points each	320 points each	640 points each
	RWr, RWw	12 words each	24 words each	48 words each	96 words each
4	RX, RY	128 points each	224 points each	448 points each	896 points each
	RWr, RWw	16 words each	32 words each	64 words each	128 words each

1) RX: Input bits, RY: Output bits, RWr: readable register words, RWw: writeable register words

The CC-Link specific „System Area“ is located in the last 16 bits of RY (s), RX (s) CC-Link process data range.

Remote I/O data system range

Link input		Link output	
RX (m+n)0	reserved	RY (m+n)0	reserved
RX (m+n)1	reserved	RY (m+n)1	reserved
RX (m+n)2	reserved	RY (m+n)2	reserved
RX (m+n)3	reserved	RY (m+n)3	reserved
RX (m+n)4	0	RY (m+n)4	reserved
RX (m+n)5	0	RY (m+n)5	reserved
RX (m+n)6	0	RY (m+n)6	reserved
RX (m+n)7	reserved	RY (m+n)7	reserved
RX (m+n)8	reserved	RY (m+n)8	reserved
RX (m+n)9	reserved	RY (m+n)9	reserved
RX (m+n)A	reserved	RY (m+n)A	reserved
RX (m+n)B	Remote station ready flag	RY (m+n)B	reserved
RX (m+n)C	Message transmission reception flag	RY (m+n)C	Message transmission request flag
RX (m+n)D	Message handshake flag	RY (m+n)D	Message handshake flag
RX (m+n)E	reserved	RY (m+n)E	reserved
RX (m+n)F	reserved	RY (m+n)F	reserved

m Register number of the remote I/O device

n Highest usable register number for the amount of used I/O devices

The Remote station ready flag indicates that the device is ready for process data exchange.

Status word

The coupler status word describes the status of the u-remote station including the following information:

Coupler status bits UR20-FBC-CC

Bit	Name	Meaning
0	Summarized module diagnosis	Module diagnostic is present. A diagnosis is available for at least one module with diagnostics functionality.
1	Station pending	More than one electronic unit or module has been pulled from the station.
2	Errorbit 2	Reserve bit 2, currently not used
3	Systembus error	Error on the system bus. Communication with the connected modules is disrupted.
4	Errorbit 4	Reserve bit 4, currently not used
5	Errorbit 5	Reserve bit 5, currently not used
6	I/O-Configuration error	Deviation in the configuration. The module list has changed. The list of configured modules differs from the module list detected by the coupler.
7	Master configuration error	The station contains modules that are not supported by the coupler.
8	Errorbit 8	Reserve bit 8, currently not used
9	Errorbit 9	Reserve bit 9, currently not used
10	Force mode active	Web server force mode is active. Force mode was activated through the web server.
11	Errorbit 11	Reserve bit 11, currently not used
12	Errorbit 12	Reserve bit 12, currently not used
13	Voltage U_{OUT} error	Error in the supply voltage of outputs
14	Voltage U_{IN} error	Error in the supply voltage of system and inputs
15	IO-Link diagnosis	A diagnosis is present on an IO-Link device.

Process data mapping UR20-FBC-CC

Item No.	Product	Process data mapping		Data width [Byte]			
				RX	RY	RWr	RWw
2625010000	UR20-FBC-CC	**Status/Diagnostic Data**					
		RX (n):	Diagnosis Alarm event notify				
		RX (n+1):	Process Alarm event notify				
		RX (n+2):	Pull Alarm event notify				
		RX (n+3):	Plug Alarm event notify				
		RX (n+4):	Reserved				
		...					
		RX (n+7):	Reserved				
		RX (n+8):	TransmCmplt (Parameter Protocol)				
		RX (n+9):	TransmError (Parameter Protocol)				
		RX (n+10):	Reserved				
		...					
		RX (n+15):	Reserved				
		Parameter Data					
		RY (n):	Reserved				
		...					
		RY (n+7):	Reserved	2	2	8	8
		RY (n+8):	TransmReq (Parameter Protocol)				
		RY (n+9):	TransmRW (Parameter Protocol)				
		RY (n+10):	TransmInit (Parameter Protocol)				
		RY (n+11):	Reserved				
		...					
		RY (n+15):	Reserved				
		Parameter Read and Status Data					
		RWr (n):	Read Data 1 (Parameter Protocol)				
		RWr (n+1):	Read Data 2 (Parameter Protocol)				
		RWr (n+2):	Reserved				
		RWr (n+3):	Status Word				
		Parameter Write Data					
		RWw (n):	Module-Slot (Parameter Protocol)				
		RWw (n+1):	Parameter Index (Parameter Protocol)				
		RWw (n+2):	Write Data 1 (Parameter Protocol)				
		RWw (n+3):	Write Data 2 (Parameter Protocol)				
1315170000	UR20-4DI-P	**Input Datat**					
2009360000	UR20-4DI-P-3W	RX (n):	DI0				
1315350000	UR20-4DI-N	RX (n+1):	DI1				
1550070000	UR20-4DI-2W-230V-AC	RX (n+2):	DI2	2	0	0	0
		RX (n+3):	DI3				
		RX (n+4):	Reserved				
		...					
		RX (n+15):	Reserved				

Process data mapping UR20-FBC-CC

Item No.	Product	Process data mapping		Data width [Byte]			
				RX	RY	RWr	RWw
1315180000	UR20-8DI-P-2W	**Input Data**		2	0	0	0
1394400000	UR20-8DI-P-3W	RX (n):	DI0				
1315190000	UR20-8DI-P-3W-HD	RX (n+1):	DI1				
1315370000	UR20-8DI-N-3W	RX (n+2):	DI2				
2457240000	UR20-8DI-ISO-2W	...					
1938600000	SAI-AU M8 SB 8DI	RX (n+7):	DI7				
1938610000	SAI-AU M12 SB 8DI	RX (n+8):	Reserved				
		...					
		RX (n+15):	Reserved				
1315200000	UR20-16DI-P	**Input Data**		2	0	0	0
1315210000	UR20-16DI-P-PLC-INT	RX (n):	DI0				
1315390000	UR20-16DI-N	RX (n+1):	DI1				
1315400000	UR20-16DI-N-PLC-INT	RX (n+2):	DI2				
		...					
		RX (n+15):	DI15				
1315220000	UR20-4DO-P	**Output Data**		0	2	0	0
1315230000	UR20-4DO-P-2A	RY (n):	DO0				
1394420000	UR20-4DO-PN-2A	RY (n+1):	DO1				
1315410000	UR20-4DO-N	RY (n+2):	DO2				
1315420000	UR20-4DO-N-2A	RY (n+3):	DO3				
2457250000	UR20-4DO-ISO-4A	RY (n+4):	Reserved				
1315540000	UR20-4RO-SSR-255	...					
1315550000	UR20-4RO-CO-255	RY (n+15):	Reserved				
1315240000	UR20-8DO-P	**Output Data**		0	2	0	0
1509830000	UR20-8DO-P-2W-HD	RY (n):	DO0				
1315430000	UR20-8DO-N	RY (n+1):	DO1				
1938660000	SAI-AU M8 SB 8DO 2A	RY (n+2):	DO2				
1938680000	SAI-AU M12 SB 8DO 2A	...					
		RY (n+7):	DO7				
		RY (n+8):	Reserved				
		...					
		RY (n+15):	Reserved				
1315250000	UR20-16DO-P	**Output Data**		0	2	0	0
1315270000	UR20-16DO-P-PLC-INT	RY (n):	DO0				
1315440000	UR20-16DO-N	RY (n+1):	DO1				
1315450000	UR20-16DO-N-PLC-INT	RY (n+2):	DO2				
		...					
		RY (n+15):	DO15				

Process data mapping UR20-FBC-CC

Item No.	Product	Process data mapping		Data width [Byte]			
				RX	RY	RWr	RWw
2456530000	UR20-8DIO-P-3W-DIAG	**Input Data**		2	2	0	0
1938630000	SAI-AU M8 SB 8DIO	RX (n):	DI0				
1938640000	SAI-AU M12 SB 8DIO	RX (n+1):	DI1				
		RX (n+2):	DI2				
		...					
		RX (n+7):	DI7				
		RX (n+8):	Reserved				
		...					
		RX(n+15):	Reserved				
		Output Data					
		RY (n):	DO0				
		RY (n+1):	DO1				
		RY (n+2):	DO2				
		...					
		RY (n+7):	DO7				
		RY (n+8):	Reserved				
		...					
		RY (n+15):	Reserved				
1315600000	UR20-2PWM-PN-0.5A	**Input Data**		0	0	8	16
1315610000	UR20-2PWM-PN-2A	RWr (n):	Status Word Channel 0				
3036960000	UR20-2PWM-PN-0.5A-V2	RWr (n+1):	Status Word Channel 1				
3036950000	UR20-2PWM-PN-2A-V2	RWr (n+2):	Reserved				
		RWr (n+3):	Reserved				
		Output Data					
		RWw (n, n+1):	Pulse duration Channel 0				
		RWw (n+2, n+3):	Pulse duration Channel 1				
		RWw (n+4):	Control Word Channel 0				
		RWw (n+5):	Control Word Channel 1				
		RWw (n+6):	Reserved				
		RWW (n+7):	Reserved				
2697910000	UR20-2PWM-I-2.5A-2DI-P	**Input Data**		0	0	8	8
		RWr (n):	Status DI and internal temperature				
		RWr (n+1):	Supply voltage				
		RWr (n+2):	Value Channel 2				
		RWr (n+3):	Value Channel 3				
		Output Data					
		RWw (n):	Target value Channel 2				
		RWw (n+1):	Target value Channel 3				
		RWw (n+2):	Release value Channel 2 and Channel 3				
		RWw (n+3):	Reserved				

Process data mapping UR20-FBC-CC

Item No.	Product	Process data mapping		Data width [Byte]			
				RX	RY	RWr	RWw
2489830000	UR20-1SM-50W-6DI2DO-P	**Input Data**		0	0	16	16
		RWr (n, n+1):	Current position				
		RWr (n+2):	Current velocity				
		RWr (n+3):	Reserved				
		RWr (n+4):	State DIO / Stepper Motor				
		RWr (n+5):	Register Address / Register Access Control				
		RWr (n+6, n+7):	Register Read Data				
		Output Data					
		RWw (n, n+1):	Target position				
		RWw (n+2):	Target velocity				
		RWw (n+3):	Target acceleration				
		RWw (n+4):	Moving control				
		RWw (n+5):	Register Address /Register Access Control				
		RWw (n+6, n+7):	Register Write Data				
2705620000	UR20-2AI-UI-16	**Input Data**		0	0	4	0
2566090000	UR20-2AI-UI-16-DIAG	RWr (n):	AI0				
		RWr (n+1):	AI1				
1315620000	UR20-4AI-UI-16	**Input Data**		0	0	8	0
2566960000	UR20-4AI-UI-ISO-16-DIAG	RWr (n):	AI0				
1315690000	UR20-4AI-UI-16-DIAG	RWr (n+1):	AI1				
1993880000	UR20-4AI-UI-DIF-16-DIAG	RWr (n+2):	AI2				
1506920000	UR20-4AI-UI-16-HD	RWr (n+3):	AI3				
1506910000	UR20-4AI-UI-16-DIAG-HD						
1394390000	UR20-4AI-UI-12						
2001670000	UR20-4AI-R-HS-16-DIAG						
1938690000	SAI-AU M12 SB 4AI						
2544660000	UR20-4AI-UI-DIF-32-DIAG	**Input Data**		0	0	16	0
1315650000	UR20-8AI-I-16-HD	RWr (n):	AI0 / RTD 0				
1315720000	UR20-8AI-I-16-DIAG-HD	RWr (n+1):	AI1 / RTD 1				
1315670000	UR20-8AI-I-PLC-INT	RWr (n+2):	AI2 / RTD 2				
2555940000	UR20-8AI-RTD-DIAG-2W	RWr (n+3):	AI3 / RTD 3				
1529370000	UR20-8AI-I-16-DIAG	RWr (n+4):	AI4 / RTD 4				
		RWr (n+5):	AI5 / RTD 5				
		RWr (n+6):	AI6 / RTD 6				
		RWr (n+7):	AI7 / RTD 7				

Process data mapping UR20-FBC-CC

Item No.	Product	Process data mapping		Data width [Byte]			
				RX	RY	RWr	RWw
1315700000	UR20-4AI-RTD-DIAG	**Input Data**		0	0	8	0
2456540000	UR20-4AI-RTD-HP-DIAG	RWr (n):	RTD0 / TC0				
1315710000	UR20-4AI-TC-DIAG	RWr (n+1):	RTD0 / TC1				
1938710000	SAI-AU M12 SB 4PT100	RWr (n+2):	RTD0 / TC2				
1938720000	SAI-AU M12 SB 4THERM0	RWr (n+3):	RTD0 / TC3				
3039320000	UR20-15AI-U-16-DIAG	**Input Data**		0	0	10	2
		RWr (n):	Mailbox data, Word 0				
		RWr (n+1):	Mailbox data, Word 1				
		RWr (n+2):	Mailbox data, Word 2				
		RWr (n+3):	Mailbox data, Word 3				
		RWr (n+4):	Status Word				
		Output Data					
		RWw (n):	Control Word				
1990070000	UR20-2AI-SG-24-DIAG	**Input Data**		0	0	16	16
		RWr (n, n+1):	AI0 Input Value				
		RWr (n+2, n+3):	AI1 Input Value				
		RWr (n+4):	Status Word (DI0/DI1 Status)				
		RWr (n+5):	Reserved				
		...					
		RWr (n+7):	Reserved				
		Output Data					
		RWw (n, n+1):	AO0 manual tare value				
		RWw (n+2, n+3):	AO1 manual tare value				
		RWw (n+4):	Control Word (AI0/AI1 Tare Config)				
		RWw (n+5):	Reserved				
		...					
		RWw (n+7):	Reserved				

Process data mapping UR20-FBC-CC

Item No.	Product	Process data mapping		Data width [Byte]			
				RX	RY	RWr	RWw
2007420000	UR20-3EM-230V-AC	**Input Data**					
		RWr (n):	Channel 0				
		RWr (n+1):	Channel 1				
		RWr (n+2):	Channel 2				
		...					
		RWr (n+7):	Channel 7	0	0	16	16
		Output Data					
		RWw (n):	Counter Reset / Key for counter Reset				
		RWw (n+1):	Reserved				
		...					
		RWw (n+7):	Reserved				
2920830000	UR20-3EM-400V-AC-CT1A	**Input Data**					
2920840000	UR20-3EM-400V-AC-CT5A	RWr (n):	Channel 0				
2920850000	UR20-3EM-400V-AC-RC	RWr (n+1):	Channel 1				
2920860000	UR20-3EM-400V-AC-333mV	RWr (n+2):	Channel 2				
		...					
		RWr (n+7):	Channel 7	0	0	32	8
		Output Data					
		RWw (n):	Counter Reset / Key for counter Reset				
		RWw (n+1):	Reserved				
		...					
		RWw (n+7):	Reserved				
2705630000	UR20-2AO-UI-16	**Output Data**					
2566100000	UR20-2AO-UI-16-DIAG	RWw (n):	AO0	0	0	0	4
		RWw (n+1):	AO1				
2566970000	UR20-2AO-UI-ISO-16-DIAG	**Output Data**					
1315680000	UR20-4AO-UI-16						
2453880000	UR20-4AO-UI-16-M	RWw (n):	AO0				
1315730000	UR20-4AO-UI-16-DIAG	RWw (n+1):	AO1				
2453870000	UR20-4AO-UI-16-M-DIAG	RWw (n+2):	AO2	0	0	0	8
1510690000	UR20-4AO-UI-16-HD	RWw (n+3):	AO3				
1506930000	UR20-4AO-UI-16-DIAG-HD						
1938700000	SAI-AU M12 SB 4AO						

Process data mapping UR20-FBC-CC

Item No.	Product	Process data mapping		Data width [Byte]			
				RX	RY	RWr	RWw
1315570000	UR20-1CNT-100-1DO	**Input Data**		0	0	16	16
		RWr (n, n+1):	Counter Value				
		RWr (n+2, n+3):	Latch Value				
		RWr (n+4):	Counter Status				
		RWr (n+5):	Timestamp				
		RWr (n+6):	Reserved				
		RWr (n+7):	Reserved				
		Output Data					
		RWw (n, n+1):	Comparison Value				
		RWw (n+2, n+3):	Set Value				
		RWw (n+4):	Control Word				
		RWw (n+5):	Reserved				
		...					
		RWw (n+7):	Reserved				
1315590000	UR20-2CNT-100	**Input Data**		0	0	16	16
		RWr (n, n+1):	Counter Value 0				
		RWr (n+2, n+3):	Counter Value 1				
		RWr (n+4):	Counter Status 0				
		RWr (n+5):	Counter Status 1				
		RWr (n+6):	Reserved				
		RWr (n+7):	Reserved				
		Output Data					
		RWw (n, n+1):	Comparison Value Counter 0				
		RWw (n+2, n+3):	Comparison Value Counter 1				
		RWw (n+4):	Control Word Counter 0				
		RWw (n+5):	Control Word Counter 1				
		RWw (n+6):	Reserved				
		RWw (n+7):	Reserved				
1315580000	UR20-1CNT-500	**Input Data**		0	0	8	16
		RWr (n, n+1):	Counter Value				
		RWr (n+2):	Counter Status				
		RWr (n+3):	Timestamp				
		Output Data					
		RWw (n, n+1):	Comparison Value				
		RWw (n+2, n+3):	Set Value				
		RWw (n+4):	Control Word				
		RWw (n+5):	Reserved				
		...					
		RWw (n+7):	Reserved				

Process data mapping UR20-FBC-CC

Item No.	Product	Process data mapping		Data width [Byte]			
				RX	RY	RWr	RWw
1508080000	UR20-2FCNT-100	**Input Data**		0	0	24	16
		RWr (n, n+1):	Current measured period Channel 0				
		RWr (n+2, n+3):	Rising edges period Channel 0				
		RWr (n+4, n+5):	Current measured period Channel 1				
		RWr (n+6, n+7):	Rising edges period Channel 1				
		RWr (n+8):	Channel Status 0				
		RWr (n+9):	Channel Status 1				
		RWr (n+10):	Reserved				
		RWr (n+11):	Reserved				
		Output Data					
		RWw (n, n+1):	Measurement cycle period Channel 0				
		RWw (n+2, n+3):	Measurement cycle period Channel 1				
		RWw (n+4):	Control Word Channel 0				
		RWw (n+5):	Control Word Channel 1				
		RWw (n+6):	Reserved				
		RWw (n+7):	Reserved				
1508090000	UR20-1SSI	**Input Data**		0	0	8	0
		RWr (n, n+1):	Encoder value				
		RWr (n+2):	16 Bit time stamp				
		RWr (n+3):	Reserved				
1315750000	UR20-1COM-232-485-422	**Input Data**		0	0	16	16
		RWr (n):	Status Word				
		RWr (n+1 ... n+7):	Received data				
		Output Data					
		RWw (n):	Status Word				
		RWw (n+1 ... n+7):	Transmission data				
2826800000	UR20-1COM-232-485-422-V2	**Input Data**		0	0	19	19
		RWr (n):	Status Word				
		RWr (n+1 ... n+7):	Received data				
		Output Data					
		RWw (n):	Status Word				
		RWw (n+1 ... n+7):	Transmission data				
2007430000 3116480000	UR20-1COM-SAI-PRO UR20-1COM-SAI-PRO-V2	The UR20-1COM-SAI-PRO acts similar to an empty module and does not provide I/O data. The connected subbus modules are mapped like u-remote based I/O modules, each with its own u-remote slot.		0	0	0	0
2489840000	UR20-1COM-CANOPEN	**Input Data**		0	0	3 – 128	3 – 128
		RWr (n):	Status Word and information about data length				
		RWr (n+1, ...):	Process data				
		Output Data					
		RWw (n):	Control Word and information about data length				
		Device					

Process data mapping UR20-FBC-CC

Item No.	Product	Process data mapping		Data width [Byte]			
				RX	RY	RWr	RWw
3040800000	UR20-1COM-CAN	**Input Data**		0	0	8, 16, 24 ... 128	8, 16, 24 ... 128
		RWr (n):	Status Word and information about data length				
		RWr (n+1, ...):	Process data				
		Output Data					
		RWw (n):	Control Word and information about data length				
		Device					
1938730000	SAI-AU M12 SB 2CNT	**Input Data**		0	0	16	8
		RWr (n, n+1):	Counter Value 0				
		RWr (n+2, n+3):	Counter Value 1				
		RWr (n+4):	Overload Status/Status Counter 0				
		RWr (n+5):	Status Counter 1				
		RWr (n+6, n+7):	Reserved				
		Output Data					
		RWw (n, n+1):	Control Value Counter 0/1				
		RWw (n+2):	Control Bytes Counter 0/1				
		RWw (n+3):	Reserved				
1315740000	UR20-4COM-IO-LINK	**Input Data**		0	0	16/24/32/.../136	16/24/32/.../136
2819690000	UR20-4COM-IO-LINK-V2	RWr (n):	IO-Link Device Status Channel 1... 4				
		RWr (n+1,...):	I/O Link Input Data				
		Output Data					
		RWw (n):	IO-Link Device Control Channel 1... 4				
		RWr (n+1,...):	I/O Link Device Output Data				

Process data mapping UR20-FBC-CC

Item No.	Product	Process data mapping	Data width [Byte]			
			RX	RY	RWr	RWw
2742570000	UR20-4DI-4DO-PN-FSCC	**Input data**				
		SA\X (n): DI0				
		SA\X (n + 1): DI1				
		SA\X (n + 2): DI2				
		SA\X (n + 3): DI3				
		SA\X (n + 4): DO0 Status				
		SA\X (n + 5): DO1 Status				
		SA\X (n + 6): DO2 Status				
		SA\X (n + 7): DO3 Status				
		SA\X (n + 8): Reserved				
		...				
		SA\X (n + 31): Reserved	4	4	8	8
		RWr (n): Error Code				
		RWr (n + 1): Detailed error code				
		RWr (n + 2): Reserved				
		RWr (n + 3): Reserved				
		Output Data				
		SA\X (n): DO0				
		SA\X (n + 1): DO1				
		SA\X (n + 2): DO2				
		SA\X (n + 3): DO3				
		SA\X (n + 4): Reserved				
		...				
		SA\X (n + 31): Reserved				
		RWw (n): Savety activation				
		RWw (n + 1): Reserved	4	4	8	8
		...				
		RWw (n + 3): Reserved				

Process data mapping UR20-FBC-CC

Item No.	Product	Process data mapping	Data width [Byte]			
			RX	RY	RWr	RWw
2742580000	UR20-8DI-PN-FSCC	**Input Data**				
		SA\X (n): DI0				
		SA\X (n + 1): DI1				
		SA\X (n + 2): DI2				
		SA\X (n + 3): DI3				
		SA\X (n + 4): DI4				
		SA\X (n + 5): DI5				
		SA\X (n + 6): DI6				
		SA\X (n + 7): DI7				
		SA\X (n + 8): Reserved				
		...	4	0	8	8
		SA\X (n + 31): Reserved				
		RWr (n): Error Code				
		RWr (n + 1): Detailed error code				
		RWr (n + 2): Reserved				
		RWr (n + 3): Reserved				
		Output Data				
		RWw (n): Savety activation				
		RWw (n + 1): Reserved				
		...				
		RWw (n + 3): Reserved				

Process data mapping UR20-FBC-CC

Item No.	Product	Process data mapping		Data width [Byte]			
				RX	RY	RWr	RWw
1335030000	UR20-PF-O-1DI-SIL	**Input Data**		4	0	0	0
1335040000	UR20-PF-O-2DI-DELAY-SIL	RX (n):	Safety input 0				
1335050000	UR20-PF-O-2DI-SIL	RX (n+1):	Reserved / Safety input 1				
		RX (n+2):	Automatic start				
		RX (n+3):	Manual start				
		RX (n+4):	Safety input 0, channel 1				
		RX (n+5):	Safety input 0, channel 2				
		RX (n+6):	Reserved / Safety input 1, channel 1				
		RX (n+7):	Reserved / Safety input 1, channel 2				
		RX (n+8):	24 V Safe output				
		RX (n+9):	Reserved / SS1 output				
		RX (n+10):	24 V DC feed-in				
		RX (n+11):	Reserved				
		...					
		RX (n+24):	Reserved / DIP-Switch configuration Safe Input0				
		RX (n+25):	Reserved / DIP-Switch configuration Safe Input0				
		RX (n+26):	Reserved / DIP-Switch configuration Safe Output				
		RX (n+27):	Reserved / DIP-Switch configuration Safe Output				
		...					
		RX (n+31):	Reserved				

UR20-FBC-CC Alarm message protocol

4. The UR20-FBC-CC cyclic process data indicate alarm message events. Please refer to the process data mapping table.
5. The PLC reads each alarm message dependent on the cyclic alarm bits as follows: diagnostic alarm, process alarm, pull alarm and plug alarm event (see table process data mapping).

PLC reads diagnostic alarm

	Command No.	Len	Msg ID	Slot	Res	Data
RDMSG Request	0x2008	0x35	0x01	0xFF	0xFF	
RDMSG Response	0x2008	0x35	0x01	0x01	0xFF	47 Byte Diagnosis Alarm

PLC reads process alarm

	Command No.	Len	Msg ID	Slot	Res	Data
RDMSG Request	0x2008	0x0A	0x02	0xFF	0xFF	
RDMSG Response	0x2008	0x0A	0x02	0x01	0xFF	4 Byte Process Alarm

PLC reads pull alarm

	Command No.	Len	Msg ID	Slot	Res	Data
RDMSG Request	0x2008	0x06	0x03	0xFF	0xFF	
RDMSG Response	0x2008	0x06	0x03	0x01	0xFF	–

PLC reads plug alarm

	Command No.	Len	Msg ID	Slot	Res	Data
RDMSG Request	0x2008	0x06	0x04	0xFF	0xFF	
RDMSG Response	0x2008	0x06	0x04	0x01	0xFF	–

Fieldbus coupler answers with error message (0xFF), if unknown Command No. is requested.

	Command No.
RDMSG Response	0xFFFF

Fieldbus coupler answers with error message, if Len, Msg ID, Slot and Seq is wrong or no alarm is pending.

	Command No.	Len	Msg ID	Slot	Res	Data
RDMSG Response	0x2008	Requested Length	0xFF	0xFF	0xFF	(Requested Length – 6) bytes 0xFF

Legend

Slot	UR20 module number (where event occured)	
	0x00	Coupler
	0x01 ... 0x40	Module slot
	0xFF	Request
Msg ID	Message identifier	
	0x01	Diagnosis alarm
	0x02	Process alarm
	0x03	Pull alarm
	0x04	Plug alarm
	0xFF	Request
Len	Message length (header and data)	
	Request	Message length of request
	Response	Message length of response
Res	Reserved for future use = allways 0xFF	
Data	Message Data – 47 Bytes diagnosis data, see diagnostic data table within each module description in chapter 6 – 4 Bytes process alarm, see process data tables within each module description in chapter 6	

Byte order in GX Works3

When using hexadecimal notation in GX Works3, the byte order of alarm message protocol items must be swapped. The byte order must be swapped for both request items and response items.

Example „PLC reads diagnostic alarm" (ST)

```
...
S_2[0] := 16#0820        // Command No. (swapped)
S_2[1] := 16#0135        // Msg ID and Len (swapped)
S_2[2] := 16#FFFF        // Res and Slot (swapped)
...

bool := G_RDMSG(bool, address, S_1, S_2, D_1, D_2)
```

5.12 CC-Link IE TSN fieldbus coupler

CC-Link IE TSN

The UR20-FBC-CC-TSN fieldbus coupler is a Remote Station (CC-Link IE TSN slave) according to the CC-Link IE TSN specification. The coupler enables the CC-Link IE TSN specific communication and related services according to Authentication Class A and Class B.
The coupler is the head module for the u-remote system bus, to which up to 64 active u-remote modules can be connected. The coupler is connected to the CC-Link IE TSN fieldbus via Ethernet. The two Ethernet ports form an unmanaged 2-port switch that supports a line network structure.
The coupler can exchange I/O data with a CC-Link IE TSN master. Diagnostics and alarms are exchanged via the alarm message protocol (SLMP).
The coupler can be accessed with a system-independent web server application via the USB service interface or the Ethernet. Thus, all information, such as diagnostics, status values and parameters, can be read and all connected modules can be simulated or forced.
The station's main power supply is integrated in the coupler. Power is supplied via two 4-pole connectors, separated into the input and output current paths.

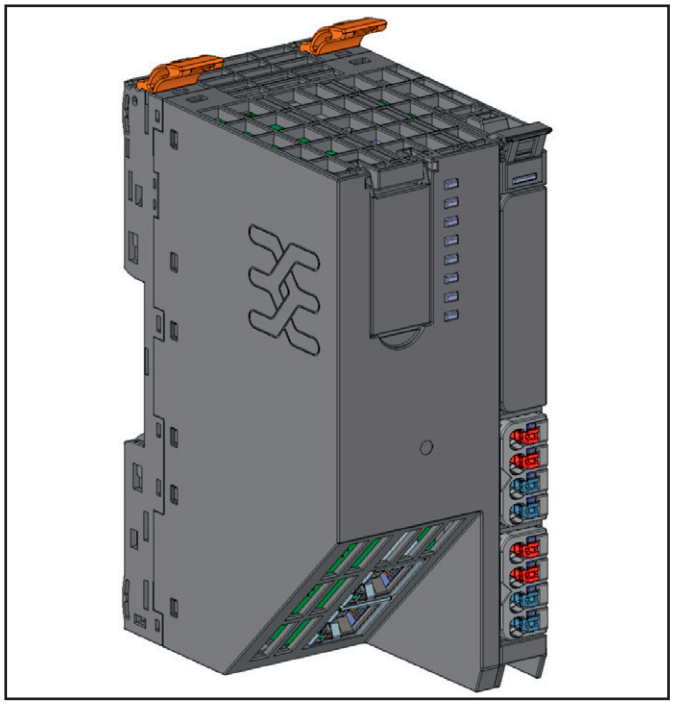

Fieldbus coupler UR20-FBC-CC-TSN (Item No. 2680260000)

Status indicators

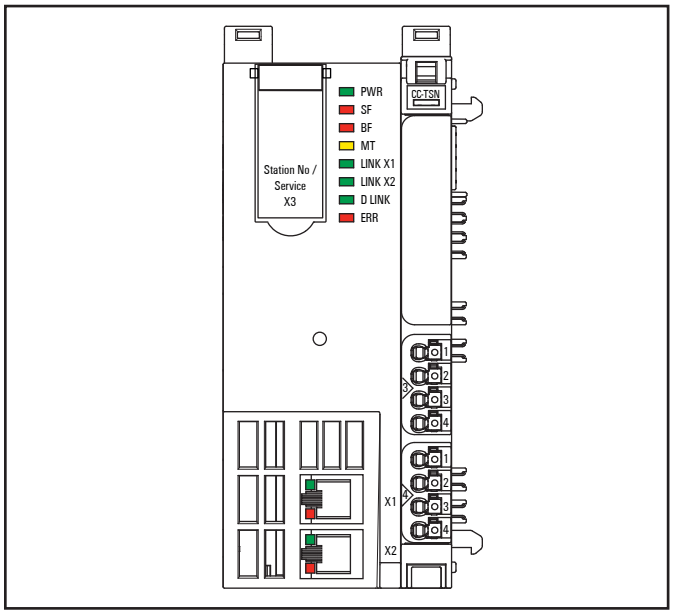

LED status indicators UR20-FBC-CC-TSN, troubleshooting see chapter 12

PWR	Power LED	**Green**: Supply voltage connected **Red:** Coupler not yet started completely or hardware error
SF	Collective error	**Red:** Configuration error, or error in the coupler, or error in a module, or there is a new diagnostic message **Red flashing**: Station in Force mode
BF	Bus failure	**Red:** No connection to the fieldbus **Red flashing**: Configuration error, no connection to the control unit, or error in the parameter set or slave address error or firmware update is running
MT	Maintenance	**Yellow**: Error on the system bus or fieldbus
LINK X1	Connection	**Green**: Connection established between port 1 of the coupler and another field device **Off:** No connection
LINK X2	Connection	**Green**: Connection established between port 2 of the coupler and another field device **Off:** No connection
D LINK	Data transmission	**Green flashing**: Cyclic transmission stopped **Green**: Cyclic transmission running **Off**: No cyclic transmission established
ERR	Error	**Red flashing**: Minor error occurred **Red**: Moderate error or major error occurred **Off**: No error
X1/X2	Green LED	**Green**: Connection established between port 1/2 of the coupler and another field device **Off:** No connection
	Red LED	**Red:** Invalid data received or loopback in progress **Off:** Valid data received and loopback not performed

Addressing

An address between 0 and 254 can be set for the fieldbus coupler using the DIP-switches. The address is recognized during power up of the coupler.

Each address may be assigned only **once** in the overall bus structure. The default setting is 0. By default, the UR20-FBC-CC-TSN device expects to change the IP address using an engineering tool or the web server.

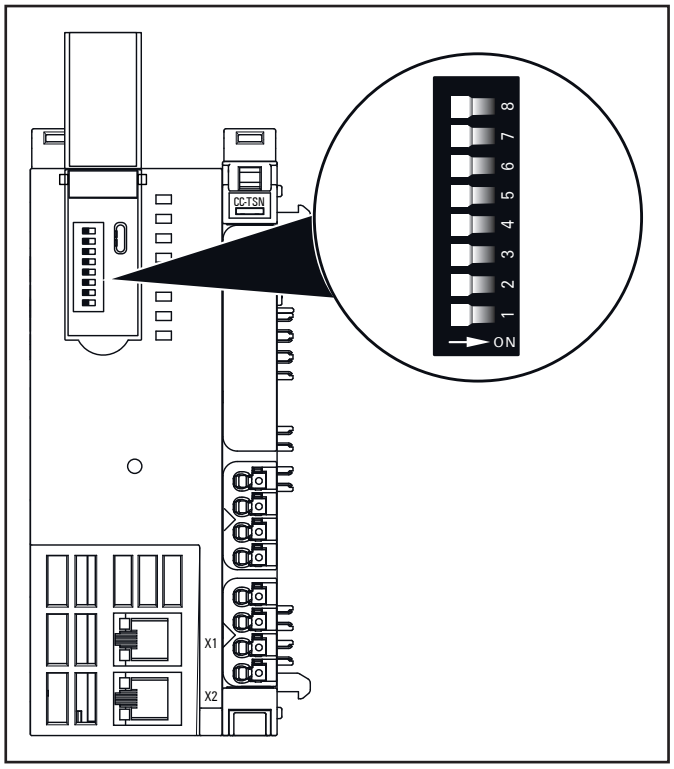

Default setting UR20-FBC-CC-TSN: Address = 0

► Use the DIP-switches to set the station address in binary code.

Values of the DIP-switches

1	2	3	4	5	6	7	8
2^0	2^1	2^2	2^3	2^4	2^5	2^6	2^7
1	2	4	8	16	32	64	128

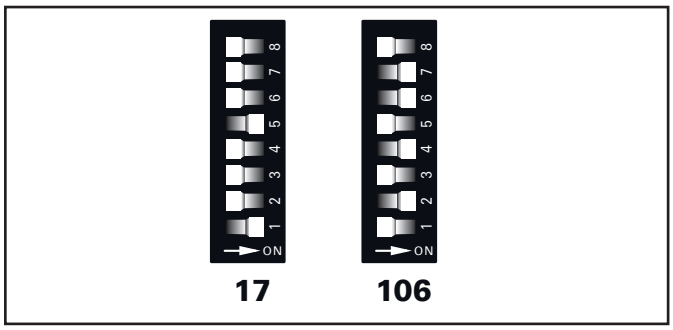

Examples for addressing the UR20-FBC-CC-TSN

CC-Link IE TSN address **17**:
DIP-switches 1 and 5 ON = 1 + 16 = 17
CC-Link IE TSN address **106**:
DIP-switches 2, 4, 6 and 7 ON= 2 + 8 + 32 + 64 = 106

Changing the address

► Set the desired address.
► Restart the coupler.

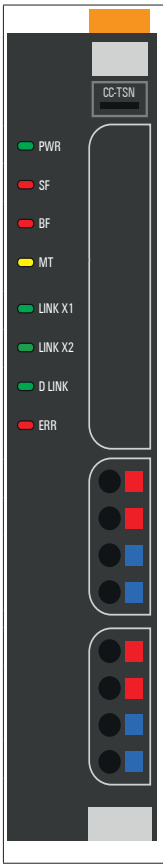

	Coupler power supply LED green: supply voltage >18 V red: at least one current path <18 V
3.1	Green: Input current path supply voltage > 18 V DC
3.2	Red: Input current path supply voltage < 18 V DC
4.1	Green: Output current path supply voltage > 18 V DC
4.2	Red: Output current path supply voltage < 18 V DC

LED indicators UR20-FBC-CC-TSN, troubleshooting see chapter 12

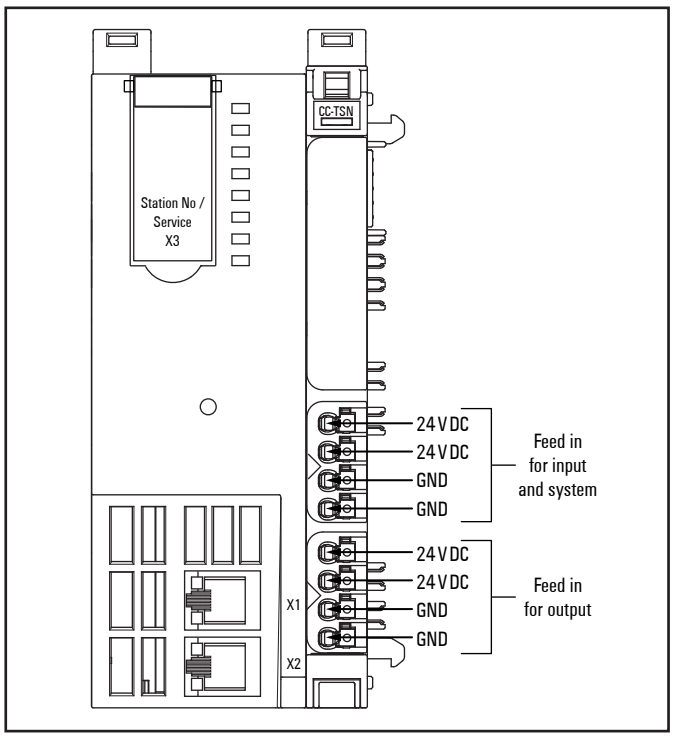

Connection diagram UR20-FBC-CC-TSN

ATTENTION

Risk of material damage!

In the case of a maximum power supply of >8 A and a maximum temperature of >+55 °C, all four contacts must be connected with 1.5 mm² wiring!

Pin assignment of the Ethernet ports X1 and X2

Pin	Signal	Description
1	A+	Bidirectional, differential pair A positive
2	A–	Bidirectional, differential pair A negative
3	B+	Bidirectional, differential pair B positive
4	C+	Bidirectional, differential pair C positive
5	C–	Bidirectional, differential pair C negative
6	B–	Bidirectional, differential pair B negative
7	D+	Bidirectional, differential pair D positive
8	D–	Bidirectional, differential pair D negative

Always use CC-Link compliant cables for the fieldbus wiring.

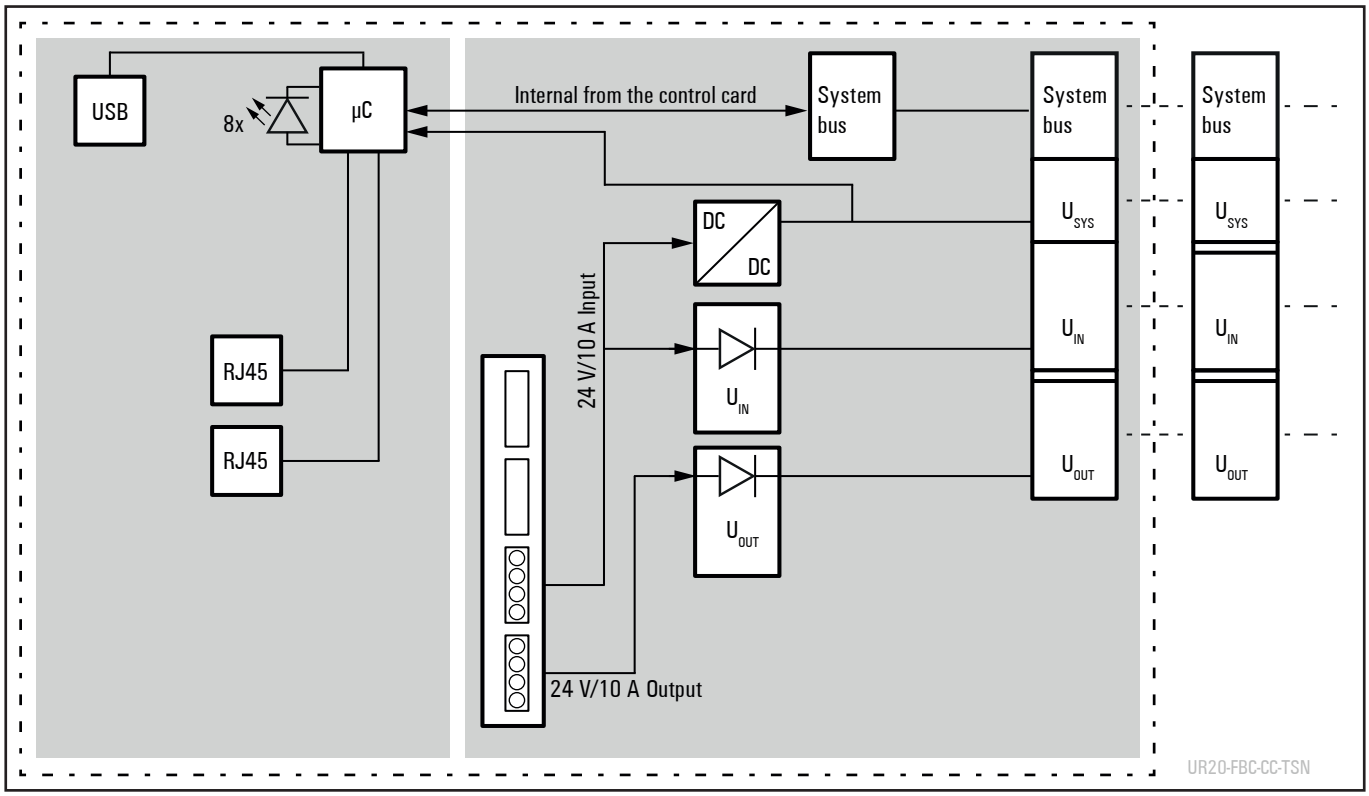

Block diagram UR20-FBC-CC-TSN

Technical data UR20-FBC-CC-TSN (Item No. 2680260000)

System data		
Connection	2 x RJ45	
Fieldbus protocol	CC-Link IE TSN	
Input data width	max. 1024 Bytes	
Output data width	max. 1024 Bytes	
Parameter data	max. 64 x 64 Byte	
Diagnostic data	max. 64 x 47 Byte	
Number of modules	max. 64 active	
Configuration interface	Micro USB 2.0	
Transfer rate	Fieldbus	max. 1 GBit/s
	u-remote system bus	max. 48 Mbit/s
Fieldbus		
Station type	Remote Station	
Device type	Digital/Analogue I/O	
Supply		
Supply voltage for system and inputs	24 V DC +20% / -15%	
Supply voltage for outputs	24 V DC +20% / -15%	
Feed-in current[1] for input modules	max. 10 A	
Feed-in current[1] for output modules	max. 10 A	
Current consumption from system current path I_{sys}	140 mA	
Temperature data[1]		
Operation	Operation (horizontal installation)	-20 °C to +60 °C / -4 °F ... +140 °F (2 x 10 A power supply)
	Operation (vertical installation)	-20 °C to +55 °C / -4 °F ... +131 °F (2 x 8 A power supply)
Storage, transport		-40 °C to +85 °C / -40 °F ... +185 °F
Connection data		
Type of connection	„PUSH IN“	
Conductor cross-section	Single-wired, fine-wired	0.14 ... 1.5 mm² (AWG 16 ... 26)
Weight		
Weight (operational status)	210 g	
General data, see Section 3.2		

1) Restrictions for the use in potentially explosive atmosphere: Only horizontal installation and max. 8 A power supply!

Overview of editable parameters UR20-FBC-CC-TSN

Parameter	Optional values	Default
IP address	4 numbers between 0 and 255	192.168.0.202
Subnet mask	4 numbers between 0 and 255	255.255.255.0
Webserver über Ethernet	disabled / enabled	disabled
IP address USB port	192.168.1.202, 192.168.2.202, 192.168.3.202 ... 192.168.20.202	192.168.1.202
Communication speed	1 Gbps / 100 Mbps	1 Gbps
CC-Link IE TSN Class	Class B / Class A	Class B
Process alarm	disabled / enabled	disabled
Diagnostic alarm	disabled / enabled	disabled
HTTPS setting	HTTP & HTTPS concurrent operation / only HTTPS; no HTTP	HTTP & HTTPS concurrent operation
Output behaviour on fieldbus error	All outputs off / Enable substitute value / Hold last value	All outputs off
Module behaviour on hot swap	Continue data exchange / Behaviour as with fieldbus error	Continue data exchange
Data format	Motorola / Intel	Intel

Coupler status bits UR20-FBC-CC-TSN

Bit	Name	Meaning
0	Summarized module diagnosis	Module diagnostic is present. A diagnosis is available for at least one module with diagnostics functionality.
1	Station pending	More than one electronic unit or module has been removed from the station.
2	Errorbit 2	Reserve bit 2, currently not used
3	Systembus error	Error on the system bus. Communication with the connected modules is disrupted.
4	Communication speed	Communication speed setting status, OFF (0) = 1 Gbps, ON (1) = 100 Mbps
5	CC-Link IE TSN Class	CC-Link IE TSN Class setting status, OFF (0) = Class B, IN (1) = Class A
6	I/O-Configuration error	Deviation in the configuration. The module list has changed after bootup.
7	Module parameter error	Mismatch of parameter list (parameter auto-setting configuration) and connected modules
8	Errorbit 8	Reserve bit 8, currently not used
9	Errorbit 9	Reserve bit 9, currently not used
10	Force mode active	Force mode was activated through the web server.
11	Errorbit 11	Reserve bit 11, currently not used
12	Errorbit 12	Reserve bit 12, currently not used
13	Voltage U_{OUT} error	Error in the supply voltage of outputs
14	Voltage U_{IN} error	Error in the supply voltage of system and inputs
15	IO-Link diagnosis	A diagnosis is present on an IO-Link device.

Process data mapping UR20-FBC-CC-TSN

Item No.	Product	Process data mapping		Data width [Byte]			
				RX	RY	RWr	RWw
2680260000	UR20-FBC-CC-TSN	**Status/Diagnostic Data**		2	2	8	8
		RX (n):	Diagnosis Alarm event notify				
		RX (n+1):	Process Alarm event notify				
		RX (n+2):	Pull Alarm event notify				
		RX (n+3):	Plug Alarm event notify				
		RX (n+4):	Reserved				
		...					
		RX (n+15):	Reserved				
		Write Data					
		RY (n):	Reserved				
		...					
		RY (n+15):	Reserved				
		Status Data					
		RWr (n):	Reserved				
		RWr (n+1):	Reserved				
		RWr (n+2):	Reserved				
		RWr (n+3):	Status Word				
		Write Data					
		RWw (n):	Reserved				
		RWw (n+1):	Reserved				
		RWw (n+2):	Reserved				
		RWw (n+3):	Reserved				
1315170000	UR20-4DI-P	**Input Datat**		2	0	0	0
2009360000	UR20-4DI-P-3W	RX (n):	DI0				
1315350000	UR20-4DI-N	RX (n+1):	DI1				
1550070000	UR20-4DI-2W-230V-AC	RX (n+2):	DI2				
		RX (n+3):	DI3				
		RX (n+4):	Reserved				
		...					
		RX (n+15):	Reserved				
1315180000	UR20-8DI-P-2W	**Input Data**		2	0	0	0
1394400000	UR20-8DI-P-3W	RX (n):	DI0				
1315190000	UR20-8DI-P-3W-HD	RX (n+1):	DI1				
1315370000	UR20-8DI-N-3W	RX (n+2):	DI2				
2457240000	UR20-8DI-ISO-2W	...					
1938600000	SAI-AU M8 SB 8DI	RX (n+7):	DI7				
1938610000	SAI-AU M12 SB 8DI	RX (n+8):	Reserved				
		...					
		RX (n+15):	Reserved				

1) The process data of the time stamp modules (UR20-...-TS) are not synchronised in the entire CC-Link-IE-TSN network, but only locally within the u-remote station.

Process data mapping UR20-FBC-CC-TSN

Item No.	Product	Process data mapping		Data width [Byte]			
				RX	RY	RWr	RWw
1315200000	UR20-16DI-P	**Input Data**		2	0	0	0
1315210000	UR20-16DI-P-PLC-INT	RX (n):	DI0				
1315390000	UR20-16DI-N	RX (n+1):	DI1				
1315400000	UR20-16DI-N-PLC-INT	RX (n+2):	DI2				
		...					
		RX (n+15):	DI15				
1460140000	UR20-2DI-P-TS[1)]	**Input Data**		0	0	64	0
		RWr (n):	Byte 0: Input image 1 (Bit 0 = DI0, Bit 1 = DI1, Bit 2 ... 7 reserved) Byte 1: Running number (0 ... 127 rotating)				
		RWr (n+1):	Time stamp 1 (0 ... 65535 µs rotating)				
		...					
		RWr (n+28):	Byte 0: Input image 15 (Bit 0 = DI0, Bit 1 = DI1, Bit 2 ... 7 reserved) Byte 1: Running number (0 ... 127 rotating)				
		RWr (n+29):	Time stamp 15 (0 ... 65535 µs rotating)				
		RWr (n+30):	Reserved				
		RWr (n+31):	Reserved				
1460150000	UR20-4DI-P-TS[1)]	**Input Data**		0	0	64	0
		RWr (n):	Byte 0: Input image 1 (Bit 0 = DI0 ... Bit 3 = DI3, Bit 4 ... 7 reserved) Byte 1: Running number (0 ... 127 rotating)				
		RWr (n+1):	Time stamp 1 (0 ... 65535 µs rotating)				
		...					
		RWr (n+28):	Byte 0: Input image 15 (Bit 0 = DI0 ... Bit 3 = DI3, Bit 4 ... 7 reserved) Byte 1: Running number (0 ... 127 rotating)				
		RWr (n+29):	Time stamp 15 (0 ... 65535 µs rotating)				
		RWr (n+30):	Reserved				
		RWr (n+31):	Reserved				
1315220000	UR20-4DO-P	**Output Data**		0	2	0	0
1315230000	UR20-4DO-P-2A	RY (n):	DO0				
1394420000	UR20-4DO-PN-2A	RY (n+1):	DO1				
1315410000	UR20-4DO-N	RY (n+2):	DO2				
1315420000	UR20-4DO-N-2A	RY (n+3):	DO3				
2457250000	UR20-4DO-ISO-4A	RY (n+4):	Reserved				
1315540000	UR20-4RO-SSR-255	...					
1315550000	UR20-4RO-CO-255	RY (n+15):	Reserved				

1) The process data of the time stamp modules (UR20-...-TS) are not synchronised in the entire CC-Link-IE-TSN network, but only locally within the u-remote station.

Process data mapping UR20-FBC-CC-TSN

Item No.	Product	Process data mapping		Data width [Byte]			
				RX	RY	RWr	RWw
1315240000	UR20-8DO-P	**Output Data**					
1509830000	UR20-8DO-P-2W-HD	RY (n):	DO0				
1315430000	UR20-8DO-N	RY (n+1):	DO1				
1938660000	SAI-AU M8 SB 8DO 2A	RY (n+2):	DO2				
1938680000	SAI-AU M12 SB 8DO 2A	...		0	2	0	0
		RY (n+7):	DO7				
		RY (n+8):	Reserved				
		...					
		RY (n+15):	Reserved				
1315250000	UR20-16DO-P	**Output Data**					
1315270000	UR20-16DO-P-PLC-INT	RY (n):	DO0				
1315440000	UR20-16DO-N	RY (n+1):	DO1				
1315450000	UR20-16DO-N-PLC-INT	RY (n+2):	DO2	0	2	0	0
		...					
		RY (n+15):	DO15				
2456530000	UR20-8DIO-P-3W-DIAG	**Input Data**					
1938630000	SAI-AU M8 SB 8DIO	RX (n):	DI0				
1938640000	SAI-AU M12 SB 8DIO	RX (n+1):	DI1				
		RX (n+2):	DI2				
		...					
		RX (n+7):	DI7				
		RX (n+8):	Reserved				
		...					
		RX(n+15):	Reserved				
		Output Data		2	2	0	0
		RY (n):	DO0				
		RY (n+1):	DO1				
		RY (n+2):	DO2				
		...					
		RY (n+7):	DO7				
		RY (n+8):	Reserved				
		...					
		RY (n+15):	Reserved				

1) The process data of the time stamp modules (UR20-...-TS) are not synchronised in the entire CC-Link-IE-TSN network, but only locally within the u-remote station.

Process data mapping UR20-FBC-CC-TSN

Item No.	Product	Process data mapping		Data width [Byte]			
				RX	RY	RWr	RWw
1315600000	UR20-2PWM-PN-0.5A	**Input Data**		0	0	8	16
1315610000	UR20-2PWM-PN-2A	RWr (n):	Status Word Channel 0				
		RWr (n+1):	Status Word Channel 1				
		RWr (n+2):	Reserved				
		RWr (n+3):	Reserved				
		Output Data					
		RWw (n, n+1):	Pulse duration Channel 0				
		RWw (n+2, n+3):	Pulse duration Channel 1				
		RWw (n+4):	Control Word Channel 0				
		RWw (n+5):	Control Word Channel 1				
		RWw (n+6):	Reserved				
		RWW (n+7):	Reserved				
2697910000	UR20-2PWM-I-2.5A-2DI-P	**Input Data**		0	0	8	8
		RWr (n):	Status DI and internal temperature				
		RWr (n+1):	Supply voltage				
		RWr (n+2):	Value Channel 2				
		RWr (n+3):	Value Channel 3				
		Output Data					
		RWw (n):	Target value Channel 2				
		RWw (n+1):	Target value Channel 3				
		RWw (n+2):	Release value Channel 2 and Channel 3				
		RWw (n+3):	Reserved				
2489830000	UR20-1SM-50W-6DI2DO-P	**Input Data**		0	0	16	16
		RWr (n, n+1):	Current position				
		RWr (n+2):	Current velocity				
		RWr (n+3):	Reserved				
		RWr (n+4):	State DIO / Stepper Motor				
		RWr (n+5):	Register Address / Register Access Control				
		RWr (n+6, n+7):	Register Read Data				
		Output Data					
		RWw (n, n+1):	Target position				
		RWw (n+2):	Target velocity				
		RWw (n+3):	Target acceleration				
		RWw (n+4):	Moving control				
		RWw (n+5):	Register Address /Register Access Control				
		RWw (n+6, n+7):	Register Write Data				
2705620000	UR20-2AI-UI-16	**Input Data**		0	0	4	0
2566090000	UR20-2AI-UI-16-DIAG	RWr (n):	AI0				
		RWr (n+1):	AI1				

1) The process data of the time stamp modules (UR20-...-TS) are not synchronised in the entire CC-Link-IE-TSN network, but only locally within the u-remote station.

Process data mapping UR20-FBC-CC-TSN

Item No.	Product	Process data mapping		Data width [Byte]			
				RX	RY	RWr	RWw
1315620000	UR20-4AI-UI-16	**Input Data**		0	0	8	0
1315690000	UR20-4AI-UI-16-DIAG	RWr (n):	AI0				
1993880000	UR20-4AI-UI-DIF-16-DIAG	RWr (n+1):	AI1				
1506920000	UR20-4AI-UI-16-HD	RWr (n+2):	AI2				
1506910000	UR20-4AI-UI-16-DIAG-HD	RWr (n+3):	AI3				
1394390000	UR20-4AI-UI-12						
2001670000	UR20-4AI-R-HS-16-DIAG						
1938690000	SAI-AU M12 SB 4AI						
1315650000	UR20-8AI-I-16-HD	**Input Data**		0	0	16	0
1315720000	UR20-8AI-I-16-DIAG-HD	RWr (n):	AI0 / RTD 0				
1315670000	UR20-8AI-I-PLC-INT	RWr (n+1):	AI1 / RTD 1				
2555940000	UR20-8AI-RTD-DIAG-2W	RWr (n+2):	AI2 / RTD 2				
1529370000	UR20-8AI-I-16-DIAG	RWr (n+3):	AI3 / RTD 3				
		RWr (n+4):	AI4 / RTD 4				
		RWr (n+5):	AI5 / RTD 5				
		RWr (n+6):	AI6 / RTD 6				
		RWr (n+7):	AI7 / RTD 7				
1315700000	UR20-4AI-RTD-DIAG	**Input Data**		0	0	8	0
2456540000	UR20-4AI-RTD-HP-DIAG	RWr (n):	RTD0 / TC0				
1315710000	UR20-4AI-TC-DIAG	RWr (n+1):	RTD0 / TC1				
1938710000	SAI-AU M12 SB 4PT100	RWr (n+2):	RTD0 / TC2				
1938720000	SAI-AU M12 SB 4THERM0	RWr (n+3):	RTD0 / TC3				
3039320000	UR20-15AI-U-16-DIAG	**Input Data**		0	0	10	2
		RWr (n):	Mailbox data, Word 0				
		RWr (n+1):	Mailbox data, Word 1				
		RWr (n+2):	Mailbox data, Word 2				
		RWr (n+3):	Mailbox data, Word 3				
		RWr (n+4):	Status Word				
		Output Data					
		RWw (n):	Control Word				

1) The process data of the time stamp modules (UR20-...-TS) are not synchronised in the entire CC-Link-IE-TSN network, but only locally within the u-remote station.

Process data mapping UR20-FBC-CC-TSN

Item No.	Product	Process data mapping		Data width [Byte]			
				RX	RY	RWr	RWw
1990070000	UR20-2AI-SG-24-DIAG	**Input Data**					
		RWr (n, n+1):	AI0 Input Value				
		RWr (n+2, n+3):	AI1 Input Value				
		RWr (n+4):	Status Word (DI0/DI1 Status)				
		RWr (n+5):	Reserved				
		...					
		RWr (n+7):	Reserved				
		Output Data		0	0	16	16
		RWw (n, n+1):	AO0 manual tare value				
		RWw (n+2, n+3):	AO1 manual tare value				
		RWw (n+4):	Control Word (AI0/AI1 Tare Config)				
		RWw (n+5):	Reserved				
		...					
		RWw (n+7):	Reserved				
2007420000	UR20-3EM-230V-AC	**Input Data**					
		RWr (n):	Channel 0				
		RWr (n+1):	Channel 1				
		RWr (n+2):	Channel 2				
		...					
		RWr (n+7):	Channel 7				
		Output Data		0	0	16	16
		RWw (n):	Counter Reset / Key for counter Reset				
		RWw (n+1):	Reserved				
		...					
		RWw (n+7):	Reserved				
2705630000	UR20-2AO-UI-16	**Output Data**					
2566100000	UR20-2AO-UI-16-DIAG	RWw (n):	AO0	0	0	0	4
		RWw (n+1):	AO1				
1315680000	UR20-4AO-UI-16	**Output Data**					
2453880000	UR20-4AO-UI-16-M	RWw (n):	AO0				
1315730000	UR20-4AO-UI-16-DIAG	RWw (n+1):	AO1				
2453870000	UR20-4AO-UI-16-M-DIAG	RWw (n+2):	AO2	0	0	0	8
1510690000	UR20-4AO-UI-16-HD	RWw (n+3):	AO3				
1506930000	UR20-4AO-UI-16-DIAG-HD						
1938700000	SAI-AU M12 SB 4AO						

1) The process data of the time stamp modules (UR20-...-TS) are not synchronised in the entire CC-Link-IE-TSN network, but only locally within the u-remote station.

Process data mapping UR20-FBC-CC-TSN

Item No.	Product	Process data mapping		Data width [Byte]			
				RX	RY	RWr	RWw
1315570000	UR20-1CNT-100-1DO	**Input Data**		0	0	16	16
		RWr (n, n+1):	Counter Value				
		RWr (n+2, n+3):	Latch Value				
		RWr (n+4):	Counter Status				
		RWr (n+5):	Timestamp				
		RWr (n+6):	Reserved				
		RWr (n+7):	Reserved				
		Output Data					
		RWw (n, n+1):	Comparison Value				
		RWw (n+2, n+3):	Set Value				
		RWw (n+4):	Control Word				
		RWw (n+5):	Reserved				
		...					
		RWw (n+7):	Reserved				
1315590000	UR20-2CNT-100	**Input Data**		0	0	16	16
		RWr (n, n+1):	Counter Value 0				
		RWr (n+2, n+3):	Counter Value 1				
		RWr (n+4):	Counter Status 0				
		RWr (n+5):	Counter Status 1				
		RWr (n+6):	Reserved				
		RWr (n+7):	Reserved				
		Output Data					
		RWw (n, n+1):	Comparison Value Counter 0				
		RWw (n+2, n+3):	Comparison Value Counter 1				
		RWw (n+4):	Control Word Counter 0				
		RWw (n+5):	Control Word Counter 1				
		RWw (n+6):	Reserved				
		RWw (n+7):	Reserved				
1315580000	UR20-1CNT-500	**Input Data**		0	0	8	16
		RWr (n, n+1):	Counter Value				
		RWr (n+2):	Counter Status				
		RWr (n+3):	Timestamp				
		Output Data					
		RWw (n, n+1):	Comparison Value				
		RWw (n+2, n+3):	Set Value				
		RWw (n+4):	Control Word				
		RWw (n+5):	Reserved				
		...					
		RWw (n+7):	Reserved				

1) The process data of the time stamp modules (UR20-...-TS) are not synchronised in the entire CC-Link-IE-TSN network, but only locally within the u-remote station.

Process data mapping UR20-FBC-CC-TSN

Item No.	Product	Process data mapping		Data width [Byte]			
				RX	RY	RWr	RWw
1508080000	UR20-2FCNT-100	**Input Data**		0	0	24	16
		RWr (n, n+1):	Current measured period Channel 0				
		RWr (n+2, n+3):	Rising edges period Channel 0				
		RWr (n+4, n+5):	Current measured period Channel 1				
		RWr (n+6, n+7):	Rising edges period Channel 1				
		RWr (n+8):	Channel Status 0				
		RWr (n+9):	Channel Status 1				
		RWr (n+10):	Reserved				
		RWr (n+11):	Reserved				
		Output Data					
		RWw (n, n+1):	Measurement cycle period Channel 0				
		RWw (n+2, n+3):	Measurement cycle period Channel 1				
		RWw (n+4):	Control Word Channel 0				
		RWw (n+5):	Control Word Channel 1				
		RWw (n+6):	Reserved				
		RWw (n+7):	Reserved				
1508090000	UR20-1SSI	**Input Data**		0	0	8	0
		RWr (n, n+1):	Encoder value				
		RWr (n+2):	16 Bit time stamp				
		RWr (n+3):	Reserved				
1315750000	UR20-1COM-232-485-422	**Input Data**		0	0	16	16
		RWr (n):	Status Word				
		RWr (n+1 ... n+7):	Received data				
		Output Data					
		RWw (n):	Status Word				
		RWw (n+1 ... n+7):	Transmission data				
2826800000	UR20-1COM-232-485-422-V2	**Input Data**		0	0	19	19
		RWr (n ... n+1,5):	Status Word				
		RWr (n+1,5 ... n+8,5):	Received data				
		Output Data					
		RWw (n ... n+1,5):	Status Word				
		RWw (n+1,5 ... n+8,5):	Transmission data				
2007430000 3116480000	UR20-1COM-SAI-PRO UR20-1COM-SAI-PRO-V2	The communication module acts similar to an empty module and does not provide I/O data. The connected subbus modules are mapped like u-remote based I/O modules, each with its own u-remote slot.		0	0	0	0

1) The process data of the time stamp modules (UR20-...-TS) are not synchronised in the entire CC-Link-IE-TSN network, but only locally within the u-remote station.

Process data mapping UR20-FBC-CC-TSN

Item No.	Product	Process data mapping		Data width [Byte]			
				RX	RY	RWr	RWw
2489840000	UR20-1COM-CANOPEN	**Input Data**		0	0	3 – 128	3 – 128
		RWr (n):	Status Word and information about data length				
		RWr (n+1, ...):	Process data				
		Output Data					
		RWw (n):	Control Word and information about data length				
		RWr (n+1, ...):	Process data				
1938730000	SAI-AU M12 SB 2CNT	**Input Data**		0	0	16	8
		RWr (n, n+1):	Counter Value 0				
		RWr (n+2, n+3):	Counter Value 1				
		RWr (n+4):	Overload Status/Status Counter 0				
		RWr (n+5):	Status Counter 1				
		RWr (n+6, n+7):	Reserved				
		Output Data					
		RWw (n, n+1):	Control Value Counter 0/1				
		RWw (n+2):	Control Bytes Counter 0/1				
		RWw (n+3):	Reserved				
1315740000 2819690000	UR20-4COM-IO-LINK UR20-4COM-IO-LINK-V2	**Input Data**		0	0	16/24/32/ ... /136	16/24/32/ ... /136
		RWr (n):	IO-Link Device Status Word Channel 1 ... 4				
		RWr (n+1, ...):	I/O Link Input Data				
		Output Data					
		RWw (n):	IO-Link Device Control Word Channel 1 ... 4				
		RWw (n+1, ...):	I/O Link Output Data				
2742570000	UR20-4DI-4DO-PN-FSCC	See IP20 modules for functional safety manual (Document No. 1484600000)					
2742580000	UR20-8DI-PN-FSCC	See IP20 modules for functional safety manual (Document No. 1484600000)					

1) The process data of the time stamp modules (UR20-...-TS) are not synchronised in the entire CC-Link-IE-TSN network, but only locally within the u-remote station.

Process data mapping UR20-FBC-CC-TSN

Item No.	Product	Process data mapping		Data width [Byte]			
				RX	RY	RWr	RWw
1335030000	UR20-PF-O-1DI-SIL	**Input Data**		4	0	0	0
1335040000	UR20-PF-O-2DI-DELAY-SIL	RX (n):	Safety input 0				
1335050000	UR20-PF-O-2DI-SIL	RX (n+1):	Reserved / Safety input 1				
		RX (n+2):	Automatic start				
		RX (n+3):	Manual start				
		RX (n+4):	Safety input 0, channel 1				
		RX (n+5):	Safety input 0, channel 2				
		RX (n+6):	Reserved / Safety input 1, channel 1				
		RX (n+7):	Reserved / Safety input 1, channel 2				
		RX (n+8):	24 V Safe output				
		RX (n+9):	Reserved / SS1 output				
		RX (n+10):	24 V DC feed-in				
		RX (n+11):	Reserved				
		...					
		RX (n+24):	Reserved / DIP-Switch configuration Safe Input0				
		RX (n+25):	Reserved / DIP-Switch configuration Safe Input0				
		RX (n+26):	Reserved / DIP-Switch configuration Safe Output				
		RX (n+27):	Reserved / DIP-Switch configuration Safe Output				
		...					
		RX (n+31):	Reserved				

1) The process data of the time stamp modules (UR20-...-TS) are not synchronised in the entire CC-Link-IE-TSN network, but only locally within the u-remote station.

UR20-FBC-CC-TSN Alarm message protocol

- The UR20-FBC-CC-TSN cyclic process data indicate alarm message events (see process data mapping table).
- The PLC reads each alarm message via SLMP dependent on the cyclic alarm bits as follows: diagnostic alarm, process alarm, pull alarm and plug alarm event (see process data mapping table).

If at least one alarm (diagnostic alarm, process alarm) is activated, the pending diagnostics and alarms must be processed cyclically in accordance with the alarm message protocol. Pending alarms that have not yet been collected can be recognised by the RX process data RX (n) to RX (n+3), see Process data mapping table.
Alarms and diagnostics must be collected (acknowledged) continuously. The retrieval (acknowledgement) must be programmed individually with PLC programme code.

Alarms and diagnoses that have not been acknowledged can block new alarm or diagnostic events. For a proper alarm treatment, it is neccessary to read all alarms and diagnostics.

CC-Link safety modules can only be commissioned if the acknowledgement of diagnostics and alarms is ensured.

Example:

Request data format (G.SLMPSND)

Command	Subcommand	Head device No. and Device code						No. of device points
		Reservation	Head device No.	Device code	Reservation	Extension specification	Reservation	
0x0401	0x0080	0x0000	Alarm type	0x00AB	0x0000	0x00FF	0xF8	Data width

Head device No.	Selection of alarm type to be read	
	Alarm type	**Content**
	0x000001	Diagnostic alarm
	0x000002	Process alarm
	0x000003	Pull alarm
	0x000004	Plug alarm
Extension specification	0x00FF	Acquire abnormal I/O unit information
No. of device points	Data width of response data to be read	
	Data width	**Content**
	0x0032	Data width for acquiring diagnostic alarm data
	0x0008	Data width for acquiring process alarm data
	0x0004	Data width for acquiring pull alarm data
	0x0004	Data width for acquiring plug alarm data

Response data format (G.SLMPSND)

Alarm type	Slot number	Res	Data
Alarm type	Slot number	0xFF	Alarm data

Alarm type	Requested alarm type	
	Alarm type	**Content**
	0x01	Diagnostic alarm
	0x02	Process alarm
	0x03	Pull alarm
	0x04	Plug alarm
Slot number	Slot number of the I/O module where the event occurred	
	Slot number	**Content**
	0x01 ... 0x64	Get information on 1st ... 64th I/O unit
	0xFF	No alarm pending (Data area = 0))
Res	Reserved = always 0xFF	
Data	Data area for the requested event	
	Alarm type	**Content**
	0x01	47-byte Diagnostic data
	0x02	4-byte Process alarm data
	0x03	None (Pull alarm contents can be determined by slot number)
	0x04	None (Plug alarm contents can be determined by slot number)

5.13 PROFINET fieldbus coupler ECO

The UR20-FBC-PN-ECO fieldbus coupler is a PROFINET I/O participant certified by the PROFINET user organisation. The coupler is the head module for the u-remote system bus, to which up to 16 active u-remote modules can be connected. The PROFINET coupler has two Ethernet ports, and the integrated switch supports a line network structure.
The coupler can be accessed with a system-independent web server application via the Ethernet. Thus, all information, such as diagnostics, status values and parameters, can be read and all connected modules can be simulated or forced.
In order to access the coupler via Ethernet, an IP address for the coupler must be configured in the controller (see documentation for the controller used).
The station's main power supply is integrated in the coupler. Power is supplied via a 4-pole connector.



Fieldbus coupler UR20-FBC-PN-ECO (Item No. 2659680000)

Status indicators

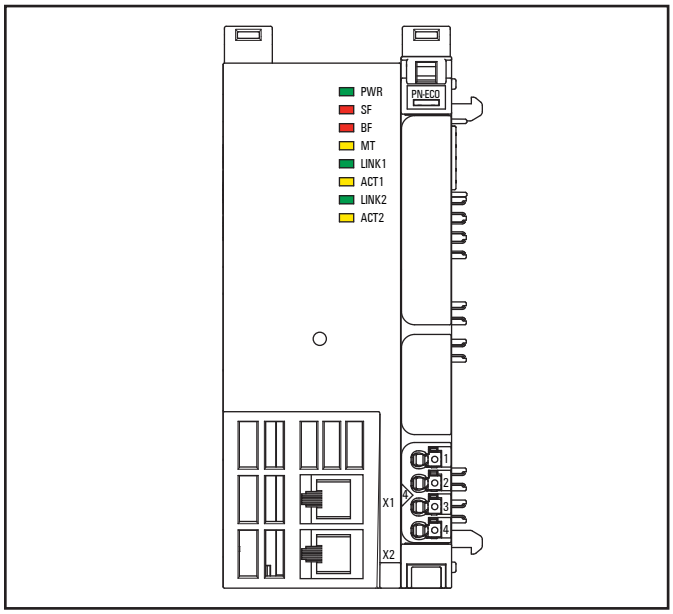

LED status indicators UR20-FBC-PN-ECO, troubleshooting see Chapter 12

PWR	Power LED	**Green**: Supply voltage connected **Red:** Coupler not yet started completely or hardware error
SF	Collective error	**Red:** Configuration error, or error in the coupler, or error in a module, or there is a new diagnostic message **Red flashing**: Station in Force mode
BF	Bus failure	**Red:** No connection to the fieldbus **Red flashing**: Configuration error, no connection to the control unit, or error in the parameter set, or firmware update is running
MT	Maintenance	**Yellow**: Error on the system bus or the fieldbus
LINK1	Connection	**Green**: Connection established between port 1 of the coupler and another field device
ACT1	Active	**Yellow**: Data being exchanged on port 1
LINK2	Connection	**Green**: Connection established between port 2 of the coupler and another field device
ACT2	Active	**Yellow**: Data being exchanged on port 2

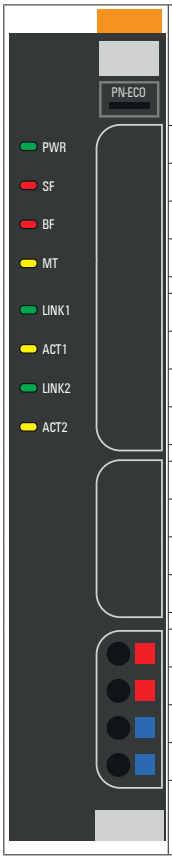

	Coupler power supply LED green: supply voltage > 17 V ±1 V red: at least one current path < 17 V ±1 V
4.1	Green: supply voltage > 17 V DC ±1 V
4.2	Red: supply voltage < 17 V DC ±1 V

LED indicators UR20-FBC-PN-ECO, troubleshooting see Chapter 12

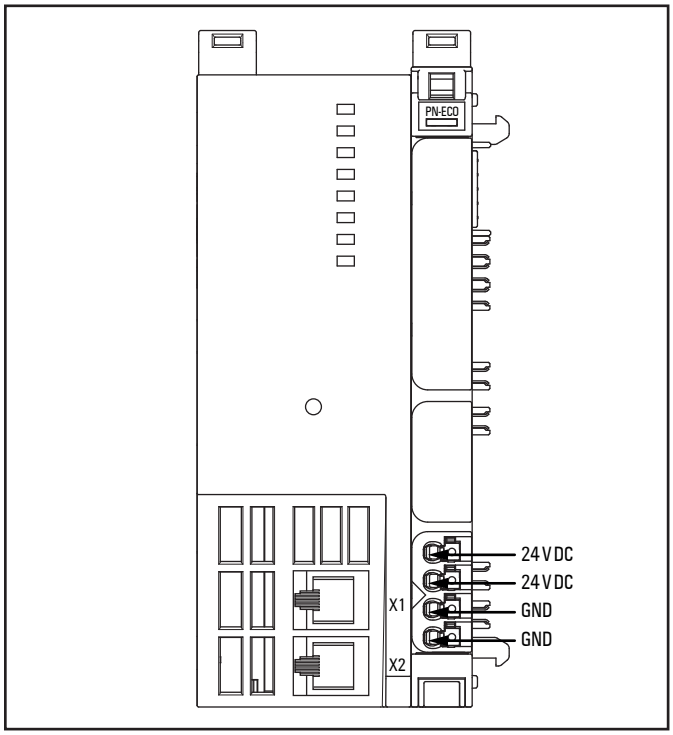

Connection diagram UR20-FBC-PN-ECO

ATTENTION

Risk of material damage!
In the case of a maximum power supply of >8 A, all four contacts must be connected with 1.5 mm² wiring!

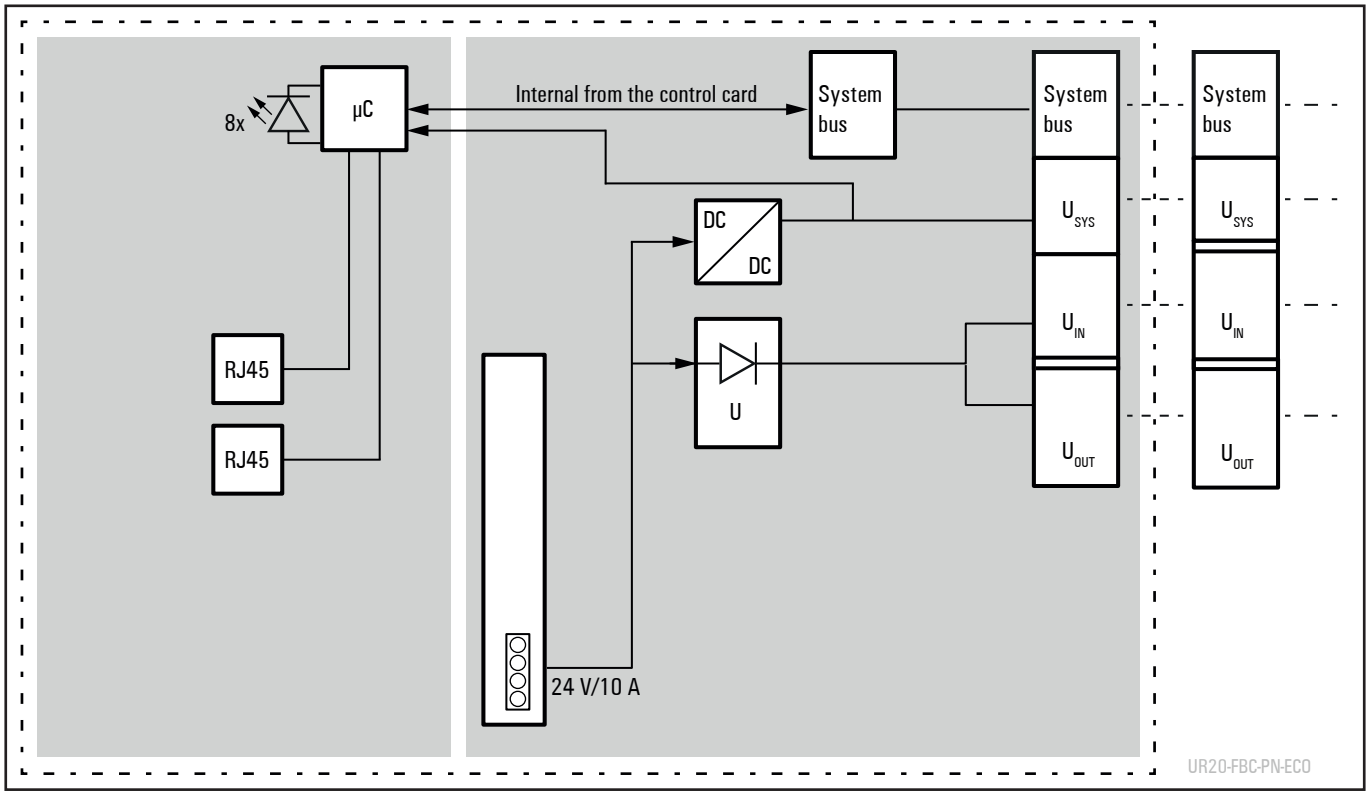

Block diagram UR20-FBC-PN-ECO

Technical data UR20-FBC-PN-ECO (Item No. 2659680000)

System data		
Connection	2 x RJ-45	
Fieldbus protocol	PROFINET IO (RT)	
Redundancy protocol	MRP	
Input data width	max. 512 Byte	
Output data width	max. 512 Byte	
Parameter data	max. 4362 Byte	
Diagnostic data	max. 1408 Byte	
Number of modules	max. 16 active	
Configuration interface	via RJ45	
Transfer rate	Fieldbus	max. 100 Mbps
	u-remote system bus	max. 48 Mbps
Start-up	> 1 s	
Supply		
Supply voltage for system, inputs and outputs	24 V DC +20 % / -15 %	
Max. feed-in current	horizontal installation	10 A (0 ... +50 °C / +32 °F ... +122 °F)
	vertical installation	10 A (0 ... +45 °C / +32 °F ... +113 °F), 8 A (0 ... +50 °C / +32 °F ... +122 °F)
Current consumption from system current path I_{SYS}	80 mA	
Temperature data		
Operation (horizontal installation)	0 °C ... +50 °C / +32 °F ... +122 °F (1 x 10 A power supply)	
Operation (vertical installation)	0 °C ... +45 °C / +32 °F ... +113 °F (1 x 10 A power supply)	
Storage, transport	-40 °C ... +85 °C / -40 °F ... +185 °F	
Connection data		
Type of connection	"PUSH IN"	
Conductor cross-section	Single-wired, fine-wired	0.14 ... 1.5 mm^2 (AWG 26 ... 16)
Weight		
Weight (operational status)	242 g	
General data, see Section 3.2		

The cables to be connected must be temperature resistant up of 65 °C.

Overview of editable parameters UR20-FBC-PN-ECO

Parameter	Optional values	Default
IP address	4 numbers between 0 and 255	
Subnet mask	4 numbers between 0 and 255	
Gateway	4 numbers between 0 and 255	
Webserver via Ethernet[1)]	disabled / enabled	enabled
Station name	free text, max. 240 characters, permitted characters: a-z, 0-9, full stop, hyphen	
HTTPS setting	HTTP & HTTPS concurrent operation / only HTTPS; no HTTP	HTTP & HTTPS concurrent operation
Process alarm	disabled / enabled	disabled
Diagnostic alarm	disabled / enabled	disabled
Type of diagnosis	Extended channel diagnostic (short diagnostic) / Vendor-specific diagnostic (complete diagnostic)	Extended channel diagnostic (short diagnostic)
Output behaviour on fieldbus error	All outputs off / Enable substitute value / Hold last value	All outputs off
Module behaviour on hot swap	Continue data exchange / Behaviour like fieldbus error	Continue data exchange
Data format	Motorola / Intel	Motorola
Lock force mode	Force mode unlocked / Force mode locked	Force mode unlocked

1) Change requires restart of the fieldbus coupler.

Reading diagnostic data

The last diagnostic telegram reported by the respective module can be read out from a slot via the acyclic services (ReadRecord). The diagnostic data are listed in the respective module description (see chapter 6).
The following diagnostic data are available:

Index 0	the first 4 Byte
Index 2	47 Byte (the complete string)

Status word

The following process data are available if the PROFINET coupler is used with status word.

Deactivating SNMP

SNMP (simple network management protocol, version V1) can be deactivated in UR20-FBC-PN-ECO couplers (from FW Version 01.04.00), if GSDML version GSDML V2.43 is used. The activation or deactivation is done in object SNMPadjust, see settings of the coupler.
Default SNMP community names can be changed, so that write access to the device without prior user authentication isn't possible any more.

Access to the index: via TIA Portal v19, or acyclical via Index 0x8200 at the coupler subslot 0x8000.
Contents: 6 Byte Blockheader (including a length), 2 byte Control, ReadOnlyName and ReadWriteName (prepended by length).

Examples:
SNMP off: 03 00 00 06 01 00 00 00 00 00
SNMP Read only: 03 00 00 06 01 00 00 01 00 00
SNMP ReadWrite: 03 00 00 06 01 00 00 02 00 00
SNMP ReadOnly, set Read Community Name to abc (normally public): 03 00 00 09 01 00 00 01 03 61 62 63 00
SNMP ReadWrite, set both Community Names to abc and def (normally public and private): 03 00 00 0c 01 00 00 02 03 61 62 63 03 64 65 66

Status word UR20-FBC-PN-ECO

Bit	Name	Description
0	Summarized module diagnosis	A diagnosis is available for at least one module with diagnostics functionality.
1	Errorbit 1	Reserve bit 1, currently not used
2	Errorbit 2	Reserve bit 2, currently not used
3	Systembus error	Error on the system bus. Communication with the connected modules is disrupted.
4	Port 1 Link active	The port 1 link is active.
5	Port 2 Link active	The port 2 link is active.
6	I/O-Configuration error	Deviation in the configuration.
7	Master configuration error	More than two modules have been physically removed from the station.
8	MRP enabled	Media redundancy is enabled.
9	MRP role	MRP role: 0 = client, 1 = manager. The PROFINET coupler supports only the client role.
10	Force mode active	The force mode was activated via the web server. Process data cannot be exchanged between the master and forced channels.
11	Errorbit 11	Reserve bit 11, currently not used
12	Errorbit 12	Reserve bit 12, currently not used
13	Errorbit 13	Reserve bit 13, currently not used
14	Voltage error	Error on the voltage supply
15	IO-Link diagnosis	A diagnosis is present on an IO-Link device.

Coupler-dependent data width of I/O modules UR20-FBC-PN-ECO

Item No.	Module	Configuration	Parameters	Diagnostics	Process data	
					Input	Output
		Bytes	Bytes	Bytes	Bytes	Bytes
2659680000	UR20-FBC-PN-ECO	4	10	47	4	4
1315170000	UR20-4DI-P[1)]	4	8	47	2	1
2009360000	UR20-4DI-P-3W[1)]	4	8	47	2	1
1315180000	UR20-8DI-P-2W	4	12	47	2	1
1394400000	UR20-8DI-P-3W	4	12	47	2	1
1315190000	UR20-8DI-P-3W-HD	4	12	47	2	1
1315200000	UR20-16DI-P	4	–	47	3	1
1315210000	UR20-16DI-P-PLC-INT	4	–	47	3	1
1460140000	UR20-2DI-P-TS	4	10	47	61	1
1460150000	UR20-4DI-P-TS	4	12	47	61	1
1315350000	UR20-4DI-N[1)]	4	8	47	2	1
1315370000	UR20-8DI-N-3W	4	12	47	2	1
1315390000	UR20-16DI-N	4	–	47	3	1
1315400000	UR20-16DI-N-PLC-INT	4	–	47	3	1
1550070000	UR20-4DI-2W-230V-AC[1)]	4	–	47	2	1
2457240000	UR20-8DI-ISO-2W	4	12	47	2	1
1315220000	UR20-4DO-P[1)]	4	5	47	1	2
1315230000	UR20-4DO-P-2A[1)]	4	5	47	1	2
1394420000	UR20-4DO-PN-2A	4	5	47	1	2

1) Also available as follower module, recognisable in the device description file by ... before the module name. Can follow another supported module and then occupies one byte less in the process data (input 1 and output 1).
2) See manual for UR20-4COM-IO-LINK communication module

Coupler-dependent data width of I/O modules UR20-FBC-PN-ECO

Item No.	Module	Configuration	Parameters	Diagnostics	Process data	
					Input	Output
		Bytes	Bytes	Bytes	Bytes	Bytes
1315240000	UR20-8DO-P	4	5	47	1	2
1509830000	UR20-8DO-P-2W-HD	4	5	47	1	2
1315250000	UR20-16DO-P	4	–	47	1	3
1315270000	UR20-16DO-P-PLC-INT	4	–	47	1	3
1315410000	UR20-4DO-N[1)]	4	5	47	1	2
1315420000	UR20-4DO-N-2A[1)]	4	5	47	1	2
1315430000	UR20-8DO-N	4	5	47	1	2
1315440000	UR20-16DO-N	4	–	47	1	3
1315450000	UR20-16DO-N-PLC-INT	4	–	47	1	3
2457250000	UR20-4DO-ISO-4A[1)]	4	5	47	1	2
2456530000	UR20-8DIO-P-3W-DIAG	4	12	47	2	2
1315540000	UR20-4RO-SSR-255[1)]	4	5	47	1	2
1315550000	UR20-4RO-CO-255[1)]	4	5	47	1	2
1315600000	UR20-2PWM-PN-0.5A	4	12	47	5	13
3036960000	UR20-2PWM-PN-0.5A-V2	4	12	47	5	13
1315610000	UR20-2PWM-PN-2A	4	12	47	5	13
3036950000	UR20-2PWM-PN-2A-V2	4	12	47	5	13
2697910000	UR20-2PWM-I-2.5A-2DI-P	4	68	47	9	7
2489830000	UR20-1SM-50W-6DI2DO-P	4	25	47	17	17
2705620000	UR20-2AI-UI-16	4	8	47	5	1
2566090000	UR20-2AI-UI-16-DIAG	4	10	47	5	1
1315620000	UR20-4AI-UI-16	4	10	47	9	1
1315690000	UR20-4AI-UI-16-DIAG	4	12	47	9	1
1993880000	UR20-4AI-UI-DIF-16-DIAG	4	12	47	9	1
2544660000	UR20-4AI-UI-DIF-32-DIAG	4	44	47	17	1
2566960000	UR20-4AI-UI-ISO-16-DIAG	4	27	47	9	1
1506920000	UR20-4AI-UI-16-HD	4	10	47	9	1
1506910000	UR20-4AI-UI-16-DIAG-HD	4	12	47	9	1
1394390000	UR20-4AI-UI-12	4	10	47	9	1
1529370000	UR20-8AI-I-16-DIAG	4	15	47	17	1
1315650000	UR20-8AI-I-16-HD	4	14	47	17	1
1315720000	UR20-8AI-I-16-DIAG-HD	4	16	47	17	1
1315670000	UR20-8AI-I-PLC-INT	4	14	47	17	1
1315700000	UR20-4AI-RTD-DIAG	4	32	47	9	1
2456540000	UR20-4AI-RTD-HP-DIAG	4	48	47	9	1
1315710000	UR20-4AI-TC-DIAG	4	32	47	9	1
3233190000	UR20-4AI-TC-CJT-DIAG	3	31	47	16	–

1) Also available as follower module, recognisable in the device description file by ... before the module name. Can follow another supported module and then occupies one byte less in the process data (input 1 and output 1).

2) See manual for UR20-4COM-IO-LINK communication module

Coupler-dependent data width of I/O modules UR20-FBC-PN-ECO

Item No.	Module	Configuration	Parameters	Diagnostics	Process data	
					Input	Output
		Bytes	Bytes	Bytes	Bytes	Bytes
2001670000	UR20-4AI-R-HS-16-DIAG	4	67	47	9	1
2555940000	UR20-8AI-RTD-DIAG-2W	4	14	47	17	1
3039320000	UR20-15AI-U-16-DIAG	4	28	47	10	2
1990070000	UR20-2AI-SG-24-DIAG	4	30	47	17	17
2007420000	UR20-3EM-230V-AC	4	31	47	17	17
2920830000	UR20-3EM-400V-AC-CT1A	4	12	47	5	13
2920840000	UR20-3EM-400V-AC-CT5A	4	12	47	5	13
2920850000	UR20-3EM-400V-AC-RC	4	12	47	5	13
2920860000	UR20-3EM-400V-AC-333mV	4	12	47	5	13
2705630000	UR20-2AO-UI-16	4	10	47	1	5
2566100000	UR20-2AO-UI-16-DIAG	4	11	47	1	5
2566970000	UR20-2AO-UI-ISO-16-DIAG	4	18	47	1	5
1315680000	UR20-4AO-UI-16	4	16	47	1	9
2453880000	UR20-4AO-UI-16-M	4	16	47	1	9
1315730000	UR20-4AO-UI-16-DIAG	4	17	47	1	9
2453870000	UR20-4AO-UI-16-M-DIAG	4	17	47	1	9
1510690000	UR20-4AO-UI-16-HD	4	16	47	1	9
1506930000	UR20-4AO-UI-16-DIAG-HD	4	17	47	1	9
1315570000	UR20-1CNT-100-1DO	4	25	47	13	11
1315590000	UR20-2CNT-100	4	44	47	13	13
1315580000	UR20-1CNT-500	4	25	47	9	11
1508080000	UR20-2FCNT-100	4	6	47	21	13
1508090000	UR20-1SSI	4	12	47	7	1
1315750000	UR20-1COM-232-485-422	4	10	47	17	17
2826280000	UR20-1COM-232-485-422-V2	4	37	47	20	20
2007430000	UR20-1COM-SAI-PRO	4	–	47	1	1
3116480000	UR20-1COM-SAI-PRO-V2	4	–	47	1	1
1315740000	UR20-4COM-IO-LINK	4	30	47	2)	2h)
2762630000	UR20-4COM-IO-LINK-V2	4	30	47	2)	2h)
1529780000	UR20-4DI-4DO-PN-FSOE	–	–	–	–	–
1529800000	UR20-8DI-PN-FSOE	–	–	–	–	–
1335060000	UR20-4DI-4DO-PN-FSPS	4	23	47	6	6
1335070000	UR20-8DI-PN-FSPS	4	23	47	6	6
1335030000	UR20-PF-O-1DI-SIL	4	–	47	5	1
1335040000	UR20-PF-O-2DI-DELAY-SIL	4	–	47	5	1
1335050000	UR20-PF-O-2DI-SIL	4	–	47	5	1
Max. data (in bytes)		260	4362	1408	512	512

1) Also available as follower module, recognisable in the device description file by ... before the module name. Can follow another supported module and then occupies one byte less in the process data (input 1 and output 1).

2) See manual for UR20-4COM-IO-LINK communication module

5.14 EtherCAT fieldbus coupler ECO

The UR20-FBC-EC-ECO fieldbus coupler is an EtherCAT[1)] participant certified by the EtherCAT Technology Group. The coupler is the head module for the u-remote system bus, to which up to 16 active u-remote modules can be connected. The EtherCAT coupler has two Ethernet ports, the integrated switch supports a line network structure.
The coupler can be accessed with a system-independent web server application via the Ethernet. Thus, all information, such as diagnostics, status values and parameters, can be read and all connected modules can be simulated or forced. In order to access the coupler via Ethernet, a controller is required that supports the EoE protocol (Ethernet over EtherCAT). EoE must be activated in the controller and a valid IP address for the coupler must be assigned in the controller configuration (see dokumentation for the controller used).
The station's main power supply is integrated in the coupler. Power is supplied via a 4-pole connector.

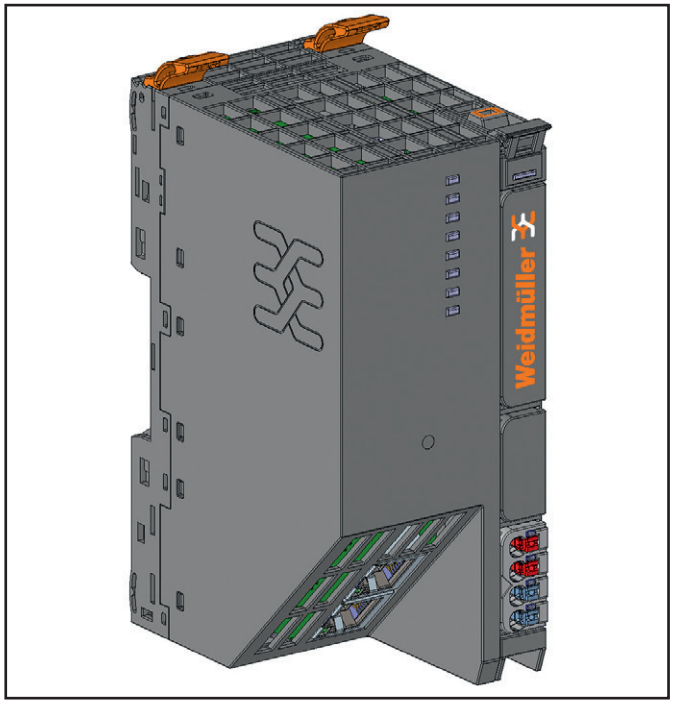

Fieldbus coupler UR20-FBC-EC-ECO (Item No. 2659690000)

1) EtherCAT® and Safety over EtherCAT® are registered trademarks and patented technologies, licensed by Beckhoff Automation GmbH, Germany

Status indicators

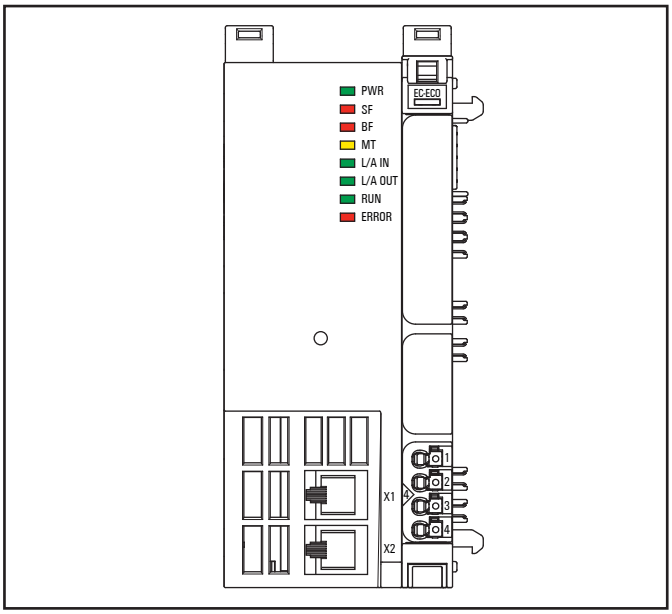

LED status indicators UR20-FBC-EC-ECO, troubleshooting see Chapter 12

PWR	Power LED	**Green**: Supply voltage connected **Red:** Coupler not yet started completely or hardware error
SF	Collective error	**Red:** Configuration error, or error in the coupler, or error in a module, or there is a new diagnostic message **Red flashing**: Station in Force mode
BF	Bus failure	**Red:** No connection to the fieldbus **Red flashing**: Configuration error, no connection to the control unit, or error in the parameter set
MT	Maintenance	**Yellow**: Error on the system bus
L/A IN	Connection/Activity	**Green**: Connection established between port 1 of the coupler and another field device **Green flashing**: Data being exchanged on port 1
L/A OUT	Connection/Activity	**Green**: Connection established between port 2 of the coupler and another field device **Green flashing**: Data being exchanged on port 2
RUN	Coupler state	**Off**: INIT **Green flashing** PRE-OPERATIONAL **Green lights up briefly**: SAFE-OPERATIONAL **Green**: OPERATIONAL
ERROR	Internal error	**Red**: Critical error in the coupler **Red lights up briefly**: Error in coupler application **Red briefly lights up twice**: Output Syncmanager Watchdog expired **Red flashing**: Configuration error

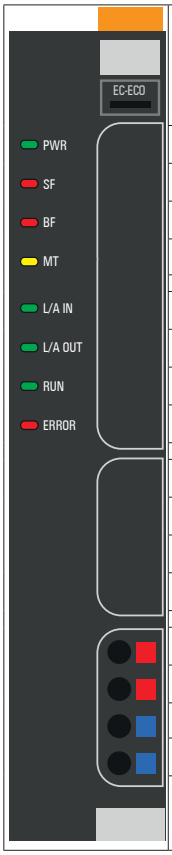

	Coupler power supply LED green: supply voltage > 17 V ±1 V red: at least one current path < 17 V ±1 V
4.1	Green: supply voltage > 17 V DC ±1 V
4.2	Red: supply voltage < 17 V DC ±1 V

LED indicators UR20-FBC-EC-ECO, troubleshooting see Chapter 12

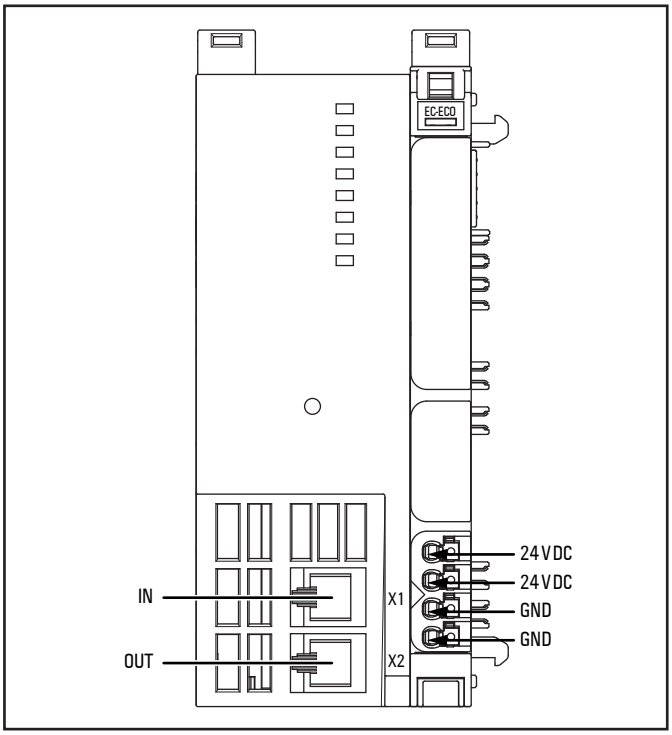

Connection diagram UR20-FBC-EC-ECO

ATTENTION

Risk of material damage!
In the case of a maximum power supply of >8 A, all four contacts must be connected with 1.5 mm² wiring!

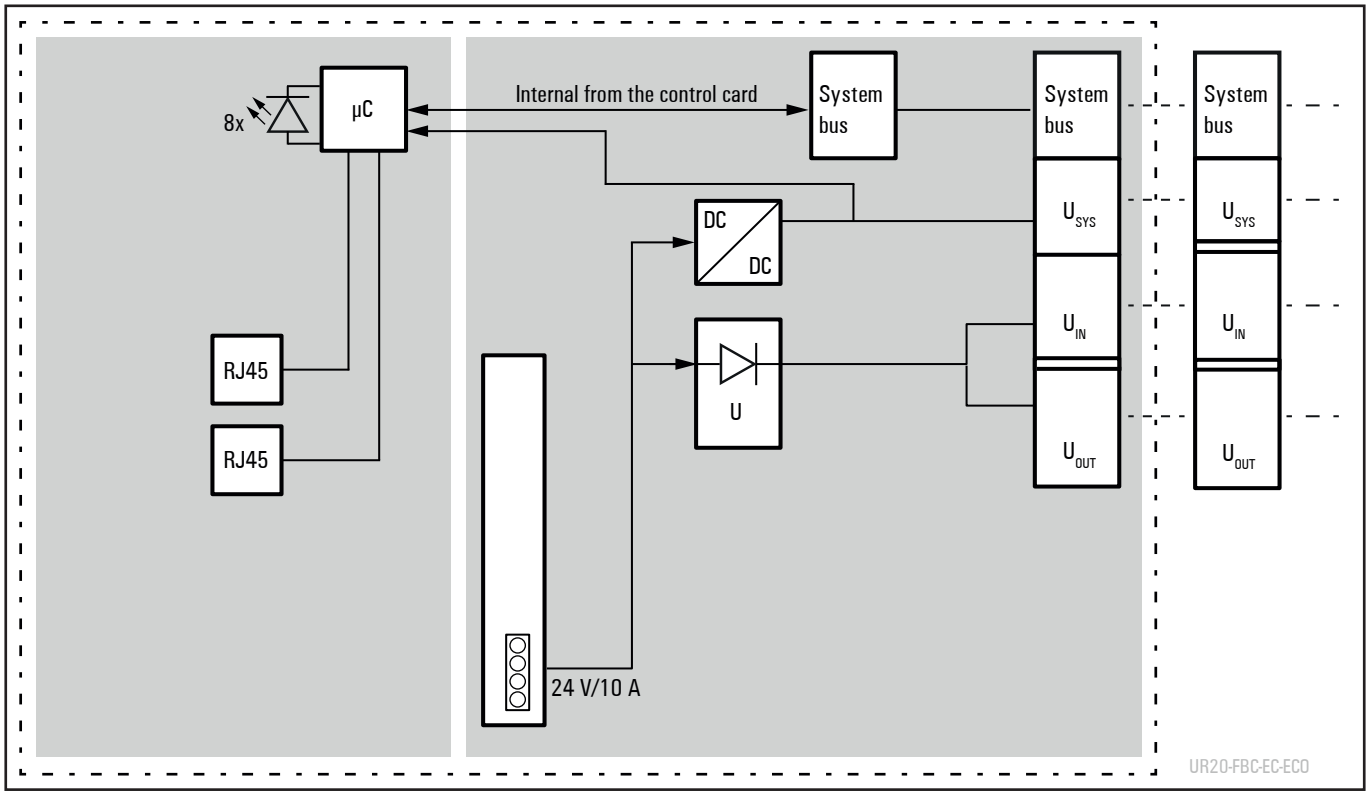

Block diagram UR20-FBC-EC-ECO

Technical data UR20-FBC-EC-ECO (Item No. 2659690000)

System data		
Connection	2 x RJ-45	
Fieldbus protocol	EtherCAT	
Process data	max. 1024 Byte	
Parameter data	max. 16 x 64 Byte	
Diagnostic data	max. 16 x 50 Byte	
Number of modules	max. 16 active	
Configuration interface	via RJ45	
Distributed Clock	not supported	
Transfer rate	Fieldbus	max. 100 Mbps
	u-remote system bus	max. 48 Mbps
Supply		
Supply voltage for system, inputs and outputs	24 V DC +20 % / -15 %	
Max. feed-in current[1)]	horizontal installation	10 A (0 ... +50 °C / +32 °F ... +122 °F)
	vertical installation	10 A (0 ... +45 °C / +32 °F ... +113 °F), 8 A (0 ... +50 °C / +32 °F ... +122 °F)
Current consumption from system current path I_{SYS}	80 mA	
Temperature data[1)]		
Operation (horizontal installation)	0 °C ... +50 °C / +32 °F ... +122 °F (1 x 10 A power supply)	
Operation (vertical installation)	0 °C ... +45 °C / +32 °F ... +113 °F (1 x 10 A power supply)	
Storage, transport	-40 °C ... +85 °C / -40 °F ... +185 °F	
Connection data		
Type of connection	"PUSH IN"	
Conductor cross-section	Single-wired, fine-wired	0.14 ... 1.5 mm² (AWG 26 ... 16)
Weight		
Weight (operational status)	242 g	
General data, see Section 3.2.		

The cables to be connected must be temperature resistant up of 65 °C.

Overview of the editable parameters UR20-FBC-EC-ECO

Parameter	Optional values	Default
I/O data of station synchronous	disabled (0) / enabled (1)	disabled
Slot counting	Count mode from 0 (0) / Count mode from 1 (1)	Count mode from 0
HTTPS setting	HTTP & HTTPS concurrent operation / only HTTPS; no HTTP	only HTTPS; no HTTP
Process alarm	disabled (0) / enabled (1)	disabled
Diagnostic alarm	disabled (0) / enabled (1)	disabled
Output behaviour on fieldbus error	All outputs off (0) / Enable substitute value (1) / Hold last value (2)	All outputs off
Module behaviour on hot swap	Continue data exchange (0) / Behaviour like fieldbus error (1)	Continue data exchange
Data format	Motorola (0) / Intel (1)	Intel
Lock force mode	Force mode unlocked (0) / Force mode locked (1)	Force mode unlocked

Parameter „Slot counting“

This parameter determines whether the counting of the module slots in the station starts with 0 or with 1.

Parameter „Lock force mode“

This parameter determines whether he foce mode can be used or whether it is locked.

Status messages of the u-remote station

In addition to the process input data a coupler status word as well as module status bytes are transfered to the SPS. Thus diagnostics and status messages can be read directly.
The coupler status word describes the status of the u-remote station including the following information:

Coupler status bits UR20-FBC-EC-ECO

Bit	Name	Meaning
0	Summarized module diagnosis	Module diagnostic is present. A diagnosis is available for at least one module with diagnostics functionality.
1	Station pending	More than one module as been pulled. In this status, the coupler cannot determine whether one of the disconnected modules is plugged back into the correct slot.
2	Errorbit 2	Reserve bit 2, currently not used
3	Systembus error	Error on the system bus. Communication with the connected modules is disrupted.
4	Errorbit 4	Reserve bit 4, currently not used
5	Errorbit 5	Reserve bit 5, currently not used
6	I/O-Configuration error	Deviation in the configuration. The module list has changed. The list of configured modules (Configured Module Ident List 0xF030) differs from the module list detected by the coupler (Detected Module Ident List 0xF050).
7	Master configuration error	The list of configured modules (Configured Module Ident List 0xF030) was not transmitted. The coupler cannot perform the comparison with the list of detected modules (Detected Module Ident List 0xF050). Changing to the the OPERATIONAL status is nevertheless possible if it is ensured that the configured module configuration matches with the installed module configuration.
8	Errorbit 8	Reserve bit 8, currently not used
9	Errorbit 9	Reserve bit 9, currently not used
10	Force mode active	Web server force mode is active. Force mode was activated through the web server. Process data cannot be exchanged between the EtherCAT master and forced channels.
11	Errorbit 11	Reserve bit 11, currently not used
12	Errorbit 12	Reserve bit 12, currently not used
13	Errorbit 13	Reserve bit 13, currently not used
14	Voltage error	Error in the supply voltage
15	IO-Link diagnosis	A diagnosis is present on an IO-Link device.

Status messages of the modules

A module status byte is added to each module's process data (with the exception of safe I/O modules UR20-*-FSOE). It describes the status of the module including the following information:

Module status messages

Value	Meaning
0x00	Plug-in station is undefined
0x01	Plug-in station = module OK
0x80	Plug-in station empty, module has been removed
0x81	Incorrect module plugged in
0x82	Diagnosis available

Values written into a CAN object index 0x80nn, subindex 6, 8, 10 or 11 will be read in twisted order!

► Always twist the values when writing into the mentioned subindices.

Example: Write 0x76543210, if 0x1234567 shall be read.

Module diagnosis

The coupler`s status word reveals whether there is a module diagnosis. The history of the module diagnosis can be interrogated via object 0x10F3. A ring buffer stores 20 diagnosis in a way, that the current diagnosis overwrites the eldest one (subindex 06 to 19).

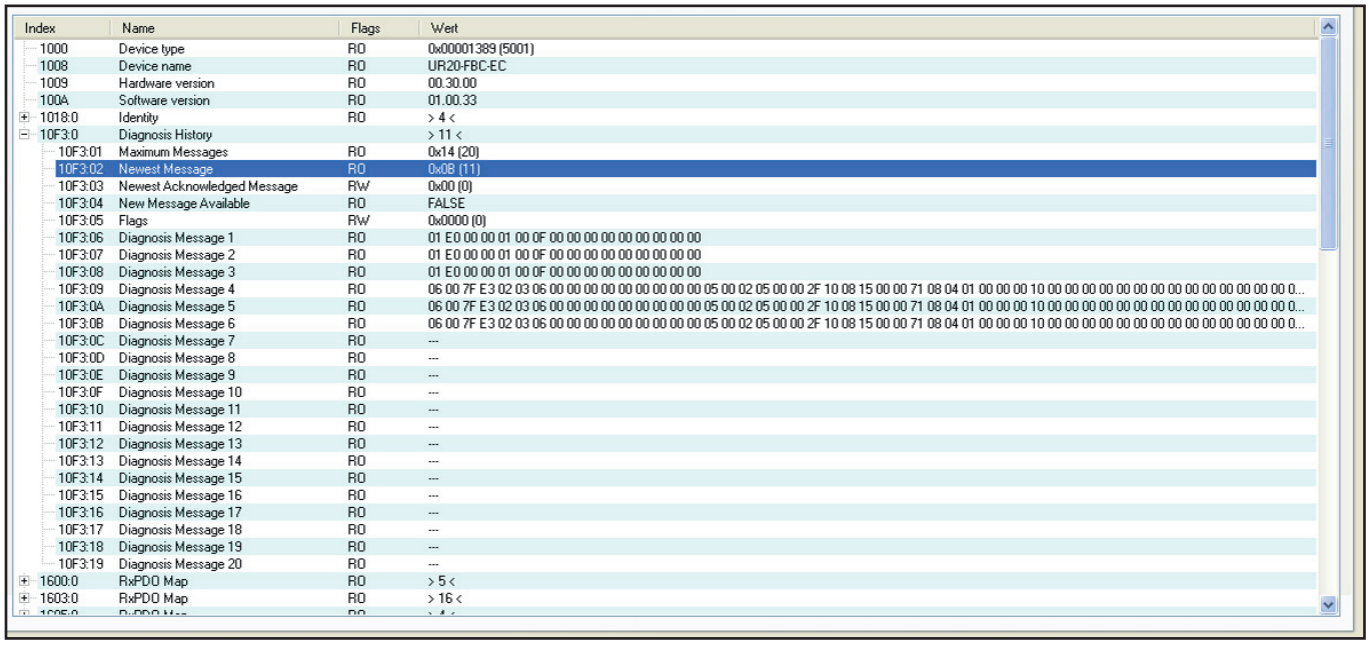

Index	Name	Flags	Wert
1000	Device type	RO	0x00001389 (5001)
1008	Device name	RO	UR20-FBC-EC
1009	Hardware version	RO	00.30.00
100A	Software version	RO	01.00.33
1018:0	Identity	RO	> 4 <
10F3:0	Diagnosis History		> 11 <
10F3:01	Maximum Messages	RO	0x14 (20)
10F3:02	Newest Message	RO	0x0B (11)
10F3:03	Newest Acknowledged Message	RW	0x00 (0)
10F3:04	New Message Available	RO	FALSE
10F3:05	Flags	RW	0x0000 (0)
10F3:06	Diagnosis Message 1	RO	01 E0 00 00 01 00 0F 00 00 00 00 00 00 00 00 00
10F3:07	Diagnosis Message 2	RO	01 E0 00 00 01 00 0F 00 00 00 00 00 00 00 00 00
10F3:08	Diagnosis Message 3	RO	01 E0 00 00 01 00 0F 00 00 00 00 00 00 00 00 00
10F3:09	Diagnosis Message 4	RO	06 00 7F E3 02 03 06 00 00 00 00 00 00 00 00 00 00 00 05 00 02 05 00 00 2F 10 08 15 00 00 71 08 04 01 00 00 00 10 00 00 00 00 00 00 00 00 00 00 00 00 00 00 0...
10F3:0A	Diagnosis Message 5	RO	06 00 7F E3 02 03 06 00 00 00 00 00 00 00 00 00 00 00 05 00 02 05 00 00 2F 10 08 15 00 00 71 08 04 01 00 00 00 10 00 00 00 00 00 00 00 00 00 00 00 00 00 00 0...
10F3:0B	Diagnosis Message 6	RO	06 00 7F E3 02 03 06 00 00 00 00 00 00 00 00 00 00 00 05 00 02 05 00 00 2F 10 08 15 00 00 71 08 04 01 00 00 00 10 00 00 00 00 00 00 00 00 00 00 00 00 00 00 0...
10F3:0C	Diagnosis Message 7	RO	---
10F3:0D	Diagnosis Message 8	RO	---
10F3:0E	Diagnosis Message 9	RO	---
10F3:0F	Diagnosis Message 10	RO	---
10F3:10	Diagnosis Message 11	RO	---
10F3:11	Diagnosis Message 12	RO	---
10F3:12	Diagnosis Message 13	RO	---
10F3:13	Diagnosis Message 14	RO	---
10F3:14	Diagnosis Message 15	RO	---
10F3:15	Diagnosis Message 16	RO	---
10F3:16	Diagnosis Message 17	RO	---
10F3:17	Diagnosis Message 18	RO	---
10F3:18	Diagnosis Message 19	RO	---
10F3:19	Diagnosis Message 20	RO	---
1600:0	RxPDO Map	RO	> 5 <
1603:0	RxPDO Map	RO	> 16 <

History of module diagnosis as shown in TwinCat

Coupler-dependent data width of I/O modules UR20-FBC-EC-ECO

Item No.	Module	Configuration	Parameters[1)]	Diagnostics	Process data	
					Input	Output
		Bytes	Bytes	Bytes	Bytes	Bytes
2659690000	UR20-FBC-EC-ECO	256		3328	1024	1024
1315170000	UR20-4DI-P	4		47	2	–
2009360000	UR20-4DI-P-3W	4		47	2	–
1315180000	UR20-8DI-P-2W	4		47	2	–
1394400000	UR20-8DI-P-3W	4		47	2	–
1315190000	UR20-8DI-P-3W-HD	4		47	2	–
1315200000	UR20-16DI-P	4		47	3	–
1315210000	UR20-16DI-P-PLC-INT	4		47	3	–
1460140000	UR20-2DI-P-TS	4		47	61	–
1460150000	UR20-4DI-P-TS	4		47	61	1
1315350000	UR20-4DI-N	4		47	2	–
1315370000	UR20-8DI-N-3W	4		47	2	–
1315390000	UR20-16DI-N	4		47	3	–
1315400000	UR20-16DI-N-PLC-INT	4		47	3	–
1550070000	UR20-4DI-2W-230V-AC	4		47	2	–
2457240000	UR20-8DI-ISO-2W	4		47	2	–
1315220000	UR20-4DO-P	4		47	1	1
1315230000	UR20-4DO-P-2A	4		47	1	1
1394420000	UR20-4DO-PN-2A	4		47	1	1
1315240000	UR20-8DO-P	4		47	1	1
1509830000	UR20-8DO-P-2W-HD	4		47	1	1
1315250000	UR20-16DO-P	4		47	1	2
1315270000	UR20-16DO-P-PLC-INT	4		47	1	2
1315410000	UR20-4DO-N	4		47	1	1
1315420000	UR20-4DO-N-2A	4		47	1	1
1315430000	UR20-8DO-N	4		47	1	1
1315440000	UR20-16DO-N	4		47	1	2
1315450000	UR20-16DO-N-PLC-INT	4		47	1	2
2457250000	UR20-4DO-ISO-4A	4		47	1	1
2456530000	UR20-8DIO-P-3W-DIAG	4		47	2	1
1315540000	UR20-4RO-SSR-255	4		47	1	1
1315550000	UR20-4RO-CO-255	4		47	1	1
1315600000	UR20-2PWM-PN-0.5A	4		47	5	12
3036960000	UR20-2PWM-PN-0.5A-V2	4		47	5	12
1315610000	UR20-2PWM-PN-2A	4		47	5	12
3036950000	UR20-2PWM-PN-2A-V2	4		47	5	12
2697910000	UR20-2PWM-I-2.5A-2DI-P	4		47	9	6

1) Each parameter is transferred individually by a SDO transfer (service data objects). For that reason there is no size limit, nevertheless every transfered parameter prolongs starting up the station.

Coupler-dependent data width of I/O modules UR20-FBC-EC-ECO

Item No.	Module	Configuration	Parameters[1]	Diagnostics	Process data	
					Input	Output
		Bytes	Bytes	Bytes	Bytes	Bytes
2489830000	UR20-1SM-50W-6DI2DO-P	4		47	17	16
2705620000	UR20-2AI-UI-16	4		47	5	–
2566090000	UR20-2AI-UI-16-DIAG	4		47	5	–
1315620000	UR20-4AI-UI-16	4		47	9	–
1315690000	UR20-4AI-UI-16-DIAG	4		47	9	–
1993880000	UR20-4AI-UI-DIF-16-DIAG	4		47	9	–
2544660000	UR20-4AI-UI-DIF-32-DIAG	4		47	17	–
2566960000	UR20-4AI-UI-ISO-16-DIAG	4		47	9	–
1506920000	UR20-4AI-UI-16-HD	4		47	9	–
1506910000	UR20-4AI-UI-16-DIAG-HD	4		47	9	–
1394390000	UR20-4AI-UI-12	4		47	9	–
1529370000	UR20-8AI-I-16-DIAG	4		47	17	–
1315650000	UR20-8AI-I-16-HD	4		47	17	–
1315720000	UR20-8AI-I-16-DIAG-HD	4		47	17	–
1315670000	UR20-8AI-I-PLC-INT	4		47	17	–
1315700000	UR20-4AI-RTD-DIAG	4		47	9	–
2456540000	UR20-4AI-RTD-HP-DIAG	4		47	9	–
1315710000	UR20-4AI-TC-DIAG	4		47	9	–
3233190000	UR20-4AI-TC-CJT-DIAG	4		47	17	–
2001670000	UR20-4AI-R-HS-16-DIAG	4		47	9	–
2555940000	UR20-8AI-RTD-DIAG-2W	4		47	17	–
3039320000	UR20-15AI-U-16-DIAG	4		47	10	1
1990070000	UR20-2AI-SG-24-DIAG	4		47	17	16
2007420000	UR20-3EM-230V-AC	4		47	17	16
2920830000	UR20-3EM-400V-AC-CT1A	4		47	33	8
2920840000	UR20-3EM-400V-AC-CT5A	4		47	33	8
2920850000	UR20-3EM-400V-AC-RC	4		47	33	8
2920860000	UR20-3EM-400V-AC-333mV	4		47	33	8
2705630000	UR20-2AO-UI-16	4		47	1	4
2566100000	UR20-2AO-UI-16-DIAG	4		47	1	4
2566970000	UR20-2AO-UI-ISO-16-DIAG	4		47	1	4
1315680000	UR20-4AO-UI-16	4		47	1	8
2453880000	UR20-4AO-UI-16-M	4		47	1	8
1315730000	UR20-4AO-UI-16-DIAG	4		47	1	8
2453870000	UR20-4AO-UI-16-M-DIAG	4		47	1	8
1510690000	UR20-4AO-UI-16-HD	4		47	1	8
1506930000	UR20-4AO-UI-16-DIAG-HD	4		47	1	8
1315570000	UR20-1CNT-100-1DO	4		47	13	10

1) Each parameter is transferred individually by a SDO transfer (service data objects). For that reason there is no size limit, nevertheless every transfered parameter prolongs starting up the station.

Coupler-dependent data width of I/O modules UR20-FBC-EC-ECO

Item No.	Module	Configuration	Parameters[1)]	Diagnostics	Process data	
					Input	Output
		Bytes	Bytes	Bytes	Bytes	Bytes
1315590000	UR20-2CNT-100	4		47	13	12
1315580000	UR20-1CNT-500	4		47	13	10
1508080000	UR20-2FCNT-100	4		47	21	12
1508090000	UR20-1SSI	4		47	7	–
1315750000	UR20-1COM-232-485-422	4		47	17	16
2826800000	UR20-1COM-232-485-422-V2	4		47	20	19
2007430000	UR20-1COM-SAI-PRO	4		47	1	0
3116480000	UR20-1COM-SAI-PRO-V2	4		47	1	0
1315740000	UR20-4COM-IO-LINK		See manual for UR20-4COM-IO-LINK communication module			
2819690000	UR20-4COM-IO-LINK-V2		See manual for UR20-4COM-IO-LINK communication module			
1529780000	UR20-4DI-4DO-PN-FSOE	4		47	6	6
1529800000	UR20-8DI-PN-FSOE	4		47	6	6
1335060000	UR20-4DI-4DO-PN-FSPS	–		–	–	–
1335070000	UR20-8DI-PN-FSPS	–		–	–	–
1335030000	UR20-PF-O-1DI-SIL	4		47	5	–
1335040000	UR20-PF-O-2DI-DELAY-SIL	4		47	5	–
1335050000	UR20-PF-O-2DI-SIL	4		47	5	–
max. data (in Byte)		1514 pro telegramm + CoE	1514 pro telegramm + CoE	1514 pro telegramm + CoE	1024	1024

1) Each parameter is transferred individually by a SDO transfer (service data objects). For that reason there is no size limit, nevertheless every transfered parameter prolongs starting up the station.

5.15 Modbus TCP fieldbus coupler ECO

ModbusTCP

The UR20-FBC-MOD-TCP-ECO fieldbus coupler are Modbus TCP participants according to IEC 61158. As a head module of the u-remote system bus the coupler supports up to 16 active u-remote modules and up to 8 open multi-client connections.
The two Ethernet ports form an unmanaged 2-port switch that supports a line network structure.
The coupler can be accessed with a system-independent web server application via the Ethernet. Thus, all information, such as diagnostics, status values and parameters, can be read and all connected modules can be simulated or forced.
The station's main power supply is integrated in the coupler. Power is supplied via a 4-pole connector.

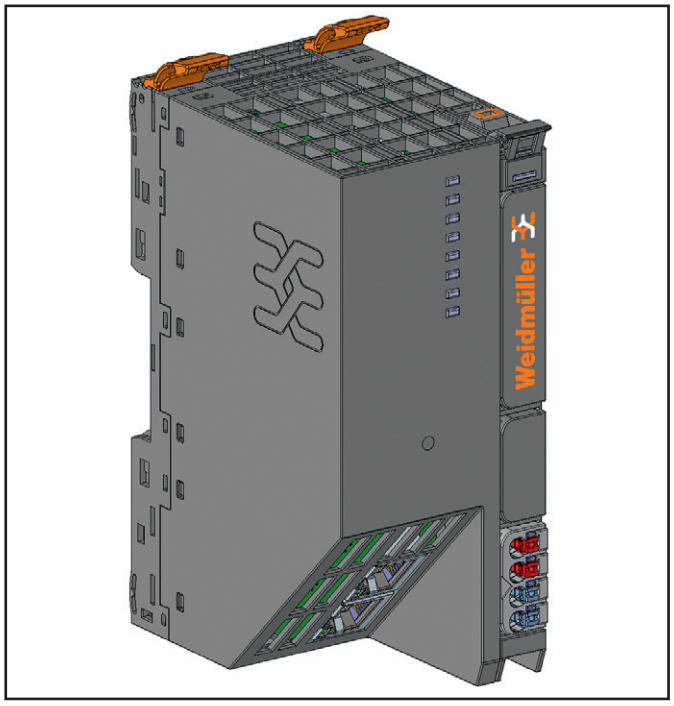

Fieldbus coupler UR20-FBC-MOD-TCP-ECO (Item No. 2659700000)

Status indicators

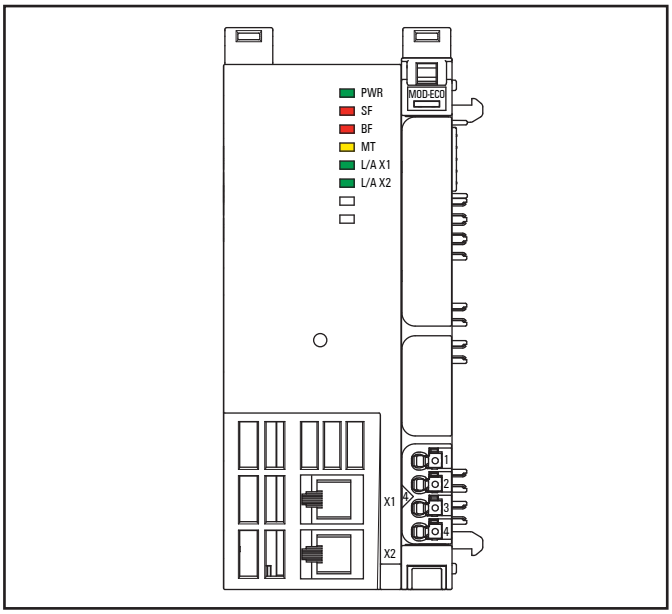

LED status indicators UR20-FBC-MOD-TCP-ECO, troubleshooting see Chapter 12

PWR	Power LED	**Green**: Supply voltage connected **Red:** Coupler not yet started completely or hardware error
SF	Collective error	**Red:** Configuration error, or error in the coupler, or error in a module, or there is a new diagnostic message **Red flashing**: Station in Force mode
BF	Bus failure	**Red:** No connection to the fieldbus or watchdog time expired **Red flashing**: Configuration error, no connection to the control unit, or error in the parameter set, or firmware update is running or IP address conflict
MT	Maintenance	**Yellow**: Error on the system bus or fieldbus
L/A X1	Connection/active	**Green / Yellow**[1)]: Connection established between port 1 of the coupler and another field device **Green flashing / Yellow flashing**[1)]: Data being exchanged on port 1
L/A X2	Connection/active	**Green / Yellow**[1)]: Connection established between port 2 of the coupler and another field device **Green flashing / Yellow flashing**[1)]: Data being exchanged on port 2

1) Green: Transfer rate 100 MBit/s, Yellow: Transfer rate 10 MBit/s

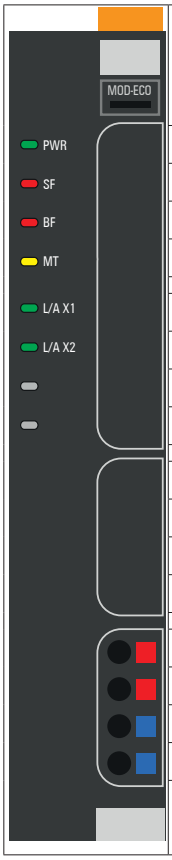

	Coupler power supply LED green: supply voltage >17 V ±1 V red: at at least one current path <17 V ±1 V
4.1	Green: supply voltage > 17 V DC ±1 V
4.2	Red: supply voltage < 17 V DC ±1 V

LED indicators UR20-FBC-MOD-TCP-ECO, troubleshooting see Chapter 12

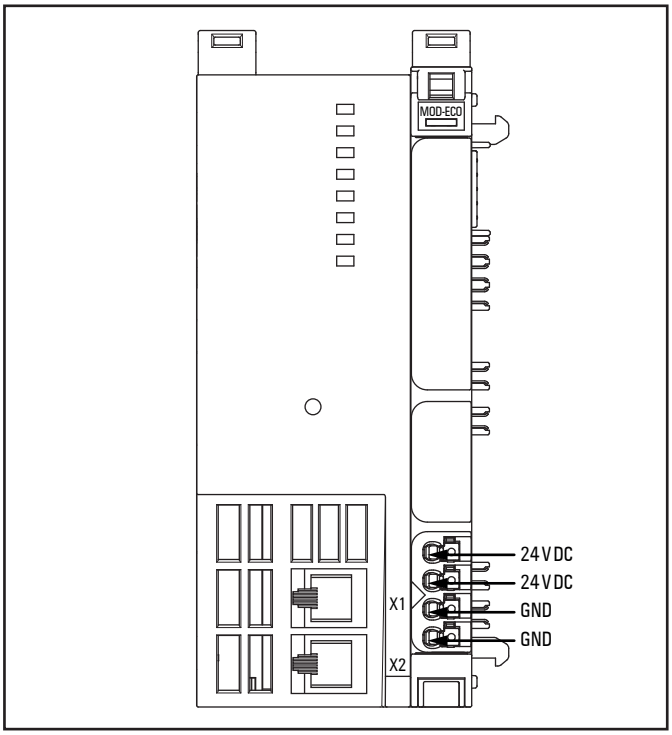

Connection diagram UR20-FBC-MOD-TCP-ECO

ATTENTION

Risk of material damage!
In the case of a maximum power supply of >8 A, all four contacts must be connected with 1.5 mm² wiring!

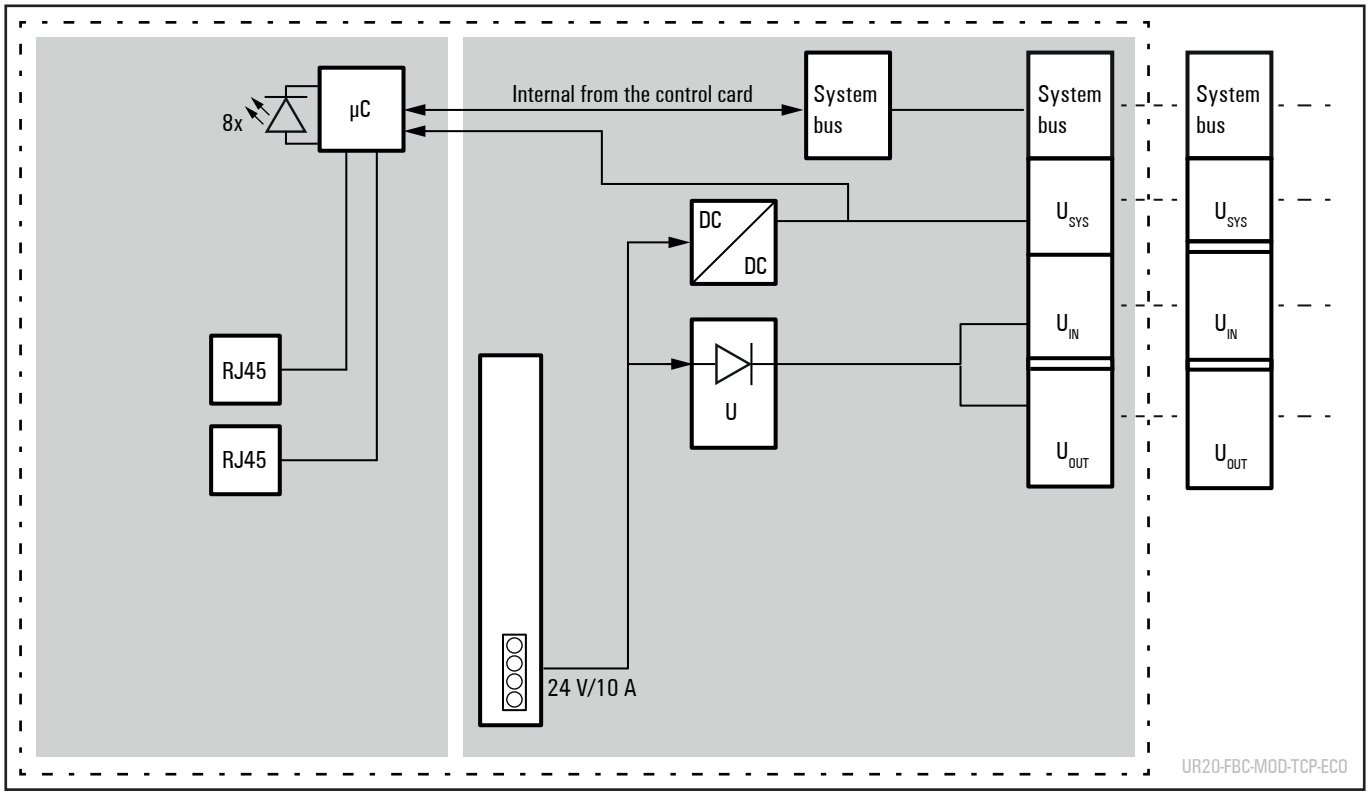

Block diagram UR20-FBC-MOD-TCP-ECO

Technical data UR20-FBC-MOD-TCP-ECO (Item No. 2659700000)

System data		
Connection	2 x RJ-45	
Fieldbus protocol	Modbus TCP	
Open multi-client connections	max. 8	
Process data	max. 1 kByte	
Parameter data	max. 1 kByte	
Diagnostic data	max. 1 kByte	
Number of modules	max. 16 active	
Configuration interface	via RJ45	
Fieldbus interface	Full/Half duplex, Auto MIDI/X, autonegotiation	
Transfer rate	Fieldbus	10 Mbps/100 Mbps
	u-remote system bus	max. 48 Mbps
Supply		
Supply voltage for system, inputs and outputs	24 V DC +20 % / -15 %	
Max. feed-in current	horizontal installation	10 A (0 ... +50 °C / +32 °F ... +122 °F)
	vertical installation	10 A (0 ... +45 °C / +32 °F ... +113 °F), 8 A (0 ... +50 °C / +32 °F ... +122 °F)
Current consumption from system current path I_{SYS}	80 mA	
Temperature data		
Operation (horizontal installation)	0 °C ... +50 °C / +32 °F ... +122 °F (1 x 10 A power supply)	
Operation (vertical installation)	0 °C ... +45 °C / +32 °F ... +113 °F (1 x 10 A power supply)	
Storage, transport	-40 °C ... +85 °C / -40 °F ... +185 °F	
Connection data		
Type of connection	"PUSH IN"	
Conductor cross-section	Single-wired, fine-wired	0.14 ... 1.5 mm² (AWG 26 ... 16)
Weight		
Weight (operational status)	242 g	
General data, see Section 3.2		

The cables to be connected must be temperature resistant up of 65 °C.

The coupler provides only one alarm (process or diagnostic alarm) for each connected module at a time. Subsequent alarms of this module cannot be displayed until a pending alarm has been acknowledged. In the event that a pending alarm is not acknowledged in time the subsequent alarms will not be registered.

Configuration of the IP address

The web server can be used to define whether a static IP address shall be used or the address shall be assigned automatically (DHCP/BootP).
By default, the coupler ist set to **DHCP and Static** with a timeout of 30 s. If no assigment by a DHCP server follows during this waiting time, the static IP address 192.168.0.222 will be set.

Overview of the editable parameters UR20-FBC-MOD-TCP-ECO

Parameter	Optional values	Default
IP address	4 numbers between 0 and 255	192.168.0.222
Subnet mask	4 numbers between 0 and 255	255.255.255.0
Gateway[1)]	4 numbers between 0 and 255	192.168.0.1
Transmission rate port 1 Transmission rate port 2	Auto negotiation / 100 MBit/s FD / 100 MBit/s HD / 10 MBit/s FD / 10 MBit/s HD	Auto negotiation
Broadcast Frame Limit Port 1 [1)] Broadcast Frame Limit Port 2 [1)]	0 ... 255 fpw	8 fpw
IP configuration	DHCP and static, Static, DHCP, BootP	DHCP and static see register 0x1124 – 0x1129 and 0x1140 – 0x1145 on page 249
Modbus DHCP timeout	Waiting time, 1 to 1000 s	30 s
Additional TCP port[1)]	0 (disabled) / Value from 1 to 65535 (except for 80 and 161)	0
Modbus Dual LAN Mode [1), 2)]	disabled / enabled	disabled
Modbus transport protocol [2)]	TCP / UDP	TCP
SNMP	disabled / enabled	disabled
Modbus watchdog	Watchdog time in steps of 10 ms	0 *10 ms, see register 0x1120 on page 249
Modbus connection timeout	Connection watchdog time in sec	1 s, see register 0x1131 on page 250
Writing access in multi-client operation	for all connections, for client with first write access, for client with first connection	for all connections, see register 0x1130 on page 249
Check reference list before data exchange	disabled / enabled	disabled, see register 0x1132 on page 250
HTTPS setting	HTTP & HTTPS concurrent operation / only HTTPS; no HTTP	HTTP & HTTPS concurrent operation
Process alarm	disabled / enabled	disabled, see register 0x1133 on page 250
Diagnostic alarm	disabled / enabled	disabled, see register 0x1134 on page 251
Output behaviour on fieldbus error[1)]	All outputs off / Enable substitute value / Hold last value	All outputs off, see register 0x1135 on page 251
Module behaviour on hot swap	Continue data exchange / Behaviour like fieldbus error	Continue data exchange, see register 0x1136 on page 251
Data format	Motorola / Intel	Motorola, see register 0x1137 on page 251
Lock force mode	Force mode unlocked / Force mode locked	Force mode unlocked, see register 0x1122 on page 249

1) See description below, 2) Change requires restart of the coupler

Parameter "Broadcast Frame Limit"

The limit is defined as frames per window (fpw). A time window is 100 ms at 10M bit/s and 10 ms with100 Mbit/s.

Parameter "Additional TCP port"

Another TCP port additionally to the standard port (502) can be enabled using this parameter. Every number from 1 to 65535 can be used, apart from:

- TCP: 80 (reserved for http), 161 (reserved for SNMP), 443 (reserved for https), 502 (standard TCP port, already in use)
- UDP: 53 (reserved for DNS), 67, 68 (reserved for BootP and DHCP), 161 (reserved for SNMP), 502 (standard UDP port, already in use)

Value 0 deactivates the port. The standard port 502 will remain open in any case.

Parameter "Modbus Dual LAN Mode"

In Dual LAN mode, the fieldbus coupler communicates with two synchronised control units simultaneously. Thereby both control units have the complete reading and writing access. With this parameter enabled, the two Ethernet ports are re-configured into two separate network ports. MAC addresses are automatically assigned to both ports. After restarting the coupler, an additional input mask for the coupler parameters is displayed in the web server, in which the second IP address must be specified.

ATTENTION

Risk of a network loop that can lead to a network failure!

The "Modbus Dual LAN Mode" parameter is deactivated and the 2-port switch is active at delivery.

► Activate the parameter first and then connect the coupler to the network.

Parameter „Modbus transport protocol"

This parameter can be used to determine whether the fieldbus coupler shall be addressed via TCP or UDP. A Modbus connection via the other protocol is not possible. This change only affects the standard port 502 and any port set under „Additional TCP port".

Parameter "Output behaviour on fieldbus error"

With active reference list mode the setting of this parameter has the same impact also on reference list errors.

Implemented modbus functions

Function code no.	Function	Description	See also table
1 (0x01)	Read Coils	Reading of multiple output bits	Bit addresses
2 (0x02)	Read Discrete Inputs	Reading of multiple input bits	Bit addresses
3 (0x03)	Read Holding Registers	Reading of multiple holding registers	Register addresses
4 (0x04)	Read Input Registers	Reading of multiple input registers	Register addresses
5 (0x05)	Write Single Coil	Writing of one output bit	Bit addresses
6 (0x06)	Write Single Registers	Writing of one holding register	Register addresses
15 (0x0F)	Write Multiple Coils	Writing of multiple output bits	Bit addresses
16 (0x10)	Write Multiple Registers	Writing of multiple holding registers	Register addresses
22 (0x16)	Mask Write Register	Bitwise modifying of one holding register	Register addresses
23 (0x17)	Read/Write Multiple Registers	Reading and writing of multiple holding registers simultaneously	Register addresses

Bit addresses for the use with function codes 1, 2, 5, 15

Bit address		Access	Data width	Description	Remarks
hex	dez				
0x0000 – 0x1FFF	0 –8191	ro	Module dependent	Packed process data of inputs	Byte-granular
0x8000 – 0x9FFF	32768 – 40959	rw	Module dependent	Packed process data of outputs	Byte-granular

Register addresses for the use with function codes 3, 4, 6, 16, 22, 23

Register address		Access	Data width	Description	Remarks
hex	dec				
0x0000 – 0x01FF	0 – 511	ro	Module-dependent	Packed process data for inputs	byte granularly
0x0800 – 0x09FF	2048 – 2559	rw	Module-dependent	Packed process data for outputs	byte granularly
0x1000 – x100B	4096 – 4102	ro	Byte	Coupler identifier	
0x100C	4108	ro	Word	Coupler status	Bit assignment see register 0x100C on page 248
0x100D	4109	ro	Word	Life Signal	16 bit counter, 1 ms tick
0x100E	4110	ro	Wort	Port Link Status	Bit assignment see register 0x100E on page 249
0x1010	4112	ro	Word	Process image length in bits for the output modules	
0x1011	4113	ro	Word	Process image length in bits for the input modules	
0x1017	4119	ro	Word	Register mapping revision	
0x1018 – 0x101B	4120 – 4123	ro	Byte	Collective diagnostics message for I/O modules (1 bit per I/O module)	
0x101C – 0x101F	4124 – 4127	ro	Byte	Collective process alarm message for I/O modules (1 bit per I/O module)	
0x1020 – 0x1027	4128 – 4135	ro	Byte	Coupler serial number	
0x1028 – 0x102F	4136 – 4143	ro	Byte	Module status (2 bits per I/O module), 00 = module O.K., 01 = module error, 10 = incorrect module 11 = module not plugged in	Structure as in PROFIBUS module status
0x1030	4144	ro	Word	Modbus watchdog, current time (x*10 ms) 0 = watchdog has expired, 0xFFFF = watchdog deactivated	Time still remaining for monitoring the exchange of process data
0x1120	4384	rw	Word	Modbus watchdog, predefined time (x*10 ms), default = 0 ms (no watchdog active)	Time for monitoring the exchange of process data. The value of the elapsed watchdog time is reset to the start value with each setting of the watchdog time. Therefore this register is not suitable for cyclic write access.

Register addresses for the use with function codes 3, 4, 6, 16, 22, 23

Register address hex	Register address dec	Access	Data width	Description	Remarks
0x1121	4385	rw	Word	Data exchange Modbus watchdog, reset register Bit 0 = 1: watchdog reset at predefined time Bit 8 = 1: restart after expired watchdog	Function requires rising edge (changing from 0 to 1) at the respective bit Bit 0: reset watchdog while it is running (retrigger) Bit 8: restart of expired watchdog
0x1122	4386	rw	DWord	Lock of the force mode via webserver	„LOCK“ to lock, „FREE“ to unlock
0x1124 – 0x1125	4388 – 4389	rw	Long	Changing IP address via fieldbus	
0x1126 – 0x1127	4390 – 4391	rw	Long	Changing subnet mask via fieldbus	
0x1128 – 0x1129	4392 – 4393	rw	Long	Changing gateway via fieldbus	
0x1130	4400	rw	Word	Writing access in multi-client operation	
0x1131	4401	rw	Word	Modbus connection timeout in seconds Default = 1 (0 = dectivated)	
0x1132	4402	rw	Word	Check the reference list before data exchange 0x0000 = disabled, 0x0001 = enabled	
0x1133	4403	rw	Word	Process alarm 0x0000 = disabled, 0x0001 = enabled	
0x1134	4404	rw	Word	Diagnostic alarm 0x0000 = disabled, 0x0001 = enabled	
0x1135	4405	rw	Word	Output behaviour on fieldbus error 0x0000 = all outputs off 0x0001 = enable substitute values 0x0002 = hold last value	
0x1136	4406	rw	Word	Module behaviour on hot swap 0x0000 = continue data exchange 0x0001 = behaviour as on fieldbus error	
0x1137	4407	rw	Word	Data format 0x0000 = Motorola, 0x0001 = Intel	
0x113C – 0x113D	4412 – 4413	wo	DWord	Load default module parameters Motorola =“LOAD”, Intel =“DAOL”	
0x113E – 0x113F	4414 – 4415	wo	DWord	Save module parameters Motorola =“SAVE”, Intel =“EVAS”	
0x1146	4422	rw	Word	Port 1 link setting 0=Autonegotiation, 1=100 MBit/s Full Duplex, 2=100 MBit/s Half Duplex, 3=10 MBit/s Full Duplex, 4=10 MBit/s Half Duplex	
0x1147	4423	rw	Word	Port 2 link setting 0=Autonegotiation, 1=100 MBit/s Full Duplex, 2=100 MBit/s Half Duplex, 3=10 MBit/s Full Duplex, 4=10 MBit/s Half Duplex	
0x1148	4424	rw	Word	DHCP setting, 0=Static, 1=DHCP, 2=BootP, 3=DHCP and static	
0x1149	4425	rw	Word	DHCP setting second network interface in Dual LAN mode, 0=Static, 1=DHCP, 2=BootP, 3=DHCP and static	only available with coupler version V2
0x114A	4426	rw	Word	Modbus DHCP timeout, used with setting “DHCP and static”, 1-1000 seconds	
0x114B	4427	rw	Word	Additional TCP port: 0=deactivated, 1-0xFFFF=additional Port	following ports are not allowed: with TCP: 80, 161, 443, 502 with UDP: 53, 67, 68, 161, 502
0x114C	4428	rw	Word	Modbus Dual LAN mode 0=deactivated, 1=activated	only available with coupler version V2

Register addresses for the use with function codes 3, 4, 6, 16, 22, 23

Register address hex	Register address dec	Access	Data width	Description	Remarks
0x114D	4429	rw	Word	Modbus transport protocol, 0=TCP, 1=UDP	
0x114F	4431	rw	Word	Webserver via Ethernet, 0=deactivated, 1=activated	
0x1150	4432	rw	Word	HTTPS setting, 0=HTTP+HTTPS, 1=only HTTPS	
0x27FE	10238	ro	Word	Number of entries in the current module list	
0x27FF	10239	ro	Word	Number of entries in the reference list	
0x2800 – 0x287F	10240 – 10367	rw	DWord	Reference list (max. 16 modules per station * 2 registers per module)	Always 2 registers per module must be transferred
0x2A00 – 0x2A7F	10752 – 10879	ro	DWord	Current module list (max. 16 modules per station * 2 registers per module)	Always 2 registers per module must be transferred
0x2B00 – 0x2B7F	11008 – 11135	ro	Word	Modul offsets of packed process data	
0x8000 – 0x87FF	32768 – 34815	ro	Module	Process data inputs (max. 16 modules per station * 32 registers per module)	
0x9000 – 0x97FF	36864 – 38911	rw	Module	Process data outputs (max. 16 modules per station * 32 registers per module)	
0xA000 – 0xA7FF	40960 – 43007	ro	Byte	Diagnostics (max. 16 modules per station * 32 registers per module)	Confirmation by readout
0xB000 – 0xB7FF	45056 – 47103	ro	Byte	Process alarms (max. 16 modules per station * 32 registers per module)	Confirmation by readout
0xC000 - 0xFFFF	49152 – 65535	rw	Byte	Module parameters: max. 16 modules per station * 256 registers per module)	

Packed process data

Packed input process data

Input register range: 0x0000 to 0x01FF

Access to all 512 registers is always possible regardless of the I/O structure. Unused registers respond with “0”.

Packed output process data

Output register range: 0x0800 to 0x09FF

Access to all 512 registers is always possible regardless of the I/O structure. Unused registers send “0” during a read access, write accesses are ignored.

Example of an optimal module arrangement

Product	Input data	Output data	Number of input registers	Number of output registers	Remarks
UR20-FBC-MOD	–	–	0	0	
UR20-4AO-UI	–	8 Byte	0	4	allocates 4 registers
UR20-4AI-UI	8 Byte	–	4	0	allocates 4 registers
UR20-4DI-P	1 Byte	–	1/2	0	allocates low byte of a register
UR20-8DI-x	1 Byte	–	1/2	0	allocates high byte of a register
UR20-16DI-x	2 Byte	–	1	0	allocates 1 register
Total			6	4	

Example of a suboptimal module arrangement

Product	Input data	Output data	Number of input registers	Number of output registers	Remarks
UR20-FBC-MOD	–	–	0	0	
UR20-4DI-P	1 Byte	–	1	0	allocates 1 register
UR20-4AO-UI	–	8 Byte	0	4	allocates 4 registers
UR20-4AI-UI	8 Byte	–	4	0	allocates 4 registers
UR20-8DI-x	1 Byte	–	1	0	allocates 1 register
UR20-16DI-x	2 Byte	–	1	0	allocates 1 register
Total			7	4	

Structure of packed process data

The byte granularly packed process data contains all input data (register range 0x0000 to 0x01FF) and output data (register range 0x0800 to 0x09FF) of the u-remote station.

The start address(es) of each module's process data are listet in register 0x2B00 – 0x2B7F (s. section "Module offsets of process data" on page 253).

Process data is mapped according to the modules are arranged. To avoid larger gaps in the process data, the different modules should be arranged in an optimal manner.

Coupler-dependent data width of I/O modules[1] UR20-FBC-MOD-TCP, UR20-FBC-MOD-TCP-V2

Item No.	Module	Process data	
		Input	Output
		Byte	Byte
1315170000	UR20-4DI-P	1	–
2009360000	UR20-4DI-P-3W	1	–
1315180000	UR20-8DI-P-2W	1	–
1394400000	UR20-8DI-P-3W	1	–
1315190000	UR20-8DI-P-3W-HD	1	–
1315200000	UR20-16DI-P	2	–
1315210000	UR20-16DI-P-PLC-INT	2	–
1460140000	UR20-2DI-P-TS	1	–
1460150000	UR20-4DI-P-TS	1	–
1315350000	UR20-4DI-N	2	–
1315370000	UR20-8DI-N-3W	2	–
1315390000	UR20-16DI-N	1	–
1315400000	UR20-16DI-N-PLC-INT	1	–
1550070000	UR20-4DI-2W-230V-AC	1	–
2457240000	UR20-8DI-ISO-2W	1	–
1315220000	UR20-4DO-P	-	1
1315230000	UR20-4DO-P-2A	-	1
1394420000	UR20-4DO-PN-2A	-	1
1315240000	UR20-8DO-P	-	1
1509830000	UR20-8DO-P-2W-HD	-	1
1315250000	UR20-16DO-P	-	2
1315270000	UR20-16DO-P-PLC-INT	-	2
1315410000	UR20-4DO-N	-	1
1315420000	UR20-4DO-N-2A	-	1
1315430000	UR20-8DO-N	-	1
1315440000	UR20-16DO-N	-	2
1315450000	UR20-16DO-N-PLC-INT	-	2
2457250000	UR20-4DO-ISO-4A	-	1
2456530000	UR20-8DIO-P-3W-DIAG	1	1
1315540000	UR20-4RO-SSR-255	–	1
1315550000	UR20-4RO-CO-255	–	1
1315600000	UR20-2PWM-PN-0.5A	4	12
3036960000	UR20-2PWM-PN-0.5A-V2	4	12
1315610000	UR20-2PWM-PN-2A	4	12
3036950000	UR20-2PWM-PN-2A-V2	4	12
2697910000	UR20-2PWM-I-2.5A-2DI-P	8	6
2489830000	UR20-1SM-50W-6DI2DO-P	16	16
2705620000	UR20-2AI-UI-16	4	–
2566090000	UR20-2AI-UI-16-DIAG	4	–

1) Listed are only supported modules, see table **Combinability of UR20 fieldbus couplers with I/O modules** in the Annex.

Coupler-dependent data width of I/O modules[1] UR20-FBC-MOD-TCP, UR20-FBC-MOD-TCP-V2

Item No.	Module	Process data	
		Input	Output
		Byte	Byte
1315620000	UR20-4AI-UI-16	8	–
1315690000	UR20-4AI-UI-16-DIAG	8	–
1993880000	UR20-4AI-UI-DIF-16-DIAG	8	–
2544660000	UR20-4AI-UI-DIF-32-DIAG	16	–
2566960000	UR20-4AI-UI-ISO-16-DIAG	8	–
1506920000	UR20-4AI-UI-16-HD	8	–
1506910000	UR20-4AI-UI-16-DIAG-HD	8	–
1394390000	UR20-4AI-UI-12	8	–
1529370000	UR20-8AI-I-16-DIAG	16	–
1315650000	UR20-8AI-I-16-HD	16	–
1315720000	UR20-8AI-I-16-DIAG-HD	16	–
1315670000	UR20-8AI-I-PLC-INT	16	–
1315700000	UR20-4AI-RTD-DIAG	8	–
2456540000	UR20-4AI-RTD-HP-DIAG	8	–
1315710000	UR20-4AI-TC-DIAG	8	–
3233190000	UR20-4AI-TC-CJT-DIAG	16	–
2001670000	UR20-4AI-R-HS-16-DIAG	8	–
2555940000	UR20-8AI-RTD-DIAG-2W	16	–
3039320000	UR20-15AI-U-16-DIAG	9	1
1990070000	UR20-2AI-SG-24-DIAG	16	16
2007420000	UR20-3EM-230V-AC	16	16
2920830000	UR20-3EM-400V-AC-CT1A	32	8
2920840000	UR20-3EM-400V-AC-CT5A	32	8
2920850000	UR20-3EM-400V-AC-RC	32	8
2920860000	UR20-3EM-400V-AC-333mV	32	8
2705630000	UR20-2AO-UI-16	-	4
2566100000	UR20-2AO-UI-16-DIAG	-	4
2566970000	UR20-2AO-UI-ISO-16-DIAG	–	4
1315680000	UR20-4AO-UI-16	–	8
1315730000	UR20-4AO-UI-16-DIAG	–	8
1510690000	UR20-4AO-UI-16-HD	–	8
1506930000	UR20-4AO-UI-16-DIAG-HD	–	8
1315570000	UR20-1CNT-100-1DO	12	10
1315590000	UR20-2CNT-100	12	12
1315580000	UR20-1CNT-500	8	10
1508080000	UR20-2FCNT-100	20	12
1508090000	UR20-1SSI	6	–
1315750000	UR20-1COM-232-485-422	16	16

1) Listed are only supported modules, see table **Combinability of UR20 fieldbus couplers with I/O modules** in the Annex.

Coupler-dependent data width of I/O modules[1] UR20-FBC-MOD-TCP, UR20-FBC-MOD-TCP-V2

Item No.	Module	Process data	
		Input	Output
		Byte	Byte
2826800000	UR20-1COM-232-485-422-V2	19	19
2007430000	UR20-1COM-SAI-PRO	–	–
3116480000	UR20-1COM-SAI-PRO-V2	–	–
1335030000	UR20-PF-O-1DI-SIL	4	–
1335040000	UR20-PF-O-2DI-DELAY-SIL	4	–
1335050000	UR20-PF-O-2DI-SIL	4	–

1) Listed are only supported modules, see table **Combinability of UR20 fieldbus couplers with I/O modules** in the Annex.

0x1000 – 0x1006 (4096 - 4102) Coupler identifier

The identifier is the "product designation":
UR20-FBC-MOD-TCP-ECO.

0x100C (4108) Coupler status

Bit	Name	Meaning
0	Summarized module diagnosis	A diagnosis is available on at least one module with diagnostics functionality.
1	Errorbit 1	Reserve bit 1, currently not used
2	Errorbit 2	Reserve bit 2, currently not used
3	Systembus error	Error on system bus. Communication with the connected modules is disrupted.
4	Errorbit 4	Reserve bit 4, currently not used
5	Errorbit 5	Reserve bit 5, currently not used
6	I/O-Configuration error	Differing configuration. The module list has changed. The list of configured modules (reference list 0x2800 – 0x287F) differs from the module list detected by the coupler (current module list 0x2A00 – 0x2A7F).
7	Master configuration error	Master configuration error. The station contains modules which are not supported by the coupler (see data width table).
8	Register access error	Access on invalid Modbus register. Reading out 0x100C resets the error bit.
9	Errorbit 9	Reserve bit 9, currently not used
10	Force mode active	Force mode was activated via the web server. Forced channels do not exchange data with the master.
11	Errorbit 11	Reserve bit 11, currently not used
12	Errorbit 12	Reserve bit 12, currently not used
13	Errorbit 13	Reserve bit 13, currently not used
14	Voltage error	Error in the supply voltage
15	Errorbit 15	Reserve bit 15, currently not used

0x100D (4109) Life Signal

0x100E (4110) Port Link Status
Bit 0: Port 1 Link Status (1 Link up, 0 Link down)
Bit 1: Port 2 Link Status (1 Link up, 0 Link down)

0x1010 (4112) Process image length in bits for the output modules

0x1011 (4113) Process image length in bits for the input modules

0x1017 (4119) Register – mapping revision
Version of the register structure

0x1018 – 0x101B (4120 - 4123) Collective diagnostics message for I/O modules
If a diagnostic alarm is activated (register 0x1134) and there is a diagnostic message for a module, it is indicated here with a set bit. A module's slot position corresponds to its position in the 64-bit data field (minus passive modules without slot recognition). Example: 0x0000 0000 0000 0002 = There is a diagnostic alarm for module 2.
Reading the module's diagnostic memory (0xAXXX) confirms the diagnosis and resets the corresponding bit. In case of multiple diagnoses for one module, only the most up-to-date diagnosis is displayed. The next diagnostic is then placed in a wait loop and only becomes active once the current one has been confirmed.

0x101C – 0x101F (4124 - 4127) Collective process alarm message for the I/O modules
If a process alarm is activated (register 0x1133) and there is an alarm for a module, this is indicated here with a set bit. A module's slot position corresponds to its position in the 64-bit data field (minus passive modules without slot recognition). Example: 0x0000 0000 0000 0002 = There is a process alarm for module 2.
Reading the module's process alarm memory (0xBXXX) confirms the alarm and resets the corresponding bit. In case of multiple process alarms for one module, only the latest alarm is displayed. The next alarm is then placed in a wait loop and only becomes active once the current one has been confirmed.

0x1028 – 0x102F (4136 - 4143) Module status
The module status (2 bits per module) of each detected module is displayed in the corresponding bit position of the 128 bits.

0 0	Valid data from this module
0 1	Invalid data, faulty module
1 0	Invalid data, incorrect module
1 1	Invalid data, missing module

There is no differentiation between fully functional modules and empty slots (both status "0 0"). Please check the reference list (0x1132) or read the number of entries in the current module list (0x27FE) to make sure that all modules have been detected.

0x1030 (4144) MODBUS DATA EXCHANGE watchdog, current time
Amount of time (input value * 10 ms) still remaining on the active watchdog to monitor the exchange of process data. If a 0 is read, the watchdog has expired and must be restarted.
If 0xFFFF is read, the watchdog is deactivated.

0x1120 (4384) Status Modbus watchdog, predefined time
In this register, the watchdog is activated/deactivated and the watchdog time is set. Process data can be exchanged as long as the watchdog is deactivated or it is activated and still running. Each write access causes the reset and restart of the watchdog. The length is calculated with the input value * 10 ms. Entering 0 deactivates the watchdog.

0x1121 (4385) Data exchange Modbus watchdog Reset Register
With a rising edge at Bit 0 in this register the predefined time is loaded into the watchdog time (watchdog reset). To continue the process data exchange with activated watchdog this bit has to be toggled from 0 to 1 once during each watchdog cycle within the defined time.
With a rising edge at Bit 8 in this register an expired watchdog (value 0 in register 0x1030) is reactivated.

0x1122 (4386) Lock force mode on web server
In default setting the force mode can be enabled via the web server (after Login).
The force mode can be locked by writing the double word "LOCK" (0x4C4F, 0x434B). Writing of "FREE" (0x4652, 0x4545) will unlock the force mode again.
Reading 0x00000100 from this register indicates that the force mode is locked via web server. Reading 0x00000000 from this register indicates that the force mode is unlocked via web server.

0x1124 – 0x1125 (4388 - 4389) and 0x1140 – 0x1145 (4416 - 4421) Changing the IP address via fieldbus
The IP address can be displayed and changed via fieldbus. Example:

IP address decimal	192	168	10	100
IP address hexadecimal	C0	A8	A	64
Input in register no.	**0x1124**		**0x1125**	
hexadecimal	C0A8		A64	
decimal	49320		2660	

To prevent the IP address from being changed accidentally, a change is only possible according to the procedure described below.

Example: The address shall be changed from 192.168.1.1 to 192.168.2.1.

1. Change the subnet mask (e.g. to 255.255.0.0) in register 0x1126 – 0x1127.
2. Change the IP address (e.g. to 192.168.2.1) in register 0x1124 – 0x1125.
3. Change the gateway (e.g. to 192.168.2.x) in register 0x1128 – 0x1129.
4. Change back the subnet mask (to 255.255.255.0) in register 0x1126 – 0x1127.

0x1126 – 0x1127 (4390 - 4391) Changing the subnet mask via fieldbus

The subnet mask can be displayed and changed via fieldbus (input analogue example IP address).

0x1128 – 0x1129 (4392 - 4393) Changing the gateway via fieldbus

The gateway can be displayed and changed via fieldbus (input analogue example IP address)..

0x1131 (4401) Modbus connection timeout in seconds

This register determines after which time an inactive modbus connection will be disconnected. If the value in this register is set to 0 the connection timeout will be deactivated.

0x1132 (4402) Check reference list prior to data exchange

If the value in this register is set to 0, the data exchange begins without checking the reference list (0x2800 and the following) against the current module list (0x2A00 and the following). In this case the reference list does not need to be created.
If the value in this register is set to 1, the data exchange only starts if the reference list (0x2800 and the following) matches the current module list (0x2A00 and the following). As long as both lists do not match the fieldbus coupler reacts like on a fieldbus error (0x1135).

0x1133 (4403) Process alarm

If the value in this register is set to 0, process alarms are reported, but it is not necessary to confirm or read them.
If the value in this register is set to 1, process alarms are reported and they must be confirmed by reading the corresponding register.

0x1130 (4400) Writing access in multi-client operation

Bit	Name/Description
2 to 15	**reserved**
1	**MB_ImmediateWritePermission**
	– 0: During the first write access, write authorisation is requested for the corresponding modbus connection. If this is not successful, an exception response with the exception code 0x01 is generated. If it is successful, the write access is executed and write authorisation remains in effect until the end of the connection. – 1: Write authorisation for the corresponding modbus connection is already requested when the connection is being established. As a result, the first modbus connection receives the write authorisation, and nothing happens for all those that follow (as long as Bit 0 = 1).
0	**MB_OnlyOneWritePermission**
	– 0: All modbus connections have write authorisation – 1: In all cases only one modbus connection can be assigned write authorisation. Once assigned, write authorisation is retained until there is a disconnect. After the connection that has write authorisation is disconnected, the next connection which attempts write access receives write authorisation.

0x1134 (4404) Diagnostic alarm

If the value in this register is set to 0, the diagnostic alarm is deactivated. Pending diagnostics do not have any effect on the exchange of process data and must not be confirmed. They are, however, displayed locally on the UR20 hardware with red LEDs (SF and module) and also can be read in the module-specific diagnostic registers 0xAXXX.
If the value in this register is set to 1, diagnostics alarms are reported, and they must be confirmed by reading the corresponding register.

0x1135 (4405) Field bus or reference list error behaviour

The value in this register defines the output behaviour on fieldbus or reference list error.

Value	Behaviour of outputs
0	All outputs are set to 0.
1	All outputs are set to the substitute values.
2	All outputs are held at the last process value.

0x1136 (4406) Module removal behaviour

If the value in this register is set to 0, the exchange of process data continues.
If the value in this register is set to 1, the behaviour during a field bus error is used.

0x1137 (4407) Data format

If the value in this register is set to 0, data is transferred in Motorola format.
If the value in this register is set to 1, data is transferred in Intel format.

0x113C – 0x113F (4412 - 4413) Save module parameters

Load default module parameters (0x113C – 0x113D) loads the default parameter set of all modules (LOAD). Previously saved parameters are deleted.
Save module parameters (0x113E – 0x113F) stores the current values of all module parameters in the coupler (SAVE). Subsequent changes will not be considered unless they are saved again. There is no need to enter parameters again after restarting the coupler.
Input in both register in the **Motorola** format follow this scheme:

	„LOAD“				„SAVE“			
Letter of the alphabet	L	O	A	D	S	A	V	E
ASCII code decimal	076	079	065	068	083	065	086	069
ASCII hexadecimal	4C	4F	41	44	53	41	56	45
Input in register no.	**0x113C**		**0x113D**		**0x113E**		**0x113F**	
Hexadecimal	4C4F		4144		5341		5645	
Decimal	19535		16708		21313		22085	

Input in both register in the **Intel** format follow this scheme:

	„DAOL“				„EVAS“			
Letter of the alphabet	D	A	O	L	E	V	A	S
ASCII code decimal	068	065	079	076	069	086	065	083
ASCII hexadecimal	44	41	4F	4C	45	56	41	53
Input in register no.	**0x113C**		**0x113D**		**0x113E**		**0x113F**	
Hexadecimal	4441		4F4C		4556		4153	
Decimal	17473		20300		17750		16723	

The status of the saved module parameters can be observed via the web server.

0x27FE (10238) Number of entries in the current module list

This displays the number of modules that were connected when the coupler was started.

0x27FF (10239) Number of entries in the reference list

This displays the number of modules that were entered into the reference list.

0x2800 – 0x287F (10240 - 10367) Reference list
Each module identifier is made up of 4 bytes (2 registers) (see the overview of module IDs in the annex). If a 1 is set in register 1132, the reference list must be identical to the current module list before the data exchange can begin.

0x2A00 – 0x2A7F (10752 - 10879) Current module list
Each module identifier is made up of 4 bytes (2 registers) (see the Overview of module IDs in the annex). The modules that were connected when the coupler was started are entered here. To simplify configuration, the current module list can be copied into the reference list.

0x2B00 – 0x2B7F (11008 - 11135) Module offsets of process data

For each module there are two registers reserved to indicate the offset between the start address within the packed process data and the address 0x0000: The first register indicates the bit-offset of the outputs, the second one indicates the bit-offset of the inputs. Thus, it is possible to use these information directly for the access to coils or Descrete Inputs. Converting the address syntax is necessary for a register-wise access (see table “Implemented modbus functions”).
In case there are no outputs or inputs, the register entry is 0xFFFF.

Example: For an arrangement of coupler, UR20-4AI-RTD-DIAG, UR20-1CNT-100-1DO, UR20-16DO-P the six registers 0x2B00 to 0x2B05 deliver the values 0xFFFF 0x0000 | 0x8000 0x0040 | 0x8050 0xFFFF.

Since the first module has not outputs and the last module has no inputs, the entry of the respective registers is 0xFFFF. The value 0x8050 indicates that the access to the first output of the UR20-16DO-P can be realised via address 0x8050, bit 0. The value 0x0040 indicates, that the first input of the UR20-1CNT-100-1DO is accessible via the address 0x0040, bit 0.

0x8000 – 0x87FF (32768 - 34815) Process data inputs
For each module a data length of 64 bytes (32 registers) is reserved.
Example: Module 3 starts at address 0x8040.

0x9000 – 0x97FF (36864 - 38911) Process data outputs
For each module a data length of 64 bytes (32 registers) is reserved.
Example: Module 3 starts at address 0x9040.

0xA000 – 0xA7FF (40960 - 43007) Diagnostics
For each module a diagnostics data length of 64 bytes (32 registers) is reserved.
Example: Module 3 starts at address 0xA040.
In case of a diagnostics message, the 47 bytes of the module diagnosis are entered here from the corresponding tables (see the table of diagnostic data in the corresponding module description in the module chapter).
If a 1 is set in register 0x1134, reading out the corresponding diagnosis results in a confirmation of the alarm.

0xB000 – 0xB7FF (45056 - 47103) Process alarms
For each module a process alarm data length of 64 bytes (32 registers) is reserved.
Example: Module 3 starts at address 0xB040.
In case of a process alarm, the 4 bytes of the module are entered here from the corresponding table (see the table of process alarms in the corresponding module description in the module chapter).

0xC000 –0xFFFF (49152 - 65535) Parameters
For each module a parameter data length of 256 registers is reserved. Example: Module 3 starts with address 0xC200.
The modules can be parameterised via the web server or via the Modbus master.
One register is assigned to each module parameter with a size of max. 16 bit. 32 bit parameters use two subsequent registers (consider Motorola format!). The sequence of parameters as well as the optional values are listed in the parameter tables of the individual module descriptions (s. Chapter 6).
Example: Parameter 8 of module 3 has the address 0xC207 (provided that there is no 32 bit parameter prior to it in the same module).
Examples for 32 bit parameters are “Period duration“ of the pulse width modulation modules and „End value“ of the counter modules.

5.16 EtherNet/IP fieldbus coupler ECO

The UR20-FBC-EIP-ECO fieldbus coupler is an EtherNet/IP™ participant developed according to IEC 61158. The coupler is the head module for the u-remote system bus, to which up to 16 active u-remote modules can be connected. The EtherNet/IP coupler has two Ethernet ports, and the integrated switch supports a line network structure.

The coupler can be accessed with a system-independent web server application via the Ethernet. Thus all information, such as diagnostics, status values and parameters, can be read and all connected modules can be simulated or forced.

The station's main power supply is integrated in the coupler. Power is supplied via a 4-pole connector.



Fieldbus coupler UR20-FBC-EIP-ECO (Item No. 2799510000)

Status indicators

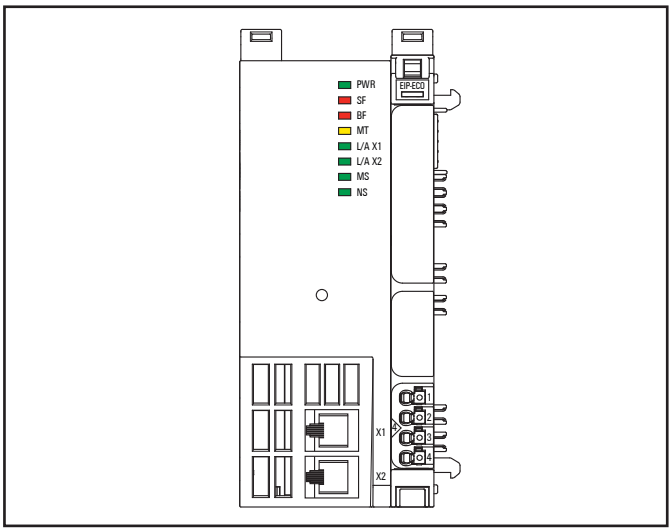

LED status indicators UR20-FBC-EIP-ECO, troubleshooting see Chapter 12

PWR	Power-LED	**Green**: Supply voltage connected **Red:** Coupler not yet started completely or hardware error
SF	Collective error	**Red:** Configuration error, or error in the coupler, or error in a module, or there is a new diagnostic message **Red flashing**: Station in Force mode
BF	Bus failure	**Red**: No fieldbus connection **Red flashing**: Configuration error, no PLC connection or parameter set error or firmware update is running
MT	Maintenance	**Yellow**: Error in the system bus or fieldbus error
L/A X1	Connection/ active	**Green/Yellow**[1)]: Connection established between port X1 of the coupler and another field device **Green flashing/Yellow flashing**[1)]: Data being exchanged on port X1
L/A X2	Connection/ active	**Green/Yellow**[1)]: Connection established between port X2 of the coupler and another field device **Green flashing/Yellow flashing**[1)]: Data being exchanged on port X2
MS	Module status	**Red**: More than one module does not fit the start-up configuration **Red flashing**: One module does not fit the start-up configuration or there is a diagnostic alarm on at least one module **Green**: Ready for operation **Green flashing**: Coupler not configured **Red/green flashing**: LED self test during start
NS	Network status	**Off:** No IP address assigned **Red**: IP address conflict **Red flashing**: Timeout of the exclusive owner connection **Green**: At least one EtherNet/IP connection is established **Green flashing**: No EtherNet/IP connection is established **Red/green flashing**: LED self test during start
1) Green: Transfer rate 100 MBit/s, Yellow: Transfer rate 10 MBit/s		

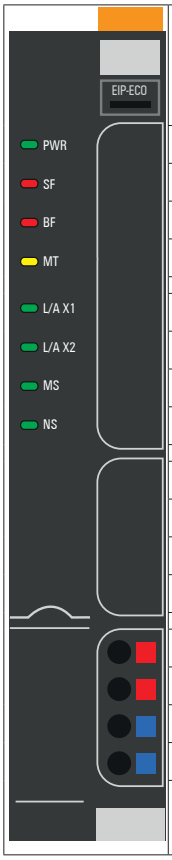

	Coupler power supply LED green: supply voltage >17 V red: at at least one current path <17 V
4.1	Green: supply voltage > 17 V DC
4.2	Red: supply voltage < 17 V DC

LED indicators UR20-FBC-EIP-ECO, troubleshooting see Chapter 12

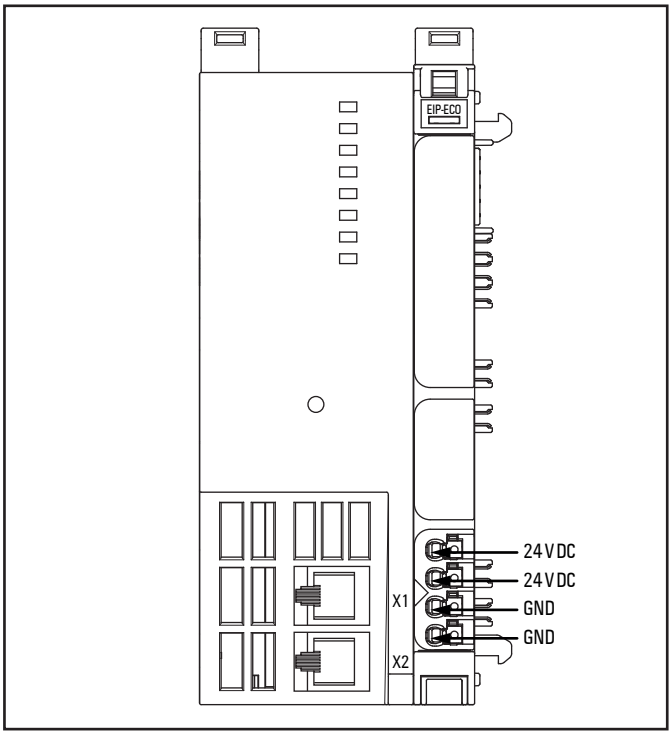

Connection diagram UR20-FBC-EIP-ECO

ATTENTION

Risk of material damage!

In the case of a maximum power supply of >8 A and a maximum temperature of >+55 °C, all four contacts must be connected with 1.5 mm² wiring!

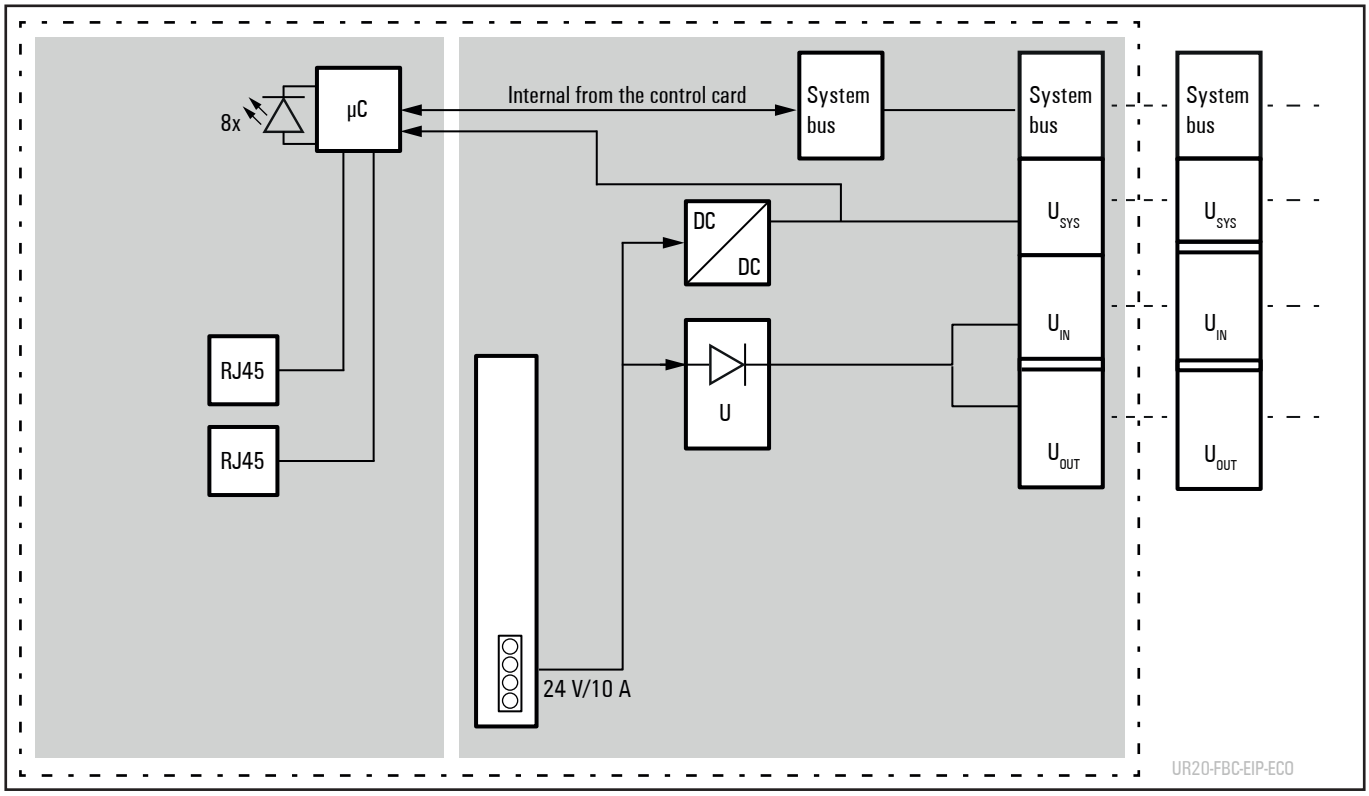

Block diagram UR20-FBC-EIP-ECO

Technical data UR20-FBC-EIP-ECO (Item No. 2799510000)

System data		
Connection	2 x RJ-45	
Fieldbus protocol	EtherNet/IP, see table “Supported Ethernet/IP services“	
Process data	max. 2 x 494 byte	
Parameter data	max. 16 x 64 byte	
Diagnostic data	max. 16 x 47 byte	
Number of modules	max. 16 active	
Configuration interface	via RJ45	
Fieldbus interface	Full/Half duplex, Auto MIDI/X, autonegotiation	
Transfer rate	Fieldbus	10 Mbps / 100 Mbps
	u-remote system bus	max. 48 Mbps
Supply		
Supply voltage for system, inputs and outputs	24 V DC +20% / -15%	
Max. feed-in current	horizontal installation	10 A (0 … +50 °C / +32 °F … +122 °F)
	vertical installation	10 A (0 … +45 °C / +32 °F … +113 °F) 8 A (0 … +50 °C / +32 °F … +122 °F)
Current consumption from system current path I_{SYS}	61 mA	
Temperature data		
Operation (horizontal installation)	0 °C … +50 °C / +32 °F … +122 °F (1 x 10 A power supply)	
Operation (vertical installation)	0 °C … +45 °C / +32 °F … +113 °F (1 x 10 A power supply)	
Storage, transport	-40 °C … +85 °C / -40 °F … +185 °F	
Connection data		
Type of connection	„PUSH IN“	
Conductor cross-section	Single-wired, fine-wired	0,14 … 1,5 mm² (AWG 26 … 16)
Weight		
Weight (operational status)	242 g	
General data, see Section 3.2		

The cables to be connected must be temperature resistant up of 65 °C.

Supported EtherNet/IP-Services

Classes	0x01	0x02	0x04	0x06	0x52	0x64	0x65	0x66	0x67	0xF5	0xF6
Instance 0											
GetAll (0x01)	x	x		x						x	x
SetAll (0x02)											
Reset (0x05)											
MultipleServices (0x0A)											
Get (0x0E)	x	x	x	x	x	x	x	x	x	x	x
Set (0x10)											
FwdClose (0x4E)											
FwdOpen(0x54)											
GetOwner (0x5A)											
Large FwdOpen (0x5B)											
From instance 1 on											
GetAll (0x01)	x	x		x					x	x	x
SetAll (0x02)				x					x	x	
Reset (0x05)	x										
MultipleServices (0x0A)		x									
Get (0x0E)	x	x	x	x	x	x	x	x	x	x	x
Set (0x10)			x	x	x	x	x	x	x	x	x
FwdClose (0x4E)				x							
FwdOpen(0x54)				x							
GetOwner (0x5A)				x							
Large FwdOpen (0x5B)				x							

Overview of the editable parameters UR20-FBC-EIP-ECO

Parameter	Optional values	Default
Operating mode	Block device (Standard) / Modular device (CIP Bridging)	Block device
IP configuration	DHCP, BootP, Static, DHCP and Static	DHCP and Static
IP address	4 numbers between 0-255	0.0.0.0
HTTPS setting	HTTP & HTTPS concurrent operation / only HTTPS; no HTTP	HTTP & HTTPS concurrent operation
Subnet mask	4 numbers between 0-255	255.255.255.0
Gateway	4 numbers between 0-255	0.0.0.0
Save module parameters[1)]	no / yes / Standard	no
Process alarm	disabled (0) / enabled (1)	disabled
Diagnostic alarm	disabled (0) / enabled (1)	disabled
Output behaviour on fieldbus error	All outputs off (0) / Enable substitute values (1) / Hold last value (2)	All outputs off
Output behaviour on idle state	All outputs off (0) / Enable substitute values (1) / Hold last value (2)	All outputs off
Module behaviour on hot swap	Continue data exchange (0) / Behaviour like fieldbus error (1)	Continue data exchange
Data format	Motorola (0) / Intel (1)	Intel
Lock force mode	Force mode unlocked / Force mode locked	Force mode unlocked

1) See description below.

Parameter "Save module parameter" in the web server

The choice of the options "Yes" and "Standard" cannot be displayed in the web server, caused by the data structure of this parameter. The display will be reset to "No" anytime.
Option "Yes": The current image of all module parameters is saved in the coupler and will be sent to the modules again during the coupler's next restart. Subsequent changes of the module parameters are considered and saved only if the option "Yes" will be chosen again.
Option "Standard": The default parameters will be loaded to the modules immediately. Subsequent changes of the module parameters are possible, but they will get loss during the coupler's next restart.

Parameter "Boot module parameters"

This parameter is not editable. It will be automatically set to "Restored values" as soon as the coupler will have sent saved parameter data to the modules.

IP-Configuration, Assignment of IP addresses

The default setting for assigning the IP address is **DHCP and Static**. An attempt is made to obtain an address via DHCP. If no address is received via DHCP after 30 seconds, the IP address 192.168.0.222 is used statically and it will be continually asked for an address via DHCP.
Other options are **DHCP**, **BootP** or **Static**. For automatic addressing via DHCP or BootP, a corresponding server must be available in the network.
The mode for assigning the IP address can be changed via the web server or via the field bus. The **DHCP and Static** mode can only be set via the web server.

Changing the mode of IP mapping via the fieldbus

Providing that the coupler has already received an address, the mode of IP assignment ca be changed via the following data object: TCP/IP object 0xF5 (245), instance 0x01 (1), attribute 0x03 (3). The options are **Static** [0], **BootP** [1] or DHCP [2].
When switching to mode **Static**, the coupler will keep the address that has been assigned automatically before; this address will be saved permanently.
When switching to an automatic mode the coupler will start a request on the respective server immediately.

Allocating a new IP address

A new IP address can be allocated via the following data object: TCP/IP object 0xF5 (245), instance 0x01 (1), attribute 0x05 (5). The new address will be saved permanently, if the mode **Static** is set. Using the automatic assignment the address will be used temporarily only.

Address Conflict Detection

After an address has been allocated to the coupler, it will be checked whether this address is already used within the network (**ACD**, Address Conflict Detection). In case an address conflict is detected and the address is rejected, the coupler requests another address from the DHCP server, as long as DHCP mode is active. When using mode BootP or Static, the coupler must be disconnected from the Ehternet and connected again.
The address check is executed every two minutes during operating. It can be turned off via the following data object: TCP/IP object 0xF5 (245), instance 0x01 (1), attribute 0x0A (10).

Data types UR20-FBC-EIP-ECO

Data type	Size	Value range
USINT	1 byte	0 ... 255
UINT	2 byte	0 ... 65535
UDINT	4 byte	0 ... (2^{32}-1)
BOOL	1 bit	
BYTE	8 bits	
WORD	16 bits	
DWORD	32 bits	
STRING	2 byte length indicator, 1 byte per character	
SHORT_STRING	1 byte length indicator, 1 byte per character	
STRING	Structure of Strings	
Padded EPATH		
Packed EPATH		

Configuration assembly

The CLP can be configured in such a way that the configuration assembly 0x7A (122) or 0x7B (123) will be transmitted during connection buildup. The length of assembly 0x7A is variable depending on the module configuration, assembly 0x7B has a fixed length of 400 Bytes. Two connections using the configuration assembly 0x7B are defined in the EDS file (from release 1.1 on).
Writing access to the data attribute of the configuration assembly is not possible during an established connection. To change the station's parameters during an established connection you can use attribute 0x73 of the gateway object or of the slot objects. Alternatively the u-remote station can be configured via the web server, as long as no fieldbus connection is active.
The configuration assembly includes an 8 byte bit mask (equivalent 64 bit) followed by the parameters of all mod-

ules. For each module containing parameters a „1“ is set at the corresponding position of the bit mask. The sequence corresponds with the modules' sequence within the station, starting with byte 0, bit 0 for slot 1 (first module). After that the parameters of modules with a 3 byte header will follow: 1 byte length and 2 byte for the upper 16 bit of the module ID. The parameter data are not checked for validity in the coupler, but only in the module, if possible. If an error is detected, a diagnosis with “Parameter error” is sent.



When writing the parameter data, please make sure that they are valid. This will be achieved by setting the parameters in the web server and reading out the parameter data record.

Structure of the configuration assembly UR20-FBC-EIP-ECO

Byte	Bit 7	Bit 6	Bit 5	Bit 4	Bit 3	Bit 2	Bit 1	Bit 0
0	M 8	M 7	M 6	M 5	M 4	M 3	M 2	M 1
1	M 16	M 15	M 14	M 13	M 12	M 11	M 10	M 9
2	0	0	0	0	0	0	0	0
3	0	0	0	0	0	0	0	0
4	0	0	0	0	0	0	0	0
5	0	0	0	0	0	0	0	0
6	0	0	0	0	0	0	0	0
7	0	0	0	0	0	0	0	0
8	Parameter length of the first module that includes parameters							
9	Module ID							
10	Module ID							
11	Parameter							
...	...							
	Parameter length of the next module that includes parameters							
	Module ID							
	Module ID							
	Parameter							
...	...							

Parameterising via module parameter class 0x67

Each module parameter corresponds to one attribute starting from attribute 0x65. The number of attributes depends on the type of module. The ID of the last parameter attribute of a module can be read via attribute 0x64. The attribute data type (USINT, UINT or UDINT) depends on the parameter to be set. The parameter order as well as the possible values can be found in the parameter tables within each module description (see Chapter 6).
Class 0x67 supports the services “Get_Attributes_All” and “Set_Attributes_All“, so that all parameters of a module can be written and read in one telegram. All attributes of a module are included in these telegrams beginning with attribute 0x65. Therefore the total length depends on the number of attributes and the particular data types. The parameter data are checked for validity in the coupler

Process data

The UR20-FBC-EIP-ECO process data are being packed into these assemblies:

Packed process data UR20-FBC-EIP-ECO

Input data	
Assembly 0x65 (101)	Assembly 0x67 (103)
2 byte status word	2 byte status word
X byte process data of the modules	X byte process data of the modules
	8 byte diagnostic data
Output data	
Assembly 0x66 (102)	Assembly 0x68 (104)
2 byte control word	2 byte control word
X byte process data of the modules	X byte process data of the modules
	8 byte diagnostic data control word

Assemblies 0x66 (102) and 0x68 (104) have a run/idle header.



Only the associated assemblies 101 with 102 or 103 with 104 can be used. If the EDS file has been installed this will be checked and an invalid access will be rejected.

Unpacked process data UR20-FBC-EIP

Input data	
Assembly 0x6F (111)	Assembly 0x71 (113)
2 byte status word	2 byte status word
X byte process data of the modules	X byte process data of the modules
	8 byte diagnostic data
Output data	
Assembly 0x70 (112)	Assembly 0x72 (114)
2 byte control word	2 byte control word
X byte process data of the modules	X byte process data of the modules
	8 byte diagnostic data control word

Assemblies 0x70 (112) and 0x72 (114) have a run/idle header.



Only the associated assemblies 111 with 112 or 113 with 114 can be used. If the EDS file has been installed this will be checked and an invalid access will be rejected.

Implicit and explicit messaging

The EtherNet/IP coupler supports cyclic process data exchange (implicit messaging) with an EtherNet/IP scanner. Furthermore the process data exchange can be activated via acyclic messages (explicit messaging).

An explicit access to read or write must take place within the time specified in the object 0x66/0x01/0x6B (102/1/107) „Timeout in seconds“, otherwise the connection will be terminated. In order for the coupler to accept write access, the object 0x66/0x01/0x6C (102/1/108) „Start Explicit Process Data Exchange“ must also be set to „1“. This object is automatically set to „0“ again when the connection is terminated. Thus, it must be ensured that this object is first set to „1“ again after each connection re-establishment, in order to enable explicit write access again.

The coupler supports simultaneous connection to several controllers. Only one controller has write access to the coupler, whereas all connected controllers have read access.

Connection options UR20-FBC-EIP

Connection type	Description	Multiple connections
Exclusive Owner	Cyclic process data exchange of assembly 101 (input) and assembly 102 (output)	Other controllers may only have read access
Exclusive Owner, Diagnosis Interface	Cyclic process data exchange of assembly 103 (input) and assembly 104 (output)	Other controllers may only have read access
Exclusive Owner with Config Assembly	Cyclic process data exchange of assembly 101 (input) and assembly 102 (output), transfer of the configuration assembly 123	Other controllers may only have read access
Exclusive Owner with Config Assembly	Cyclic process data exchange of assembly 103 (input) and assembly 104 (output), transfer of the configuration assembly 123	Other controllers may only have read access
Diagnosis Interface Input Only	Cyclic input data transfer from assembly 101 (outputs are assigned to assembly 198)	Further controllers may access, one of may write
Input Only, Diagnosis Interface	Cyclic input data transfer from assembly 103 (outputs are assigned to assembly 198)	Further controllers may access, one of may write
Listen Only	Cyclic input data transmission from Assembly 101 (Aoutputs are assigned to assembly 199)	At least one other controller must have read or write access
Listen Only, Diagnosis Interface	Zyklische Eingangsdatenübertragung von Assembly 103 (Ausgänge werden Assembly 199 zugewiesen)	At least one other controller must have read or write access
Explicit CIP Get Attribute	Acyclic reading data transmission	Further controllers may access, one of may write
Explicit CIP Set Attribute	Acyclic write data transmission, must be activated via object 102/1/108[1)]	Other controllers may only have read access

1) Only applies to connections that exclusively use explicit messaging. If acyclical set attribute accesses also take place from a control with an exclusive owner connection, activation is not necessary and the timeout is not relevant.

Packed process data of the modules

The process data of a digital module are packed directly on the process data of the previous module. The process data of all other modules always starts with the beginning of the next word.

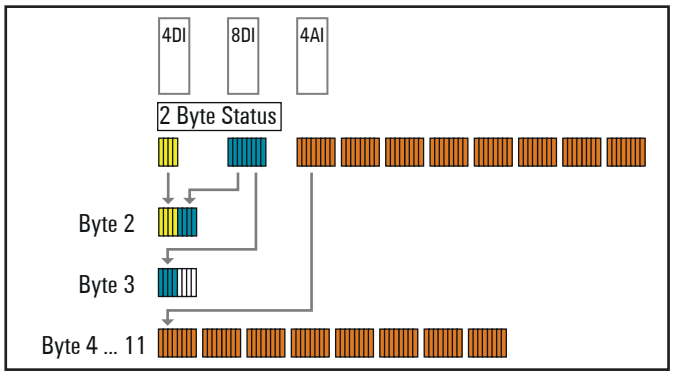

Packed process data in an exemplified module arrangement 4DI, 8DI, 4AI

The modules' process data include a maximum of 494 byte. Thererfore the process data of assembly 0x65 (101) and 0x66 (102) will include a maximum of 496 byte, whereas the process data of assembly 0x67 (103) and 0x68 (104) include a maximum of 504 byte. The actual length is defined by the arrangement of the modules, the assemblies' size is always an even number of bytes (2 byte, 4 byte etc.). So in the example assembly 0x65 (101) is 12 byte long whereas assembly 0x67 (103) is 20 byte long.

The size which is expected during the connection is being established can be read from class 0x04 (4), instances 0x65 to 0x68 (101 to 104), attribute 0x04 (4) or via the web server.

Unpacked process data of the modules

The process data of all modules is added byte by byte without gaps. A 4DI- or 4DO module therefore always occupies 1 Byte. There is no alignment on word limits.

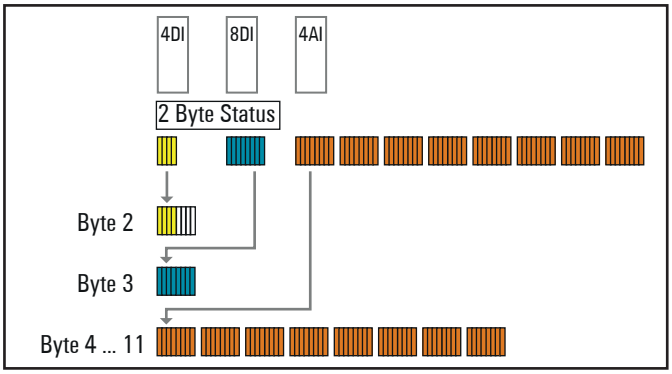

Unpacked process data in an exemplified module arrangement 4DI, 8DI, 4AI

The size which is expected during the connection is being established can be read from class 0x04 (4), instances 0x6F to 0x72 (111 to 114), attribute 0x04 (4) or via the web server.

Control word

8 Bytes of diagnostic data (assembly 0x67) or diagnostic data control word (assembly 0x68) are attached to the process data of both assemblies. Via the control word (2 byte at the beginning) and the diagnostic data control word (8 byte at the end) of the process output data of assembly 0x68 you can choose which diagnostic data (8 byte at the end) shall be transferred within the process input data: 0 in the control word chooses diagnostic data, the 1 chooses process alarm data.
Via the diagnostic control word you choose the module the data of which shall be displayed: If there is a 0 in the diagnostic control word, the bits in the process input data indicate which modules have a diagnostic or a process alarm. Each bit set indicates an active alarm.
If a number from 1...16 is written in the diagnostic control word, the process alarm data (4 byte) or the first 8 byte of the diagnostic alarm dataset will be transferred within the process input data.

Control word UR20-FBC-EIP-ECO

Control word	Diagnostics control word	Diagnostic data
0	0	One bit of each module indicates whether it has a diagnosis
0	1 ... 16	Diagnostic data of the set module (the first 8 byte)
1	0	One bit of each module indicates whether it has a process alarm
1	1 ... 16	Process alarm data of the set module (4 byte are being used)

Status word UR20-FBC-EIP-ECO (packed process data input)

Bit	Name	Remarks
0	Summarized module diagnosis	A diagnosis is available for at least one module with diagnostics functionality.
1	Pending	More than one electronic unit or module has been removed from the station.
2	Errorbit 2	Reserve bit 2, currently not used
3	Systembus error	Error on the system bus. Communication with the connected modules is disrupted.
4	Unacknowledged diagnosis alarm	Unacknowledged diagnosis alarm
5	Unacknowledged process alarm	Unacknowledged process alarm
6	I/O-Configuration error	Deviation in the configuration. The module list has changed. The list of configured modules (Configured Module Ident List class 0x64 (100), instance 0x01 (1), attribute 0x70 (112)) differs from the module list detected by the coupler (Detected Module Ident List class 0x64 (100), instance 0x01 (1), attribute 0x6F (111)).
7	Master configuration error	Master configuration error. The list of configured modules (Configured Module Ident List class 0x64 (100), instance 0x01, attribute 0x70 (112)) differs significantly from the module list detected by the coupler (Detected Module Ident List class 0x64 (100), instance 0x01 (1), attribute 0x6F (111)) ab. No process data can be exchanged with the modules.
8	Errorbit 8	Reserve bit 8, currently not used
9	Errorbit 9	Reserve bit 9, currently not used
10	Force mode active	Force mode was activated through the web server. Process data cannot be exchanged between the master and forced channels.
11	Removed module	At least one module has been removed. This bit is reset when the station is complete again.
12	Errorbit 12	Reserve bit 12, currently not used
13	Errorbit 13	Reserve bit 13, currently not used
14	Voltage error	Error in the voltage supply
15	IO-Link diagnosis	A diagnosis is present on an IO-Link device.

Object descriptions UR20-FBC-EIP-ECO: CIP Common Classes

Class	Attribute hex	Attribute dez	Get	Set	NV[1]	Data type[2]	Name	Description
Identity 0x01 (1)								
	Instance 0x00 (0)							
	0x01	1	x			UINT	Revision	Revision of this object
	0x02	2	x			UINT	Max Instance	Highest possible instance of this object
	0x03	3	x			UINT	Number of Instances	Current number of instances
	0x06	6	x			UINT	Max Class Attribute	ID of the last attribute of this class in instance 0
	0x07	7	x			UINT	Max Instance Attribute	ID of the last attribute of this class in the other instances
	Instance 0x01 (1)							
	0x01	1	x		x	UINT	Vendor ID	Vendor ID: 1015
	0x02	2	x		x	UINT	DeviceType	General type of device: 0x0C
	0x03	3	x		x	UINT	Product Code	Vendor assigned product code: 9951
	0x04	4	x		x	Struct{USINT,USINT}	Revision {Major, Minor}	Revision of the u-remote coupler
	0x05	5	x			WORD	Device Status	Bit0: Owned; Bit2= Configured; Bit4-7:Extended device status; Bit8: Minor recoverable fault; Bit9: Minor unrecoverable fault; Bit10: Major recoverable fault; Bit 11: Major unrecoverable fault; Bit12-15: Extended device status 2
	0x06	6	x		x	UDINT	Serial Number	Serial number of the device; 32 Bit value
	0x07	7	x		x	SHORT_STRING	Product Name	Product name: UR20-FBC-EIP-ECO
Message Router 0x02 (2)								
	Instance 0x00 (0)							
	0x01	1	x			UINT	Revision	Revision of this object
	0x02	2	x			UINT	Max Instance	Highest possible instance of this object
	0x03	3	x			UINT	Number of Instances	Current number of instances
	0x04	4	x			Struct{UINT,Array of UINT}	Optional Attributes	List of optional attributes
	0x05	5	x			Struct{UINT,Array of UINT}	Optional Services	List of optional services
	0x06	6	x			UINT	Max Class Attribute	ID of the last attribute of this class in instance 0
	0x07	7	x			UINT	Max Instance Attribute	ID of the last attribute of this class in the other instances
	Instance 0x01 (1)							
	0x01	1	x			Struct{UINT,Array of UINT}	List of supported objects	Number of objects; Class codes
	0x02	2	x			UINT	Number of supported connections	Number of supported connections

1) Non volatile (data are saved permanently)
2) For the description of data types refer to table Data types

Object descriptions UR20-FBC-EIP-ECO: CIP Common Classes

Class	Attribute hex	Attribute dez	Get	Set	NV[1]	Data type[2]	Name	Description
Assembly 0x04 (4)								
	Instance 0x00 (0)							
	0x01	1	x			UINT	Revision	Revision of this object
	0x02	2	x			UINT	Max Instance	Highest possible instance of this object
	0x03	3	x			UINT	Number of Instances	Current number of instances
	0x04	4	x			Struct{UINT,Array of UINT}	Optional Attributes	List of optional attributes implemented in this class
	0x06	6	x			UINT	Max Class Attribute	ID of the last attribute of this class in instance 0
	0x07	7	x			UINT	Max Instance Attribute	ID of the last attribute of this class in the other instances
	Instances 0x65 ... 0x68 (101 ... 104)							
	0x03	3	x	x		Array of BYTE	Data	Process data
	0x04	4	x			UINT	Size	Size of process data
	Instances 0x7A (122)							
	0x03	3	x			Array of BYTE	Data	Configuration data
	0x04	4	x	x		UINT	Size	Size of configuration data. The parameter data are not checked in the coupler, but only in the module, if possible.
	Instances 0x7B (123)							
	0x03	3	x	x		Array of BYTE	Data	Configuration data
	0x04	4	x			UINT	Size	Size of configuration data (static 400 BYTE). The parameter data are not checked in the coupler, but only in the module, if possible.
Connection Manager 0x06 (6)								
	Instance 0x00 (0)							
	0x01	1	x			UINT	Revision	Revision of this object
	0x02	2	x			UINT	Max Instance	Highest possible instance of this object
	0x03	3	x			UINT	Number of Instances	Current number of Instances
	0x04	4	x			Struct{UINT,Array of UINT}	Optional Attributes	List of optional attributes implemented in this class
	0x06	6	x			UINT	Max Class Attribute	ID of the last attribute of this class in instance 0
	0x07	7	x			UINT	Max Instance Attribute	ID of the last attribute of this class in the other instances
	Instance 0x01 (1)							
	0x01	1	x	x		UINT	Open Requests	Number of forward open requests
	0x02	2	x	x		UINT	Open Format Rejects	Number of forward open requests, rejected because of bad format
	0x03	3	x	x		UINT	Open Resource Rejects	Number of forward open requests, rejected because of too few resources

1) Non volatile (data are saved permanently)
2) For the description of data types refer to table Data types

Object descriptions UR20-FBC-EIP-ECO: CIP Common Classes

Class	Attribute hex	Attribute dez	Get	Set	NV[1]	Data type[2]	Name	Description
	0x04	4	x	x		UINT	Open Other Rejects	Number of forward open requests, rejected because of other reasons than format or ressouce
	0x05	5	x	x		UINT	Close Requests	Number of forward close requests
	0x06	6	x	x		UINT	Close Format Rejects	Number of forward close requests, rejected because of bad format
	0x07	7	x	x		UINT	Close Other Rejects	Number of forward close requests, rejected because of other reasons than format
	0x08	8	x	x		UINT	Connection Timeouts	Number of connection timeouts
SNMP 0x52 (82)								
	Instance 0x00 (0)							
	0x01	1	x			UINT	Revision	Revision of this object
	0x02	2	x			UINT	Max Instance	Highest possible instance of this object
	0x03	3	x			UINT	Number of Instances	Current number of Instances
	0x04	4	x			Struct{UINT,Array of UINT}	Optional Attributes	List of optional Attributes implemented in this class
	0x06	6	x			UINT	Max Class Attribute	ID of the last attribute of this class in instance 0
	0x07	7	x			UINT	Max Instance Attribute	ID of the last attribute of this class in the other instances
	Instance 0x01 (1)							
	0x01	1	x	(x)	x	USINT	SNMP enable	1 = enable, 0 = disable
	0x02	2	x		x	USINT	SNMP Version	1 = SNMPv1, 3 = SNMPv3, 31 = SNMPv1+v3
	0x03	3	x	(x)	x	Struct{USINT,STRING}	Trap 1	Destination of SNMP-traps, Byte1: 0 = unconfigured, 1 = IP address; String: IP address in form 123.123.123.123
	0x04	4	x	(x)	x	Struct{USINT,STRING}	Trap 2	Destination of SNMP-traps, Byte1: 0 = unconfigured, 1 = IP address; String: IP address in form 123.123.123.123
	0x05	5	x	(x)	x	BOOL	Trap enable	1 = enable, 0 = disable
	0x06	6	x		x	USINT	Trap Type	1 = TrapV1PDU, 2 = TrapV2PDU (only with SNMPv3)
TCP IP Interface 0xF5 (245)								
	Instance 0x00 (0)							
	0x01	1	x			UINT	Revision	Revision of this object
	0x02	2	x			UINT	Max Instance	Highest possible instance of this object
	0x03	3	x			UINT	Number of Instances	Current number of instances
	0x04	4	x			Struct{UINT,Array of UINT}	Optional Attributes	List of optional attributes implemented in this class
	0x06	6	x			UINT	Max Class Attribute	ID of the last attribute of this class in instance 0
	0x07	7	x			UINT	Max Instance Attribute	ID of the last attribute of this class in the other instances

1) Non volatile (data are saved permanently)
2) For the description of data types refer to table Data types

Object descriptions UR20-FBC-EIP-ECO: CIP Common Classes

Class	Attribute hex	Attribute dez	Get	Set	NV[1]	Data type[2]	Name	Description
TCP IP Interface 0xF5 (245)								
	Instance 0x01 (1)							
	0x01	1	x			DWORD	Interface Status	Status of the interface Bit 0 ... 3: 0 = not configured, 1 = configured by software, 2 = configured by hardware; Bit 4: Multicast pending; Bit 5: Interface configuration pending; Bit 6: ACD conflicted; Bit 7: ACD fault
	0x02	2	x		x	DWORD	Capability Flags	Bit 0: BootP; Bit 1: DNS; Bit 2: DHCP; Bit 4: Configuration settable; Bit 5: Configurable by hardware; Bit 6: Change requires reset; Bit 7: ACD capable
	0x03	3	x	x	x	DWORD	Control Flags	Bit 0 ... 3: 0 = static IP, 1 = BootP, 2 = DHCP;
	0x04	4	x		x	Struct{UINT,Padded EPATH}	Physical Link Object	Path to internal Ethernet interface
	0x05	5	x	x	x	Struct{5*UDINT,STRING}	Interface Configuration	IP, network mask, gateway; name server 1, name server 2; domain name
	0x06	6	x	x	x	STRING	Host Name	Host name, for informational purpose
	0x08	8	x	x	x	USINT	TTL Value	TTL value for multicast
	0x09	9	x	x	x	Struct{USINT,USINT,UINT,UDINT}	Mcast Config	Multicast configuration Byte 1: 0 = autogenerated, 1 = according to this parameter, 2 = reserved; Byte 2: reserved; Byte 3 - 4: number of multicast addresses; Byte 5 - 7: start address
	0xA	10	x	x	x	BOOL	ACD active	0 = ACD disabled, 1 = ACD enabled
	0xB	11	x	x	x	Struct{USINT,6*USINT,28*USINT}	Last ACD Conflict	Byte 1: Last conflict state, 0 = No conflict, 1 = during probe, 2 = during ongoing, 3 = during SemiActive; following 6 Bytes: MAC of the conflicting packet; following 28 Bytes: conflicting ARP packet
Ethernet Link 0xF6 (246)								
	Instance 0x00 (0)							
	0x01	1	x			UINT	Revision	Revision of this object
	0x02	2	x			UINT	Max Instance	Highest possible instance of this object
	0x03	3	x			UINT	Number of Instances	Current number of instances
	0x04	4	x			Struct{UINT,Array of UINT}	Optional Attributes	List of optional attributes implemented in this class
	0x06	6	x			UINT	Max Class Attribute	ID of the last attribute of this class in instance 0
	0x07	7	x			UINT	Max Instance Attribute	ID of the last attribute of this class in the other instances

1) Non volatile (data are saved permanently)
2) For the description of data types refer to table Data types

Object descriptions UR20-FBC-EIP-ECO: CIP Common Classes

Class	Attribute hex	Attribute dez	Get	Set	NV[1]	Data type[2]	Name	Description
Ethernet Link 0xF6 (246)								
	Instances 0x01 ... 0x03 (1 ... 3)							
	0x01	1	x			UDINT	Interface Speed	Transfer rate 0 = undefined; 10 = 10 MBps; 100 = 100 MBps
	0x02	2	x			DWORD	Interface Flags	Information on the status and configuration of the interface Bit 0: Link active; Bit 1: 0 = Half duplex, 1 = Full duplex; Bit 2 ... 4: 0 = Autonegotiation in progress, 1 = Autonegotiation and speed detection failed, 2 = Autonegotiation failed but speed detected, 3 = Autonegotiation successfull, 4 = Autonegotiation deactivated; Bit 5: Requires reset before change settings; Bit 6: Hardware fault
	0x03	3	x		x	6*USINT	MAC address	MAC Address
	0x04	4	x			Struct(11*UDINT)	Interface Counters	Counters of the Network Interface
	0x05	5	x			Struct(12*UDINT)	Media Counters	Media specific counters
	0x06	6	x	x	x	Struct{WORD,UINT}	Interface Control	Bit 0: 1 = Autonegotiation, 0 = no autonegotiation; Bit 1: 0 = Half Duplex, 1 = Full Duplex; Byte 3 ... 4: Speed: 10 = 10 MBps, 100 = 100 MBps
	0x07	7	x		x	USINT	Interface Type	0 = unknown, 1 = internal, 2 = Twisted Pair, 3 = optical
	0x08	8	x			USINT	Interface State	0 = unknown, 1 = enabled, 2 = disabled, 3 = testing
	0x09	9	x	x	x	USINT	Admin State	0 = reserved, 1 = enable, 2 = disable
	0xA	10	x		x	SHORT_STRING	Interface Label	Text string (Port1/Port2/internal)

1) Non volatile (data are saved permanently)
2) For the description of data types refer to table Data types

Object descriptions UR20-FBC-EIP-ECO: Vendor specific classes

Class	Attribute hex	Attribute dez	Get	Set	NV[1]	Data type[2]	Name	Description
Gateway 0x64 (100)								
	Instance 0x00 (0)							
	0x64	100	x			UINT	Revision	Revision number
	0x65	101	x			UINT	Max Instance	Maximum number of instances
	0x66	102	x			UINT	Number of Instances	Current number of instances
	0x67	103	x			UINT	Max Class Attribute	ID of the last attribute of this class in instance 0
	Instance 0x01 (1)							
	0x64	100	x		x	UINT	Max Attributes	ID of the last instance attribute
	0x65	101	x		x	STRING	Hardware Version	Hardware version of the coupler
	0x66	102	x		x	STRING	Software Version	Software version of the coupler
	0x67	103	x		x	STRING	Serial Number	Full serial number of the coupler
	0x68	104	x			WORD	Status Word	Status word as in assembly
	0x69	105	x	x		WORD	Control Word	Control word as in assembly
	0x6A	106	x	x	x	BYTE	Parameter Fieldbus error	Parameter “Output behaviour on fieldbus error”; All outputs off (0) / Enable substitute values (1) / Hold last value (2)
	0x6B	107	x	x	x	BOOL	Parameter Hot swap	Parameter “Module behaviour on hot swap”; Continue data exchange (0) / Behaviour like fieldbus error (1)
	0x6C	108	x			Array of Struct{USINT,BYTE,Array of 2 BYTE}	Diag Summary	Diag bytes of all modules with diag: Byte 1: Slot number; Byte 2: Slot state; Byte 3-4: First two bytes of diag
	0x6D	109	x	x	x	BOOL	Parameter Data format	Parameter “Data format”; Motorola (0) / Intel (1)
	0x6E	110	x	x		Array of 4 BYTE	Save/Restore Module Parameter	Write SAVE to save the module parameter; Write LOAD to load the defaults of the module parameter
	0x6F	111	x			Array of 64 DWORD	Current Module List	List of currently plugged modules
	0x70	112	x	x	x	Array of 64 DWORD	Module Ref List	List of expected modules
	0x71	113	x	x	x	BOOL	Diagnostic Alarm	Parameter “Diagnosis alarm”; disabled (0) / enabled (1)
	0x72	114	x	x	x	BOOL	Process Alarm	Parameter “Process alarm”; disabled (0) / enabled (1)
	0x73	115	x	x		Array of BYTE	Module Parameter	Array containing all parameter of all modules (Bytes 0 ... 449)
	0x74	116	x	x	x	BOOL	Force Lock	Force mode: unlocked (0) / locked (1)
	0x75	117	x	x	x	BYTE	Behaviour on Idle	Parameter “Behaviour on idle state“; All outputs off (0) / Enable substitute values (1)/ Hold last value (2)
	0x76	118	x		x	Array of 8 BYTE	Unacknowledged Diagnosis	In the event of an unackklowledged diagnosis the Bit in for the respective module is set to 1 (Bit 0 for the first module of the station, Bit 63 for the 64th module).

1) Non volatile (data are saved permanently)
2) For the description of data types refer to table Data types

Object descriptions UR20-FBC-EIP-ECO: Vendor specific classes

Class	Attribute		Get	Set	NV[1]	Data type[2]	Name	Description
	hex	dez						
	0x77	119	x	x	x	BOOL	HTTPS Settings	0 = HTTP&HTTPS, 1 = HTTPS only
	0x78	120	x	x		Array of BYTE	Acyclic Access	Acyclic access for IO-Link or CAN module
	0x79	121	x	x		Array of BYTE	ModuleParameter 2	Array containing all Parameter of all modules (Bytes 450-899)
	0x7A	122	x	x		Array of BYTE	ModuleParameter 3	Array containing all Parameter of all modules (Bytes 900-1349)
	0x7B	123	x	x	x	BOOL	Operation Mode	0=Block device, 1=Modular device
	0x7C	124	x	x		BOOL	Store Module List	When set to 1, stores the module ref list
	0x7D	125	x	x		BOOL	Copy Module List	When set to 1, copies the current module list as module ref list
Slot 0x65 (101)								
	Instance 0x00 (0)							
	0x64	100	x			UINT	Revision	Revision number
	0x65	101	x			UINT	Max Instance	Maximum number of instances
	0x66	102	x			UINT	Number of Instances	Current number of instances
	0x67	103	x			UINT	Max Class Attribute	ID of the last attribute of this class in instance 0
	Instances 0x01 ... 0x40 (1 ... 64)							
	0x64	100	x		x	USINT	Max Attributes	ID of the last instance attribute
	0x65	101	x			STRING	Name	Name of the module
	0x66	102	x			STRING	Product Code	Order number of the module
	0x67	103	x			STRING	Serial Number	Serial number of the module
	0x68	104	x			UDINT	Module ID	ID of the module
	0x69	105	x			STRING	Hardware Version	Hardware version of the module
	0x6A	106	x			STRING	Software Version	Software version of the module
	0x6B	107	x			STRING	MX Version	MX version of the module
	0x6C	108	x			BYTE	Slot State	State of the module: 0x01: ok; 0x80: slot empty; 0x81: wrong module; 0x82: diagnosis active
	0x6D	109	x			UINT	Input Bit Length	Length of input data in Bit
	0x6E	110	x			UINT	Output Bit Length	Length of output data in Bit
	0x6F	111	x			UINT	Parameter Byte Length	Length of parameter data in Byte
	0x70	112	x			UINT	Diag Byte Length	Length of diagnosis data in Byte
	0x71	113	x			Array of BYTE	Process Data In	Input data of the module
	0x72	114	x	x		Array of BYTE	Process Data Out	Output data of the module
	0x73	115	x	x		Array of BYTE	Parameter Data	Parameter data of the module. The parameter data are not checked for validity in the coupler, but only in the module, if possible.
	0x74	116	x			Array of BYTE	Diagnosis Data	Diagnosis data of the module
	0x75	117	x			Array of BYTE	Process Alarm Data	Process alarm data of the module

1) Non volatile (data are saved permanently)
2) For the description of data types refer to table Data types

Object descriptions UR20-FBC-EIP-ECO: Vendor specific classes

Class	Attribute hex	Attribute dez	Get	Set	NV[1]	Data type[2]	Name	Description
Process Data 0x66 (102)								
	Instance 0x00 (0)							
	0x64	100	x			UINT	Revision	Revision number
	0x65	101	x			UINT	Max Instance	Maximum number of instances
	0x66	102	x			UINT	Number of Instances	Current number of instances
	0x67	103	x			UINT	Max Class Attribute	ID of the last attribute of this class in instance 0
	Instance 0x01 (1)							
	0x64	100	x		x	USINT	Max Attributes	ID of the last instance attribute
	0x65	101	x			Array of BYTE	Process Data In	All input data without status word
	0x66	102	x			UINT	Length Process Data In	Length of input data
	0x67	103	x	x		Array of BYTE	Process Data Out	All output data without control word
	0x68	104	x			UINT	Length Process Data Out	Length of output data
	0x69	105	x			Array of 8 BYTE	Diag Status	Diagnosis messages as in assembly
	0x6A	106	x			Array of 8 BYTE	Diag Control	Diagnosis control as in assembly
	0x6B	107	x	x		Word	Timeout in seconds	Time interval in seconds in which an explicit message access must take place, otherwise the connection is disconnected
	0x6C	108	x	x		Bool	Start Explicit Process Data Exchange	1 = Explicit Messaging activated (is reset when the connection is lost) / 0 = Explicit Messaging write access to process data blocked, read access possible
	0x6D	109	x			WORD	Status Register	Status Register, only in Modular device mode
	0x6E	110	x			WORD	Control Register	Control Register, only in Modular device mode
Module Parameter 0x67 (103)								
	Instance 0x00 (0)							
	0x64	100	x			UINT	Revision	Revision of this Object
	0x65	101	x			UINT	Max Instance	Maximum number of instances
	0x66	102	x			UINT	Number of Instances	Current number of instances
	0x67	103	x			UINT	Max Class Attribute	ID of the last attribute of this class in instance 0
	Instances 0x01 ... 0x40 (1 ... 64)							
	0x64	100	x		x	UINT	Max Attributes	ID of the last instance attribute
	0x65	101	x	x		Depending on parameter	Parameter	First Parameter of the module. The parameter data are checked in the coupler, and also in the module, if possible.

1) Non volatile (data are saved permanently)
2) For the description of data types refer to table Data types

Coupler-dependent data width of I/O modules UR20-FBC-EIP-ECO

Item No.	Module	Configuration	Parameters	Diagnostics	Process data	
					Input	Output
		Bytes	Bytes	Bytes	Bytes	Bytes
2799510000	UR20-FBC-EIP-ECO	–	8	–	2/10[1)]	2/10[1)]
1315170000	UR20-4DI-P	4	4	47	1	–
2009360000	UR20-4DI-P-3W	4	4	47	1	–
1315180000	UR20-8DI-P-2W	4	8	47	1	–
1394400000	UR20-8DI-P-3W	4	8	47	1	–
1315190000	UR20-8DI-P-3W-HD	4	8	47	1	–
1315200000	UR20-16DI-P	4	–	47	2	–
1315210000	UR20-16DI-P-PLC-INT	4	–	47	2	–
1460140000	UR20-2DI-P-TS	–	–	–	–	–
1460150000	UR20-4DI-P-TS	–	–	–	–	–
1315350000	UR20-4DI-N	4	4	47	1	–
1315370000	UR20-8DI-N-3W	4	8	47	1	–
1315390000	UR20-16DI-N	4	–	47	2	–
1315400000	UR20-16DI-N-PLC-INT	4	–	47	2	–
1550070000	UR20-4DI-2W-230V-AC	4	–	47	1	–
2457240000	UR20-8DI-ISO-2W	4	8	47	1	–
1315220000	UR20-4DO-P	4	1	47	–	1
1315230000	UR20-4DO-P-2A	4	1	47	–	1
1394420000	UR20-4DO-PN-2A	4	1	47	–	1
1315240000	UR20-8DO-P	4	1	47	–	1
1509830000	UR20-8DO-P-2W-HD	4	1	47	–	1
1315250000	UR20-16DO-P	4	–	47	–	2
1315270000	UR20-16DO-P-PLC-INT	4	–	47	–	2
1315410000	UR20-4DO-N	4	1	47	–	1
1315420000	UR20-4DO-N-2A	4	1	47	–	1
1315430000	UR20-8DO-N	4	1	47	–	1
1315440000	UR20-16DO-N	4	–	47	–	2
1315450000	UR20-16DO-N-PLC-INT	4	–	47	–	2
2457250000	UR20-4DO-ISO-4A	4	1	47	–	1
2456530000	UR20-8DIO-P-3W-DIAG	4	8	47	1	1
1315540000	UR20-4RO-SSR-255	4	1	47	–	1
1315550000	UR20-4RO-CO-255	4	1	47	–	1
1315600000	UR20-2PWM-PN-0.5A	4	8	47	4	12
3036960000	UR20-2PWM-PN-0.5A-V2	4	8	47	4	12
1315610000	UR20-2PWM-PN-2A	4	8	47	4	12
3036950000	UR20-2PWM-PN-2A-V2	4	8	47	4	12
2697910000	UR20-2PWM-I-2.5A-2DI-P	4	72	47	8	6
2489830000	UR20-1SM-50W-6DI2DO-P	4	21	47	16	16

1) Depending on the process data assembly used (see page 260)

Coupler-dependent data width of I/O modules UR20-FBC-EIP-ECO

Item No.	Module	Configuration	Parameters	Diagnostics	Process data	
					Input	Output
		Bytes	Bytes	Bytes	Bytes	Bytes
2705620000	UR20-2AI-UI-16	4	4	47	4	–
2566090000	UR20-2AI-UI-16-DIAG	4	6	47	4	–
1315620000	UR20-4AI-UI-16	4	6	47	8	–
1315690000	UR20-4AI-UI-16-DIAG	4	8	47	8	–
1993880000	UR20-4AI-UI-DIF-16-DIAG	4	8	47	8	–
2544660000	UR20-4AI-UI-DIF-32-DIAG	4	40	47	16	–
2566960000	UR20-4AI-UI-ISO-16-DIAG	4	23	47	8	–
1506920000	UR20-4AI-UI-16-HD	4	6	47	8	–
1506910000	UR20-4AI-UI-16-DIAG-HD	4	8	47	8	–
1394390000	UR20-4AI-UI-12	4	6	47	8	–
1529370000	UR20-8AI-I-16-DIAG	4	11	47	16	–
1315650000	UR20-8AI-I-16-HD	4	10	47	16	–
1315720000	UR20-8AI-I-16-DIAG-HD	4	12	47	16	–
1315670000	UR20-8AI-I-PLC-INT	4	10	47	16	–
1315700000	UR20-4AI-RTD-DIAG	4	28	47	8	–
2456540000	UR20-4AI-RTD-HP-DIAG	4	44	47	8	–
1315710000	UR20-4AI-TC-DIAG	4	28	47	8	–
2001670000	UR20-4AI-R-HS-16-DIAG	4	63	47	8	–
2555940000	UR20-8AI-RTD-DIAG-2W	4	10	47	16	–
3039320000	UR20-15AI-U-16-DIAG	4	24	47	9	1
1990070000	UR20-2AI-SG-24-DIAG	4	26	47	16	16
2007420000	UR20-3EM-230V-AC	4	27	47	16	16
2920830000	UR20-3EM-400V-AC-CT1A	4	40	47	32	8
2920840000	UR20-3EM-400V-AC-CT5A	4	40	47	32	8
2920850000	UR20-3EM-400V-AC-RC	4	40	47	32	8
2920860000	UR20-3EM-400V-AC-333mV	4	40	47	32	8
2705630000	UR20-2AO-UI-16	4	6	47	–	4
2566100000	UR20-2AO-UI-16-DIAG	4	7	47	–	4
2566970000	UR20-2AO-UI-ISO-16-DIAG	4	14	47		4
1315680000	UR20-4AO-UI-16	4	12	47	–	8
2453880000	UR20-4AO-UI-16-M	4	12	47	–	8
1315730000	UR20-4AO-UI-16-DIAG	4	13	47	–	8
2453870000	UR20-4AO-UI-16-M-DIAG	4	13	47	–	8
1510690000	UR20-4AO-UI-16-HD	4	12	47	–	8
1506930000	UR20-4AO-UI-16-DIAG-HD	4	13	47	–	8
1315570000	UR20-1CNT-100-1DO	4	21	47	12	10
1315590000	UR20-2CNT-100	4	40	47	12	12
1315580000	UR20-1CNT-500	4	21	47	8	10

1) Depending on the process data assembly used (see page 260)

Coupler-dependent data width of I/O modules UR20-FBC-EIP-ECO

Item No.	Module	Configuration	Parameters	Diagnostics	Process data	
					Input	Output
		Bytes	Bytes	Bytes	Bytes	Bytes
1508080000	UR20-2FCNT-100	4	2	47	20	12
1508090000	UR20-1SSI	4	8	47	6	0
1315750000	UR20-1COM-232-485-422	4	6	47	16	16
2826800000	UR20-1COM-232-485-422-V2	4	35	47	19	19
2007430000	UR20-1COM-SAI-PRO	4	0	47	0	0
3116480000	UR20-1COM-SAI-PRO-V2	4	0	47	0	0
1315740000	UR20-4COM-IO-LINK	See manual for UR20-4COM-IO-LINK communication module				
2819690000	UR20-4COM-IO-LINK-V2	See manual for UR20-4COM-IO-LINK communication module				
1529780000	UR20-4DI-4DO-PN-FSOE	–	–	–	–	–
1529800000	UR20-8DI-PN-FSOE	–	–	–	–	–
1335060000	UR20-4DI-4DO-PN-FSPS	–	–	–	–	–
1335070000	UR20-8DI-PN-FSPS	–	–	–	–	–
1335030000	UR20-PF-O-1DI-SIL	4	–	47	4	–
1335040000	UR20-PF-O-2DI-DELAY-SIL	4	–	47	4	–
1335050000	UR20-PF-O-2DI-SIL	4	–	47	4	–
max. data (in Byte)		264	1350	3008	496/504[1)]	496/504[1)]

1) Depending on the process data assembly used (see page 260)

5.17 PROFINET fieldbus coupler UR20-FBC-PN-SL-4DIO

The UR20-FBC-PN-SL-4DIO fieldbus coupler is a PROFINET I/O participant certified by the PROFINET user organisation. The coupler is the head module for the u-remote system bus, to which up to 12 active u-remote modules can be connected. A 4-channel connector (local I/Os) is integrated, which can be configured as P-switching inputs or outputs. The PROFINET coupler has two Ethernet ports, and the integrated switch supports a line network structure.
The coupler can be accessed with a system-independent web server application via Ethernet. Thus, all information, such as diagnostics, status values and parameters, can be read and all connected modules can be simulated or forced. The station's main power supply is integrated in the coupler. Power is supplied via a 4-pole connector.

When planning the u-remote station, be sure to consider the compatibility of fieldbus couplers with I/O modules; see the release notes.

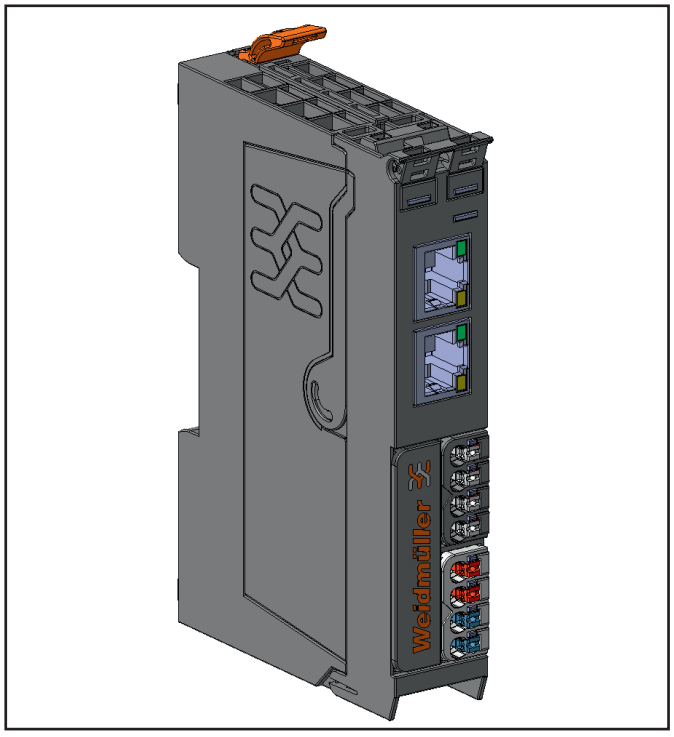

Fieldbus coupler UR20-FBC-PN-SL-4DIO (Order No. 3120470000)

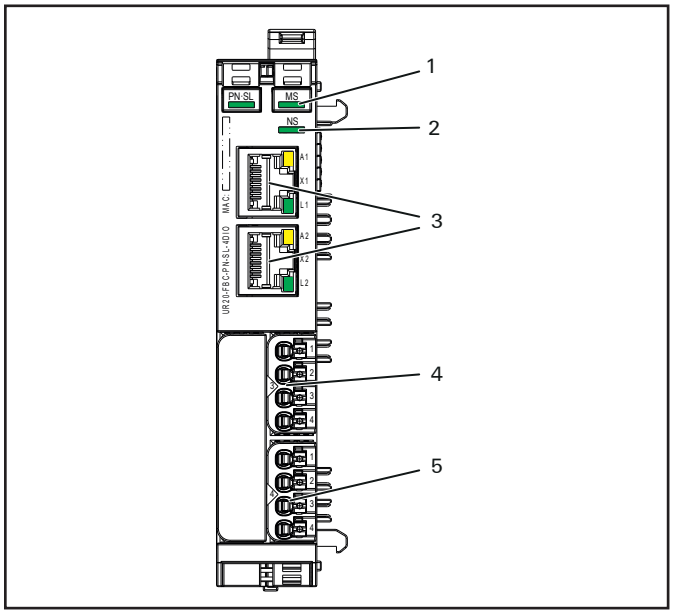

Device overview UR20-FBC-PN-SL-4DIO

1 LED module status
2 LED network status
3 Ethernet interface with status LED and activity LED
4 4DIO connector
5 Supply connector 24 V DC

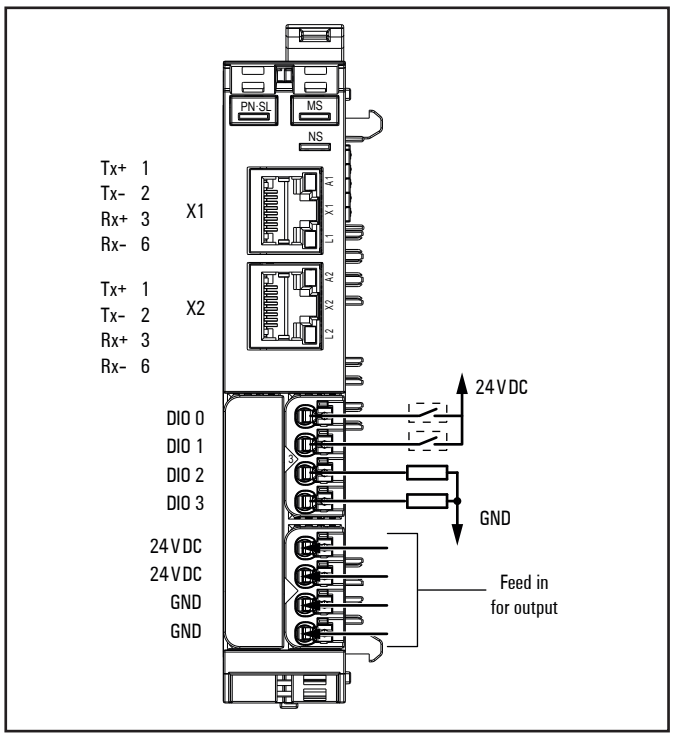

Connection diagram UR20-FBC-PN-SL-4DIO

Status indicators



LED indicators UR20-FBC-PN-SL-4DIO, troubleshooting see Chapter 12

PN-SL		Product type, no LED
MS	Module status	**Off**: No power supply **Green**: Device in operation **Green flashing** (2 Hz): Profinet addressing **Yellow**: Booting, HW initialisation **Red**: Module diagnosis, HW error, supply error, configuration error, module removed **Red flashing** (4 Hz): Station is in force mode or firmware update running
NS	Network status	**Off**: No power supply **Green**: Data exchange established **Green flashing** (2 Hz): Profinet addressing **Red**: No dtat connection, data exchange failed **Red flashing** (1 Hz): configuration error,
A1	Aktivity	**Off**: No data exchange **Yellow**: Data being exchanged on port 1
L1	Connection	**Off**: No connection **Green**: Connection established between port 1 of the coupler and another field device
A2	Aktivity	**Off**: No data exchange **Yellow**: Data being exchanged on port 2
L2	Connection	**Off**: No connection **Green**: Connection established between port 2 of the coupler and another field device
3.1 ... 3.4	I/O status Channel 0 ... 3	**Off**: Channel inactive **Yellow**: Channel active
4.1		**Green**: Power supply > 17 ± 1 V DC
4.2		**Red**: Power supply < 17 ± 1 V DC

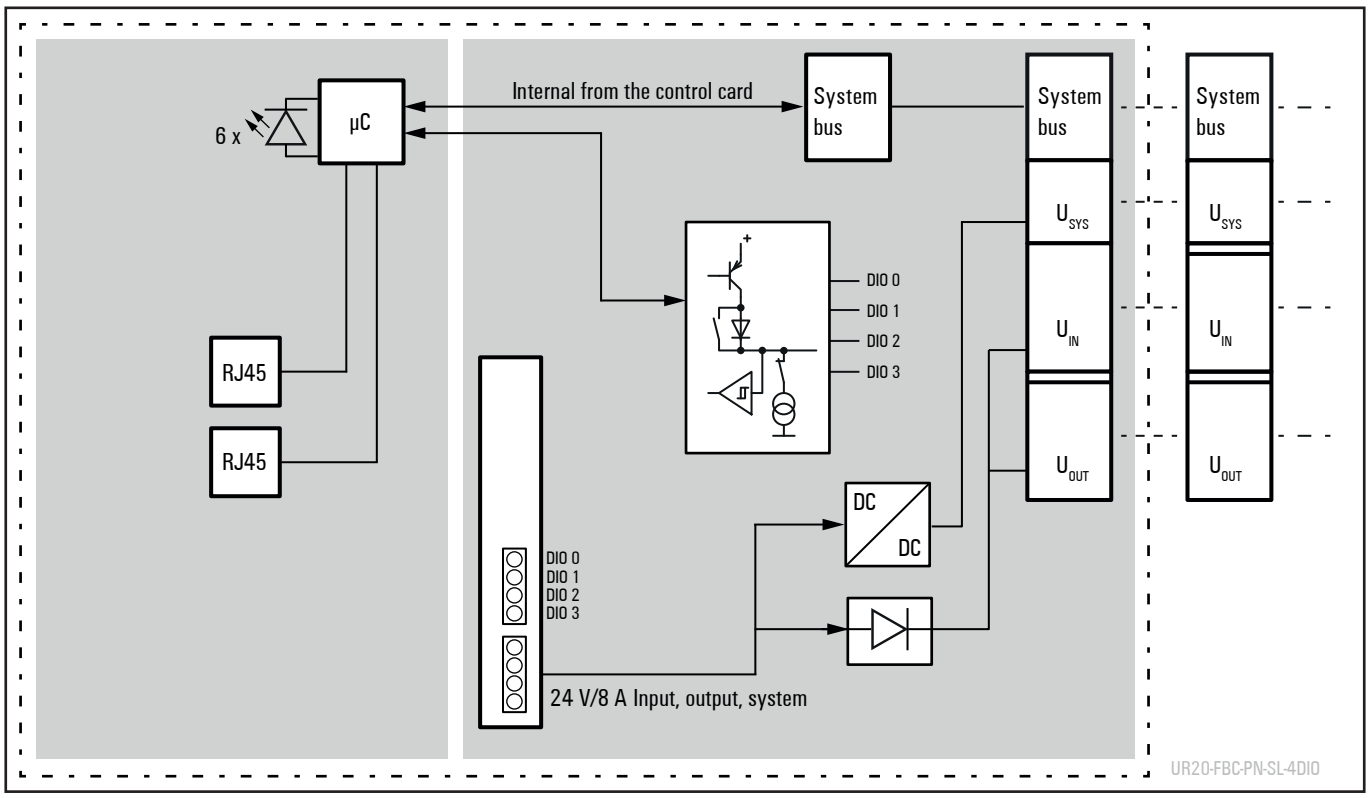

Block diagram UR20-FBC-PN-SL-4DIO

Technical data UR20-FBC-PN-SL-4DIO (Order No. 3120470000)

System data		
Connection	2 x RJ-45	
Fieldbus protocol	PROFINET IO (RT)	
Input data width	max. 512 Byte	
Output data width	max. 512 Byte	
Parameter data	max. 12 x 64 Byte	
Diagnostic data	max. 12 x 47 Byte	
Number of modules	max. 12 aktive	
Configuration interface	none (Ethernet)	
Transfer rate	Fieldbus	max. 100 MBit/s
	u-remote system bus	max. 48 MBit/s
Inputs (local I/Os, parameterisable)		
Number	up to 4	
Input type	P-switching, for Type 1 and Type 3 sensors as per IEC 61131-2	
Input filter	Input delay 3 ms	
Low input voltage	< +5 V, reverred to GND	
High input voltage	> +11 V, reverred to GND	
Sensor supply	no	
Sensor connection	1-wire	
Reverse polarity protection	yes	
Module diagnosis	yes	
Individual channel diagnosis	no	
Outputs (local I/Os, parameterisable)		
Number	up to 4	
Type	P-switching	
Type of load	ohmic, inductive, lamp load	
Response time	low » high max. 100 µs; high » low max. 250 µs	
Max. output current	per channel 0.5 A	
	per module 2 A	
Breaking energy (inductive)	150 mJ per channel	
Switching frequency	Ohmic load (min. 47 Ω)	250 Hz
	Inductive load (DC 13)	0.2 Hz without free-wheeling diode; 250 Hz with suitable free-wheeling diode
	Lamp load (12 W)	250 Hz

1) Restrictions for the use in potentially explosive atmosphere: Only horizontal installation

Technical data UR20-FBC-PN-SL-4DIO (Order No. 3120470000)

Actuator connection	1-wire	
Short-circuit-proof	yes	
Protective circuit	constant current with thermal switch-off and automatic restart	
Response time of the current limiting circuit	< 100 µs	
Module diagnosis	yes	
Individual channel diagnosis	no	
Can be used with PF-O-xDI-SIL	yes	
Supply		
Supply voltage for system, inputs and outputs	24 V DC +20% / -15% (supply line < 30 m)	
Feed-in current [1]	max. 8 A	
Current consumption from system current path I_{SYS}	50 mA, typ. without I/Os	
Temperature data [1]		
UR20-FBC-PN-SL-4DIO	Operation (horizontal installation)	0 °C ... +50 °C (8 A Einspeisung)
	Operation (vertical installation)	0 °C ... +50 °C (8 A Einspeisung)
	Storage, transport	-40 °C ... +85 °C
Connection data		
Type of connection	PUSH IN	
Conductor cross-section	Single-wired, fine-wired	0,14 ... 1,5 mm² (AWG 26 ... 16)
Weight		
Weight (operational status)	120 g	
General data, see Section 3.2		

1) Restrictions for the use in potentially explosive atmosphere: Only horizontal installation

Overview of editable parameters UR20-FBC-PN-SL-4DIO

Parameter	Optional values	Default
IP address	4 numbers between 0 and 255	
Subnet mask	4 numbers between 0 and 255	
Gateway	4 numbers between 0 and 255	
Station name	free text, max. 240 characters, permitted characters: a-z, 0-9, full stop, hyphen	
HTTPS setting	HTTP & HTTPS concurrent operation / only HTTPS; no HTTP	only HTTPS; no HTTP
Process alarm	disabled / enabled	disabled
Diagnostic alarm	disabled / enabled	disabled
Type of diagnostic alarm	Vendor-specific diagnostic (complete diagnostic) / Extended channel diagnostic (short diagnostic)	Erweiterte Kanaldiagnose (kurze Diagnose)
Output behaviour on fieldbus error	All outputs off / Enable substitute value / Hold last value	All outputs off
Module behaviour on hot swap	Continue data exchange / Behaviour like fieldbus error	Continue data exchange
Data format	Motorola / Intel	Intel
Lock force mode	Force mode unlocked / Force mode locked	Force mode unlocked
Parameters of the I/O channels	**Optional values**	**Default**
I/O mode	Input / output	Input
Fehlerersatzwert	off / on	off

Reading diagnostic data

The last diagnostic telegram reported by the respective module can be read out from a slot via the acyclic services (ReadRecord). The diagnostic data are listed in the respective module description (see chapter 6).
The following diagnostic data are available:

Index 0	the first 4 Byte
Index 2	47 Byte (the complete string)

Status word

The following process data are available if the PROFINET coupler is used with status word.

Process data[1)] inputs[)], bits in coupler status word UR20-FBC-PN-SL-4DIO

Byte	Bit	Name	Description
IB0	0	Errorbit 8	Reserve bit 8, currently not used
	1	Errorbit 9	Reserve bit 9, currently not used
	2	Force mode active	The force mode was activated via the web server. Process data cannot be exchanged between the master and forced channels.
	3	Errorbit 11	Reserve bit 11, currently not used
	4	Errorbit 12	Reserve bit 12, currently not used
	5	Errorbit 13	Reserve bit 13, currently not used
	6	Voltage error U	Error on the voltage supply
	7	Errorbit 15	Reserve bit 15, currently not used
IB1	0	Station diagnosis active	A diagnosis is available for at least one module with diagnostics functionality.
	1	Errorbit 1	Reserve bit 1, currently not used
	2	Errorbit 2	Reserve bit 2, currently not used
	3	Systembus error	Error on the system bus. Communication with the connected modules is disrupted.
	4	Port 1 Link active	The port 1 link is active.
	5	Port 2 Link active	The port 2 link is active.
	6	I/O-Configuration error	Deviation in the configuration.
	7	Master configuration error	More than two modules have been physically removed from the station.

1) Internal process data mapping with data format “Standard”. Depending on the fieldbus specification and the data format of the communicating fieldbus components the bytes and/or words can be reversed during data transfer.

Process data inputs UR20-FBC-PN-SL-4DIO

Byte	Bit	Description
IB0	IX0.0	DI0
	IX0.1	DI1
	IX0.2	DI2
	IX0.3	DI3

Process data outputs UR20-FBC-PN-SL-4DIO

Byte	Bit	Description
QB0	QX0.0	DO0
	QX0.1	DO1
	QX0.2	DO2
	QX0.3	DO3

Coupler-dependent data width of I/O modules UR20-FBC-PN-SL-4DIO

Order No.	Module	Configuration	Parameters	Diagnostics	Process data	
					Input	Output
		Bytes	Bytes	Bytes	Bytes	Bytes
3120470000	UR20-FBC-PN-SL-4DIO	4	10	47	4	4
	UR20-FBC-PN-SL-4DIO local I/Os	4	6	–	2	2
1315170000	UR20-4DI-P[1)]	4	8	47	2	1
2009360000	UR20-4DI-P-3W[1)]	4	8	47	2	1
1315180000	UR20-8DI-P-2W	4	12	47	2	1
1394400000	UR20-8DI-P-3W	4	12	47	2	1
1315190000	UR20-8DI-P-3W-HD	4	12	47	2	1
1315200000	UR20-16DI-P	4	–	47	3	1
1315210000	UR20-16DI-P-PLC-INT	4	–	47	3	1
1315350000	UR20-4DI-N[1)]	4	8	47	2	1
1315370000	UR20-8DI-N-3W	4	12	47	2	1
1315390000	UR20-16DI-N	4	–	47	3	1
1315400000	UR20-16DI-N-PLC-INT	4	–	47	3	1
1550070000	UR20-4DI-2W-230V-AC[1)]	4	–	47	2	1
2457240000	UR20-8DI-ISO-2W	4	12	47	2	1
1315220000	UR20-4DO-P[1)]	4	5	47	1	2
1315230000	UR20-4DO-P-2A[1)]	4	5	47	1	2
1394420000	UR20-4DO-PN-2A	4	5	47	1	2
1315240000	UR20-8DO-P	4	5	47	1	2
1509830000	UR20-8DO-P-2W-HD	4	5	47	1	2
1315250000	UR20-16DO-P	4	–	47	1	3
1315270000	UR20-16DO-P-PLC-INT	4	–	47	1	3
1315410000	UR20-4DO-N[1)]	4	5	47	1	2
1315420000	UR20-4DO-N-2A[1)]	4	5	47	1	2
1315430000	UR20-8DO-N	4	5	47	1	2
1315440000	UR20-16DO-N	4	–	47	1	3
1315450000	UR20-16DO-N-PLC-INT	4	–	47	1	3
2457250000	UR20-4DO-ISO-4A[1)]	4	5	47	1	2
2456530000	UR20-8DIO-P-3W-DIAG	4	12	47	2	2
1315540000	UR20-4RO-SSR-255[1)]	4	5	47	1	2
1315550000	UR20-4RO-CO-255[1)]	4	5	47	1	2
1315600000	UR20-2PWM-PN-0.5A	4	12	47	5	13
3036960000	UR20-2PWM-PN-0.5A-V2	4	12	47	5	13
1315610000	UR20-2PWM-PN-2A	4	12	47	5	13
3036950000	UR20-2PWM-PN-2A-V2	4	12	47	5	13
2697910000	UR20-2PWM-I-2.5A-2DI-P	4	68	47	9	7
2705620000	UR20-2AI-UI-16	4	8	47	5	1

1) Also available as follower module, recognisable in the device description file by ... before the module name. Can follow another supported module and then occupies one byte less in the process data (input 1 and output 1).

Coupler-dependent data width of I/O modules UR20-FBC-PN-SL-4DIO

Order No.	Module	Configuration	Parameters	Diagnostics	Process data	
					Input	Output
		Bytes	Bytes	Bytes	Bytes	Bytes
2566090000	UR20-2AI-UI-16-DIAG	4	10	47	5	1
1315620000	UR20-4AI-UI-16	4	10	47	9	1
1315690000	UR20-4AI-UI-16-DIAG	4	12	47	9	1
1993880000	UR20-4AI-UI-DIF-16-DIAG	4	12	47	9	1
2544660000	UR20-4AI-UI-DIF-32-DIAG	4	44	47	17	1
2566960000	UR20-4AI-UI-ISO-16-DIAG	4	27	47	9	1
1506920000	UR20-4AI-UI-16-HD	4	10	47	9	1
1506910000	UR20-4AI-UI-16-DIAG-HD	4	12	47	9	1
1394390000	UR20-4AI-UI-12	4	10	47	9	1
1529370000	UR20-8AI-I-16-DIAG	4	15	47	17	1
1315650000	UR20-8AI-I-16-HD	4	14	47	17	1
1315720000	UR20-8AI-I-16-DIAG-HD	4	16	47	17	1
1315670000	UR20-8AI-I-PLC-INT	4	14	47	17	1
1315700000	UR20-4AI-RTD-DIAG	4	32	47	9	1
2456540000	UR20-4AI-RTD-HP-DIAG	4	48	47	9	1
1315710000	UR20-4AI-TC-DIAG	4	32	47	9	1
2001670000	UR20-4AI-R-HS-16-DIAG	4	67	47	9	1
2555940000	UR20-8AI-RTD-DIAG-2W	4	14	47	17	1
2920830000	UR20-3EM-400V-AC-CT1A	4	12	47	5	13
2920840000	UR20-3EM-400V-AC-CT5A	4	12	47	5	13
2920850000	UR20-3EM-400V-AC-RC	4	12	47	5	13
2920860000	UR20-3EM-400V-AC-333mV	4	12	47	5	13
2705630000	UR20-2AO-UI-16	4	10	47	1	5
2566100000	UR20-2AO-UI-16-DIAG	4	11	47	1	5
2566970000	UR20-2AO-UI-ISO-16-DIAG	4	18	47	1	5
1315680000	UR20-4AO-UI-16	4	16	47	1	9
2453880000	UR20-4AO-UI-16-M	4	16	47	1	9
1315730000	UR20-4AO-UI-16-DIAG	4	17	47	1	9
2453870000	UR20-4AO-UI-16-M-DIAG	4	17	47	1	9
1510690000	UR20-4AO-UI-16-HD	4	16	47	1	9
1506930000	UR20-4AO-UI-16-DIAG-HD	4	17	47	1	9
1315570000	UR20-1CNT-100-1DO	4	25	47	13	11
1315590000	UR20-2CNT-100	4	44	47	13	13
1508080000	UR20-2FCNT-100	4	6	47	21	13
1335030000	UR20-PF-O-1DI-SIL	4	–	47	5	1
1335040000	UR20-PF-O-2DI-DELAY-SIL	4	–	47	5	1
1335050000	UR20-PF-O-2DI-SIL	4	–	47	5	1
Max. data (in bytes)		56	1088	1408	512	512

1) Also available as follower module, recognisable in the device description file by ... before the module name. Can follow another supported module and then occupies one byte less in the process data (input 1 and output 1).

6 Detailed descriptions of I/O modules

6.1 Digital input module UR20-4DI-P

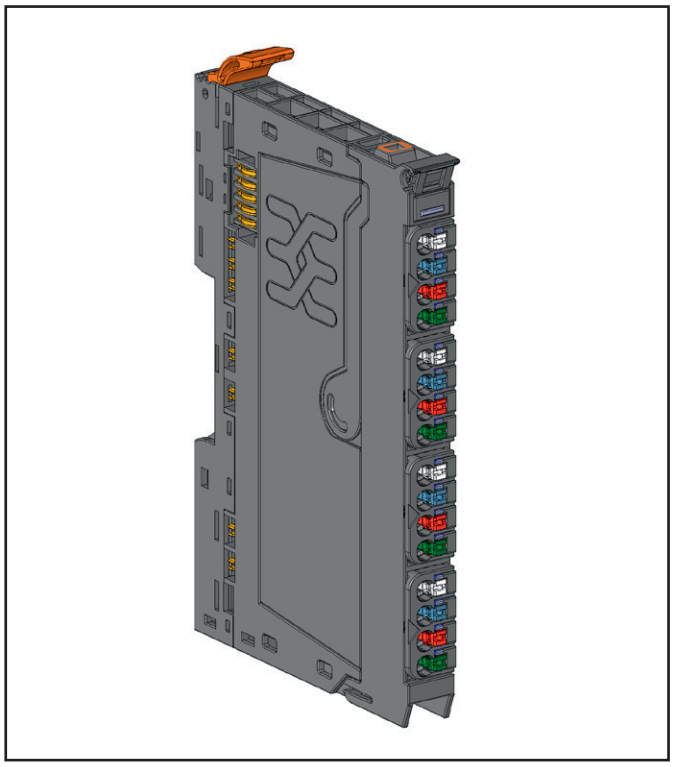

Digital input module UR20-4DI-P (Item No. 1315170000)

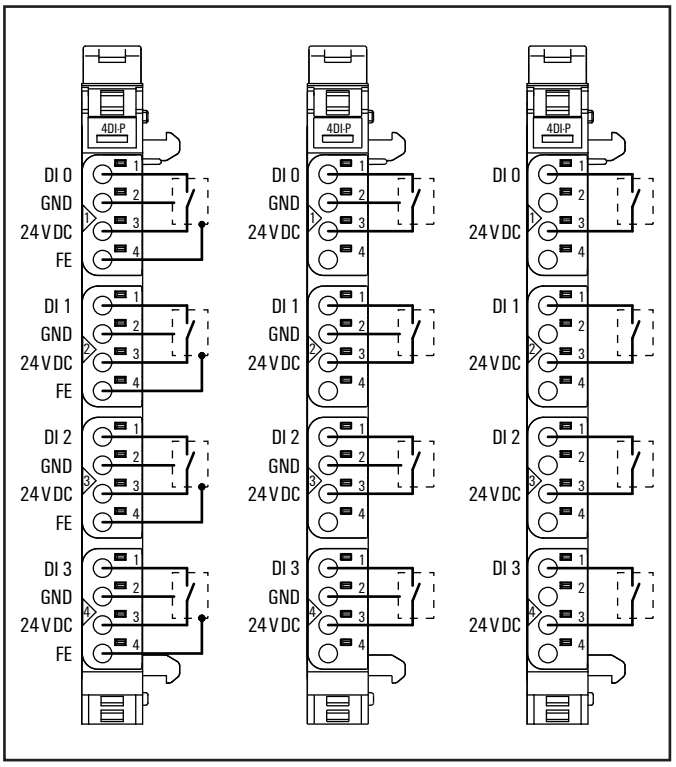

Connection diagram UR20-4DI-P

The digital input module UR20-4DI-P can detect up to 4 binary control signals. One sensor can be connected to each connector using a 2-wire, 3-wire or 3-wire + FE connection. A status LED is assigned to each channel. The module electronics supply the connected sensors with power from the input current path (I_{IN}).

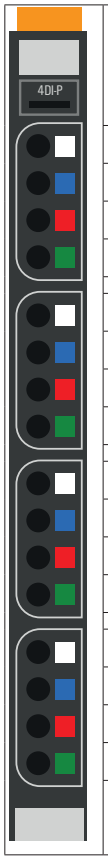

	Module status LED Green: Communication over the system bus Red: Error
1.1	Yellow: Input 0 active
2.1	Yellow: Input 1 active
3.1	Yellow: Input 2 active
4.1	Yellow: Input 3 active

LED indicators UR20-4DI-P, troubleshooting see Chapter 12

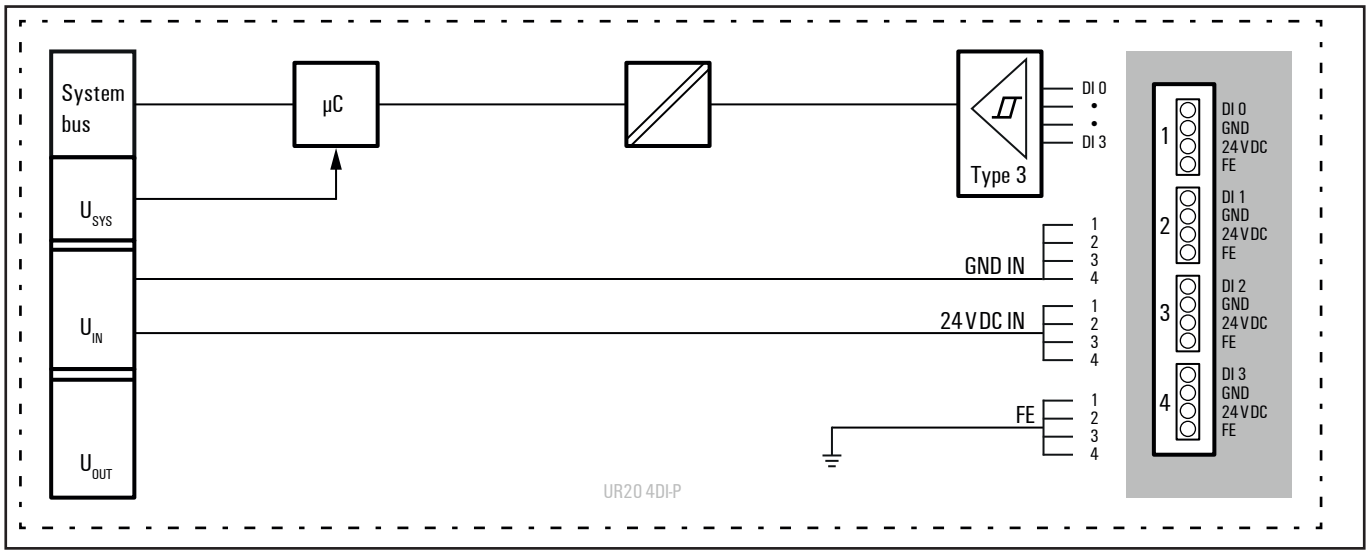

Block diagram UR20-4DI-P

Technical data UR20-4DI-P (Item No. 1315170000)

System data	
Data	Process, parameter and diagnostic data depend on the coupler used, see coupler description.
Interface	u-remote system bus
System bus transfer rate	48 Mbps
Inputs	
Number	4
Input type	P-switching, for Type 1 and Type 3 sensors as per IEC 61131-2
Input filter	Input delay adjustable from 0 to 40 ms
Low input voltage	< + 5 V referred to 0 V of the input power supply U_{IN}
High input voltage	> + 11 V referred to 0 V of the input power supply U_{IN}
Sensor supply	max. 2 A per plug, total max. 8 A
Sensor connection	2-wire, 3-wire, 3-wire + FE
Reverse polarity protection	yes
Module diagnosis	yes
Individual channel diagnosis	no
Supply	
Supply voltage	24 V DC +20 %/-15 %
Current consumption from system current path I_{SYS}	8 mA
Current consumption from input current path I_{IN}	< 10 mA + sensor supply current
General data	
Weight (operational status)	87 g
For additional general data, see Section 3.4	

Overview of the editable parameter UR20-4DI-P

Channel	Description	Options[1)]	Default
0 ... 3	Input delay	no (0) / 0,3 ms (1) / 3 ms (2) / 10 ms (3) / 20 ms (4) / 40 ms (5)	3 ms

1) Values in brackets for Modbus-TCP (firmware version 02.00.00 and higher), CANopen, EtherCAT and EtherNet/IP via module parameter class

Diagnostic data UR20-4DI-P

Name	Bytes	Bit	Description	Default
Error indicator	0	0	Module error	
		1	Internal error	
		2	External error	
		3	Channel error	0
		4	Error	
		5	Reserved	0
		6	Reserved	0
		7	Parameter error	
Module type	1	0	Module Type	0x0F
		1		
		2		
		3		
		4	Reserved	0
		5	Reserved	0
		6	Reserved	0
		7	Reserved	0
Error byte 2	2	0 - 7	Reserved	0
Error byte 3	3	0 - 2	Reserved	0
		3	Internal diagnostic FIFO full	0
		4 ... 7	Reserved	0
Channel type	4	0 - 6	Channel type	0x70
		7	Reserved	0
Diagnostic bits per channel	5		Number of diagnostic bit per channel	0
Number of channels	6		Number of similar channels per module	4
Channel error	7 - 10	0 - 31	Reserved	0
Channel 0 error to Channel 31 error	11 to 42	0 - 7	Reserved	0
Time stamp	43 - 46		Time stamp [µs] (32 bit)	

Process data inputs UR20-4DI-P

Byte	Bit	Description
IB0	IX0.0	DI0
	IX0.1	DI1
	IX0.2	DI2
	IX0.3	DI3
	IX0.4	Reserved
	IX0.5	Reserved
	IX0.6	Reserved
	IX0.7	Reserved

6.2 Digital input module UR20-4DI-P-3W

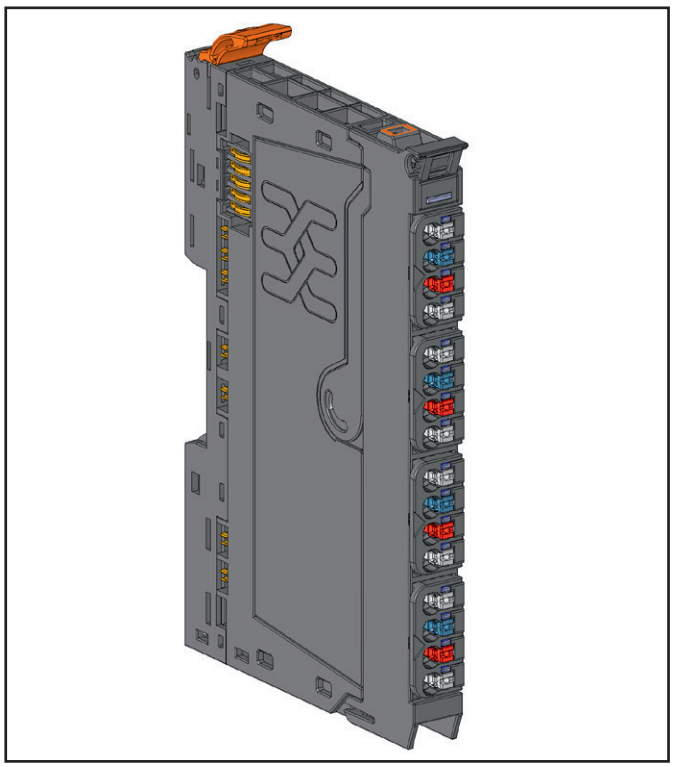

Digital input module UR20-4DI-P-3W (Item No. 2009360000)

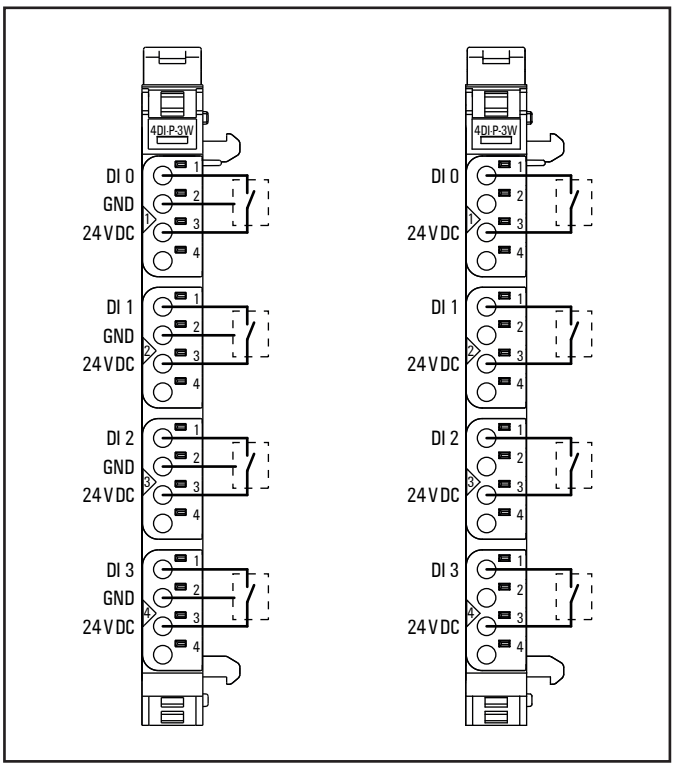

Connection diagram UR20-4DI-P-3W

The digital input module UR20-4DI-P-3W can detect up to 4 binary control signals. One sensor can be connected to each connector using a 2-wire, 3-wire connection. A status LED is assigned to each channel. The module electronics supply the connected sensors with power from the input current path (I_{IN}).

The not connected fourth pin may only be used for signals from the same circuit like the other signals of this plug.

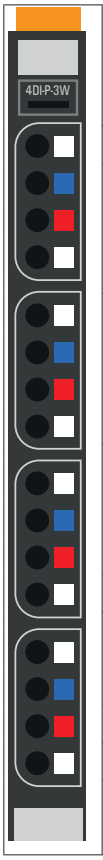

	Module status LED Green: Communication over the system bus Red: Error
1.1	Yellow: Input 0 active
2.1	Yellow: Input 1 active
3.1	Yellow: Input 2 active
4.1	Yellow: Input 3 active

LED indicators UR20-4DI-P-3W, troubleshooting see Chapter 12

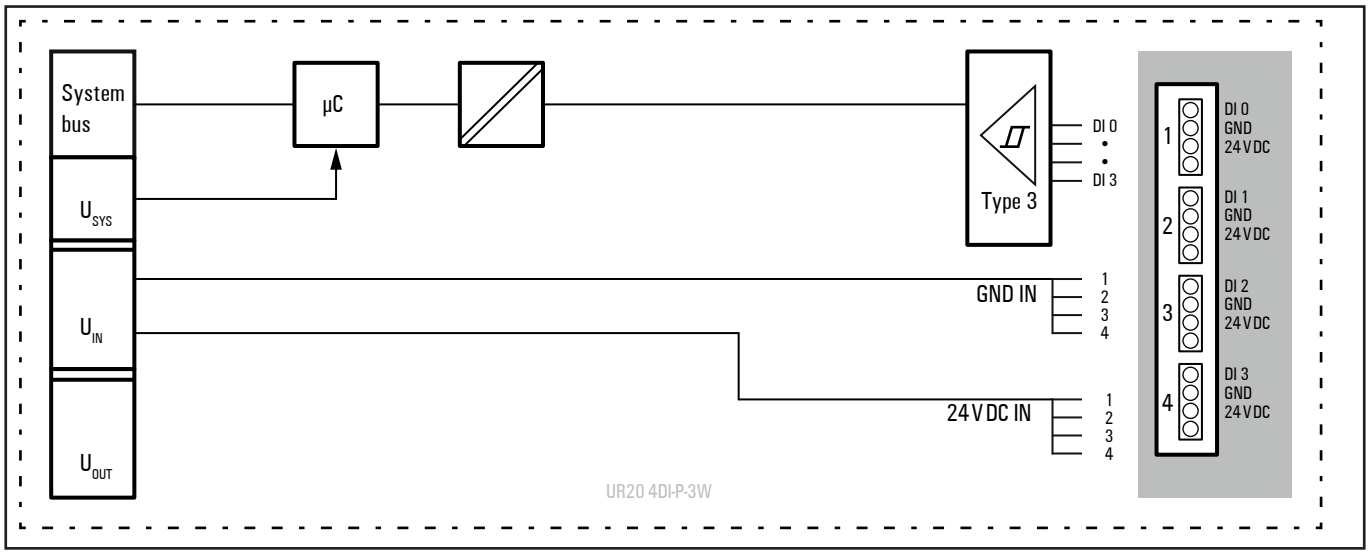

Block diagram UR20-4DI-P

Technical data UR20-4DI-P-3W (Item No. 2009360000)

System data	
Data	Process, parameter and diagnostic data depend on the coupler used, see coupler description.
Interface	u-remote system bus
System bus transfer rate	48 Mbps
Inputs	
Number	4
Input type	P-switching, for Type 1 and Type 3 sensors as per IEC 61131-2
Input filter	Input delay adjustable from 0 to 40 ms
Low input voltage	< + 5 V referred to 0 V of the input power supply U_{IN}
High input voltage	> + 11 V referred to 0 V of the input power supply U_{IN}
Sensor supply	max. 2 A per plug, total max. 8 A
Sensor connection	2-wire, 3-wire
Reverse polarity protection	yes
Module diagnosis	yes
Individual channel diagnosis	no
Supply	
Supply voltage	24 V DC +20 %/-15 %
Current consumption from system current path I_{SYS}	8 mA
Current consumption from input current path I_{IN}	< 10 mA + sensor supply current
General data	
Weight (operational status)	87 g
For additional general data, see Section 3.4	

Overview of the editable parameter UR20-4DI-P-3W

Channel	Description	Options[1)]	Default
0 ... 3	Input delay	no (0) / 0,3 ms (1) / 3 ms (2) / 10 ms (3) / 20 ms (4) / 40 ms (5)	3 ms

1) Values in brackets for Modbus-TCP (firmware version 02.00.00 and higher), CANopen, EtherCAT and EtherNet/IP via module parameter class

Diagnostic data UR20-4DI-P-3W

Name	Bytes	Bit	Description	Default
Error indicator	0	0	Module error	
		1	Internal error	
		2	External error	
		3	Channel error	0
		4	Error	
		5	Reserved	0
		6	Reserved	0
		7	Parameter error	
Module type	1	0	Module Type	0x0F
		1		
		2		
		3		
		4	Reserved	0
		5	Reserved	0
		6	Reserved	0
		7	Reserved	0
Error byte 2	2	0 - 7	Reserved	0
Error byte 3	3	0 - 2	Reserved	0
		3	Internal diagnostic FIFO full	0
		4 ... 7	Reserved	0
Channel type	4	0 - 6	Channel type	0x70
		7	Reserved	0
Diagnostic bits per channel	5		Number of diagnostic bit per channel	0
Number of channels	6		Number of similar channels per module	4
Channel error	7 - 10	0 - 31	Reserved	0
Channel 0 error to Channel 31 error	11 to 42	0 - 7	Reserved	0
Time stamp	43 - 46		Time stamp [µs] (32 bit)	

Process data inputs UR20-4DI-P-3W

Byte	Bit	Description
IB0	IX0.0	DI0
	IX0.1	DI1
	IX0.2	DI2
	IX0.3	DI3
	IX0.4	Reserved
	IX0.5	Reserved
	IX0.6	Reserved
	IX0.7	Reserved

6.3 Digital input module UR20-8DI-P-2W

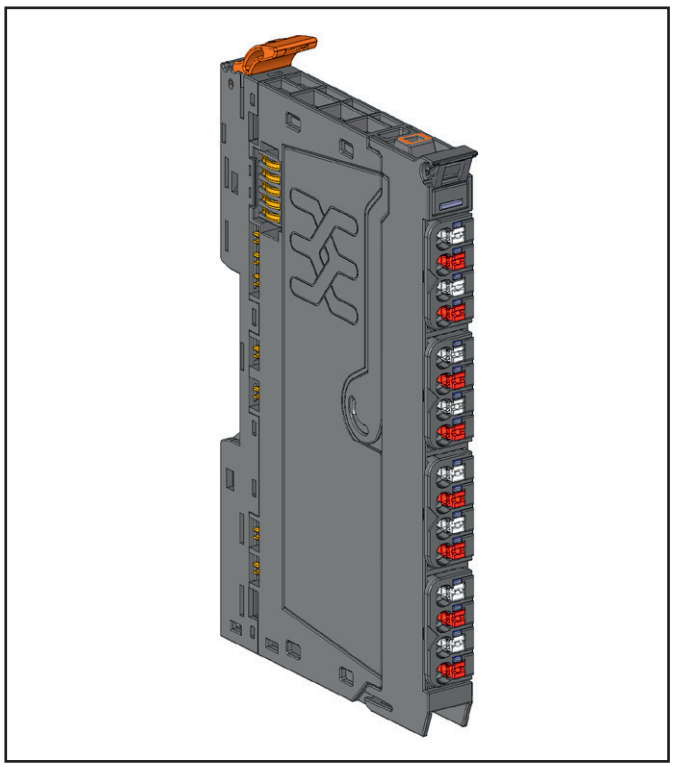

Digital input module UR20-8DI-P-2W (Item No. 1315180000)

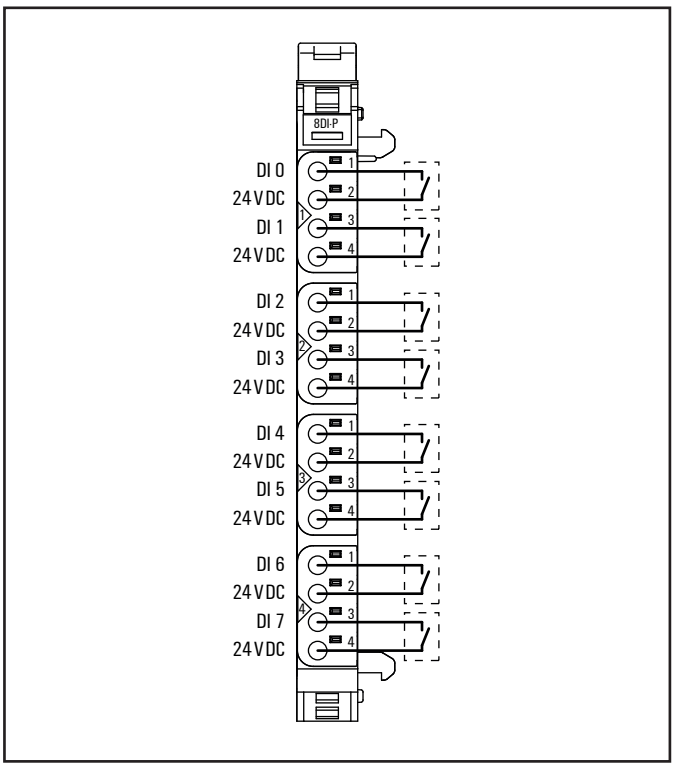

Connection diagram UR20-8DI-P-2W

The digital input module UR20-8DI-P-2W can detect up to 8 binary control signals. Two sensors can be connected to each connector using a 2-wire connection. A status LED is assigned to each channel. The module electronics supply the connected sensors with power from the input current path (I_{IIN}).

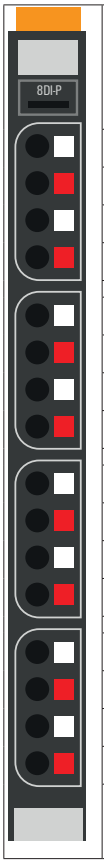

	Module status LED Green: Communication over the system bus Red: Error
1.1	Yellow: Input 0 active
1.3	Yellow: Input 1 active
2.1	Yellow: Input 2 active
2.3	Yellow: Input 3 active
3.1	Yellow: Input 4 active
3.3	Yellow: Input 5 active
4.1	Yellow: Input 6 active
4.3	Yellow: Input 7 active

LED indicators UR20-8DI-P-2W, troubleshooting see Chapter 12

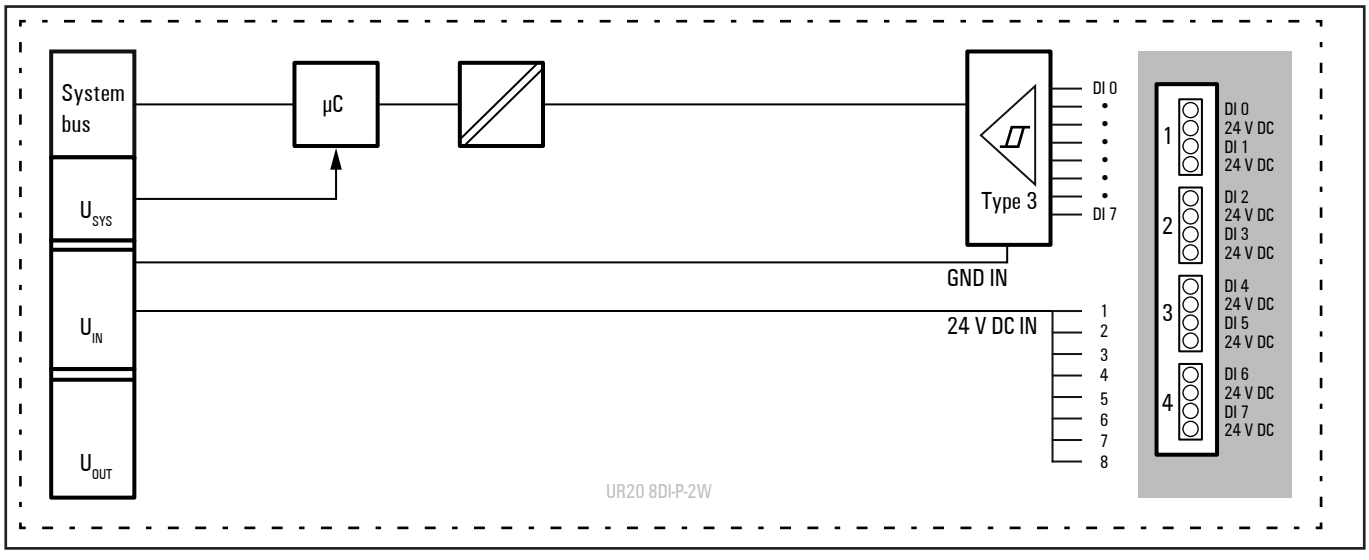

Block diagram UR20-8DI-P-2W

Technical data UR20-8DI-P-2W (Item No. 1315180000)

System data	
Data	Process, parameter and diagnostic data depend on the coupler used, see coupler description.
Interface	u-remote system bus
System bus transfer rate	48 Mbps
Inputs	
Number	8
Input type	P-switching, for Type 1 and Type 3 sensors as per IEC 61131-2
Input filter	Input delay adjustable from 0 to 40 ms
Low input voltage	< + 5 V referred to 0 V of the input power supply U_{IN}
High input voltage	> + 11 V referred to 0 V of the input power supply U_{IN}
Sensor supply	max. 2 A per plug, total max. 8 A
Sensor connection	2-wire
Reverse polarity protection	yes
Module diagnosis	yes
Individual channel diagnosis	no
Supply	
Supply voltage	24 V DC +20 %/-15 %
Current consumption from system current path I_{SYS}	8 mA
Current consumption from input current path I_{IN}	< 30 mA + sensor supply current
General data	
Weight (operational status)	85 g
For additional general data, see Section 3.4	

Overview of the editable parameters UR20-8DI-P-2W

Channel	Description	Options[1)]	Default
0 ... 7	Input delay	no (0) / 0,3 ms (1) / 3 ms (2) / 10 ms (3) / 20 ms (4) / 40 ms (5)	3 ms

1) Values in brackets for Modbus-TCP (firmware version 02.00.00 and higher), CANopen, EtherCAT and EtherNet/IP via module parameter class

Diagnostic data UR20-8DI-P-2W

Name	Byte	Bit	Description	Default
Error indicator	0	0	Module error	
		1	Internal error	
		2	External error	
		3	Channel error	0
		4	Error	
		5	Reserved	0
		6	Reserved	0
		7	Parameter error	
Module type	1	0	Module Type	0x0F
		1		
		2		
		3		
		4	Reserved	0
		5	Reserved	0
		6	Reserved	0
		7	Reserved	0
Error byte 2	2	0 ... 7	Reserved	0
Error byte 3	3	0 ... 2	Reserved	0
		3	Internal diagnostic FIFO full	0
		4 ... 7	Reserved	0
Channel type	4	0 ... 6	Channel type	0x70
		7	Reserved	0
Diagnostic bits per channel	5		Number of diagnostic bit per channel	0
Number of channels	6		Number of similar channels per module	8
Channel error	7 ... 10	0 ... 31	Reserved	0
Channel 0 error to Channel 31 error	11 ... 42	0 ... 7	Reserved	0
Time stamp	43-46		time stamp [µs] (32bit)	

Process data inputs UR20-8DI-P-2W

Byte	Bit	Description
IB0	IX0.0	DI0
	IX0.1	DI1
	IX0.2	DI2
	IX0.3	DI3
	IX0.4	DI4
	IX0.5	DI5
	IX0.6	DI6
	IX0.7	DI7

6.4 Digital input module UR20-8DI-P-3W

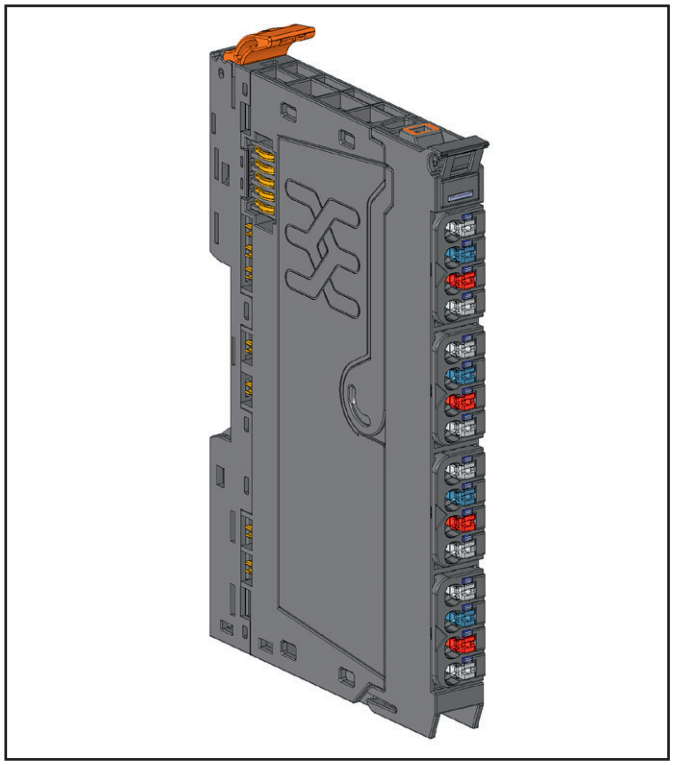

Digital input module UR20-8DI-P-3W (Item No. 1394400000)

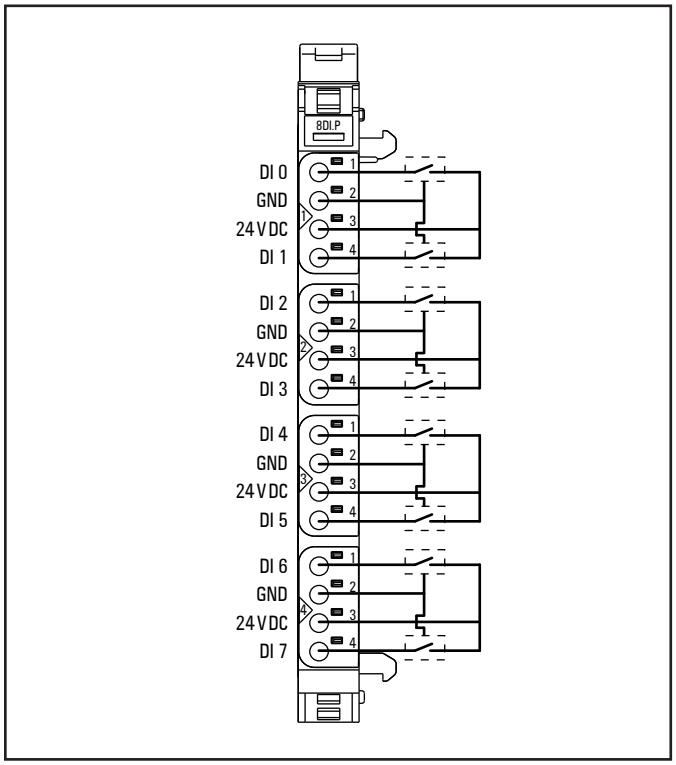

Connection diagram UR20-8DI-P-3W

The digital input module UR20-8DI-P-3W can detect up to 8 binary control signals. Two sensors can be connected to each connector using a 2-wire or 3-wire connection. A status LED is assigned to each channel. The module electronics supply the connected sensors with power from the input current path (I_{IIN}).

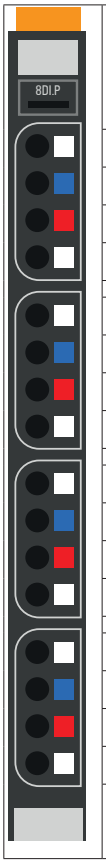

	Module status LED Green: Communication over the system bus Red: Error
1.1	Yellow: Input 0 active
1.4	Yellow: Input 1 active
2.1	Yellow: Input 2 active
2.4	Yellow: Input 3 active
3.1	Yellow: Input 4 active
3.4	Yellow: Input 5 active
4.1	Yellow: Input 6 active
4.4	Yellow: Input 7 active

LED indicators UR20-8DI-P-3W, troubleshooting see Chapter 12

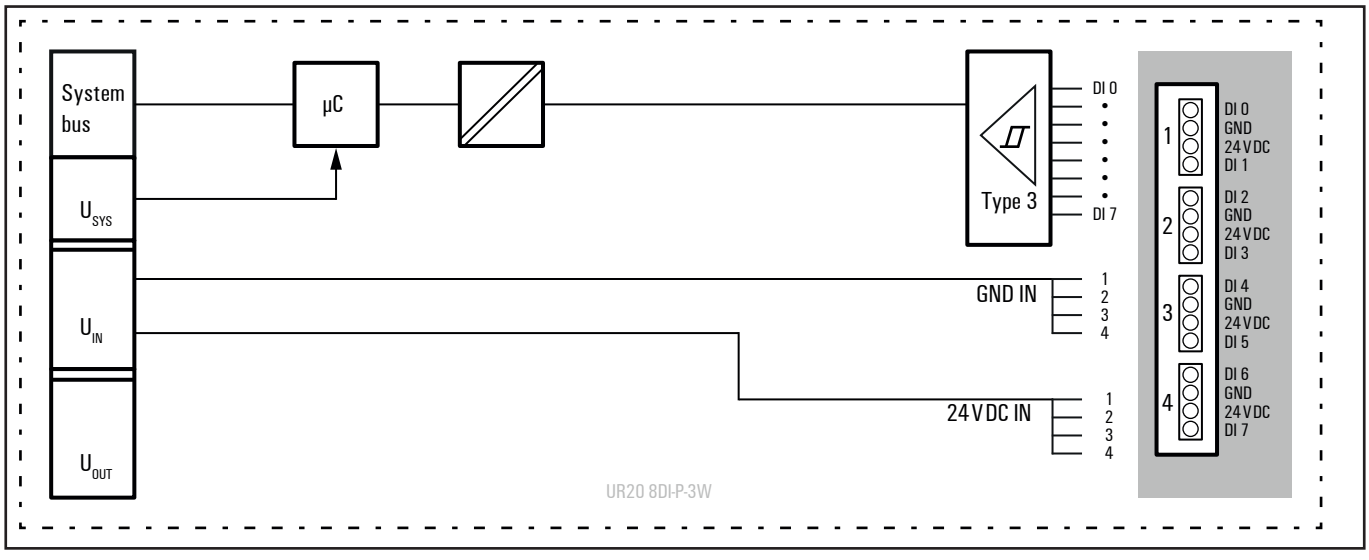

Block diagram UR20-8DI-P-3 W

Technical data UR20-8DI-P-3W (Item No. 1394400000)

System data	
Data	Process, parameter and diagnostic data depend on the coupler used, see coupler description.
Interface	u-remote system bus
System bus transfer rate	48 Mbps
Inputs	
Number	8
Input type	P-switching, for Type 1 and Type 3 sensors as per IEC 61131-2
Input filter	Input delay adjustable from 0 to 40 ms
Low input voltage	< + 5 V referred to 0 V of the input power supply U_{IN}
High input voltage	> + 11 V referred to 0 V of the input power supply U_{IN}
Sensor supply	max. 2 A per plug, total max. 8 A
Sensor connection	2-wire, 3-wire
Reverse polarity protection	yes
Module diagnosis	yes
Individual channel diagnosis	no
Supply	
Supply voltage	24 V DC +20 %/-15 %
Current consumption from system current path I_{SYS}	8 mA
Current consumption from input current path I_{IN}	< 30 mA + sensor supply current
General data	
Weight (operational status)	83 g
For additional general data, see Section 3.4	

Overview of the editable parameters UR20-8DI-P-3W

Channel	Description	Options[1)]	Default
0 ... 7	Input delay	no (0) / 0,3 ms (1) / 3 ms (2) / 10 ms (3) / 20 ms (4) / 40 ms (5)	3 ms

1) Values in brackets for Modbus-TCP (firmware version 02.00.00 and higher), CANopen, EtherCAT and EtherNet/IP via module parameter class

Diagnostic data UR20-8DI-P-3W

Name	Bytes	Bit	Description	Default
Error indicator	0	0	Module error	
		1	Internal error	
		2	External error	
		3	Channel error	0
		4	Error	
		5	Reserved	0
		6	Reserved	0
		7	Parameter error	
Module types	1	0	Module Type	0x0F
		1		
		2		
		3		
		4	Reserved	0
		5	Reserved	0
		6	Reserved	0
		7	Reserved	0
Error byte 2	2	0 - 7	Reserved	0
Error byte 3	3	0 - 2	Reserved	0
		3	Internal diagnostic FIFO full	0
		4 ... 7	Reserved	0
Channel type	4	0 - 6	Channel type	0x70
		7	Reserved	0
Diagnostic bits per channel	5		Number of diagnostic bit per channel	0
Number of channels	6		Number of similar channels per module	8
Channel error	7 - 10	0 - 31	Reserved	0
Channel 0 error to Channel 31 error	11 to 42	0 - 7	Reserved	0
Time stamp	43 - 46		Time stamp [µs] (32 bit)	

Process data inputs UR20-8DI-P-3W

Byte	Bit	Description
IB0	IX0.0	DI0
	IX0.1	DI1
	IX0.2	DI2
	IX0.3	DI3
	IX0.4	DI4
	IX0.5	DI5
	IX0.6	DI6
	IX0.7	DI7

6.5 Digital input module UR20-8DI-P-3W-HD

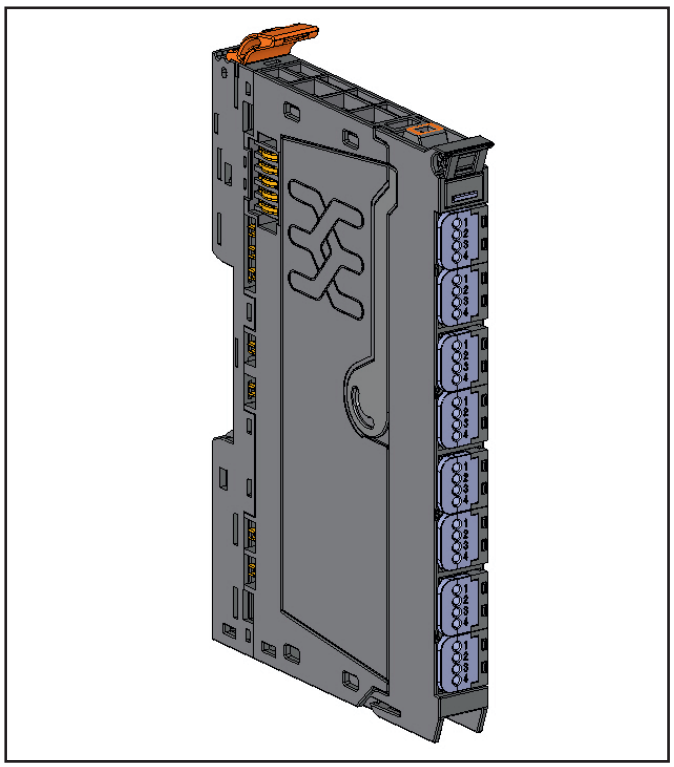

Digital input module UR20-8DI-P-3W-HD (Item No. 1315190000)

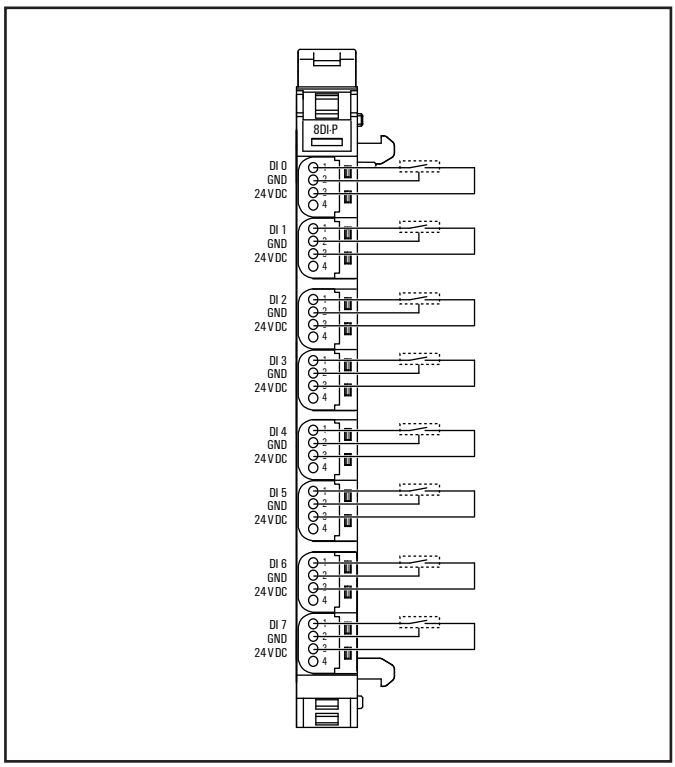

Connection diagram UR20-8DI-P-3W-HD

The digital input module UR20-8DI-P-3W-HD can detect up to 8 binary control signals. One sensor can be connected to each connector using a 2-wire or 3-wire connection (IDC). A status LED is assigned to each channel. The module electronics supply the connected sensors with power from the input current path (I_{IIN}).

The not connected fourth pin may only be used for signals from the same circuit like the other signals of this plug.

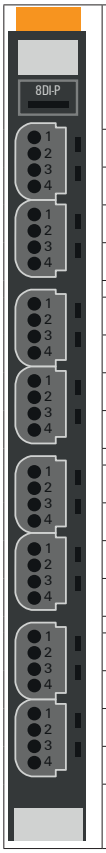

	Module status LED Green: Communication over the system bus Red: Error
1.1	Yellow: Input 0 active
2.1	Yellow: Input 1 active
3.1	Yellow: Input 2 active
4.1	Yellow: Input 3 active
5.1	Yellow: Input 4 active
6.1	Yellow: Input 5 active
7.1	Yellow: Input 6 active
8.1	Yellow: Input 7 active

LED indicators UR20-8DI-P-3W-HD, troubleshooting see Chapter 12

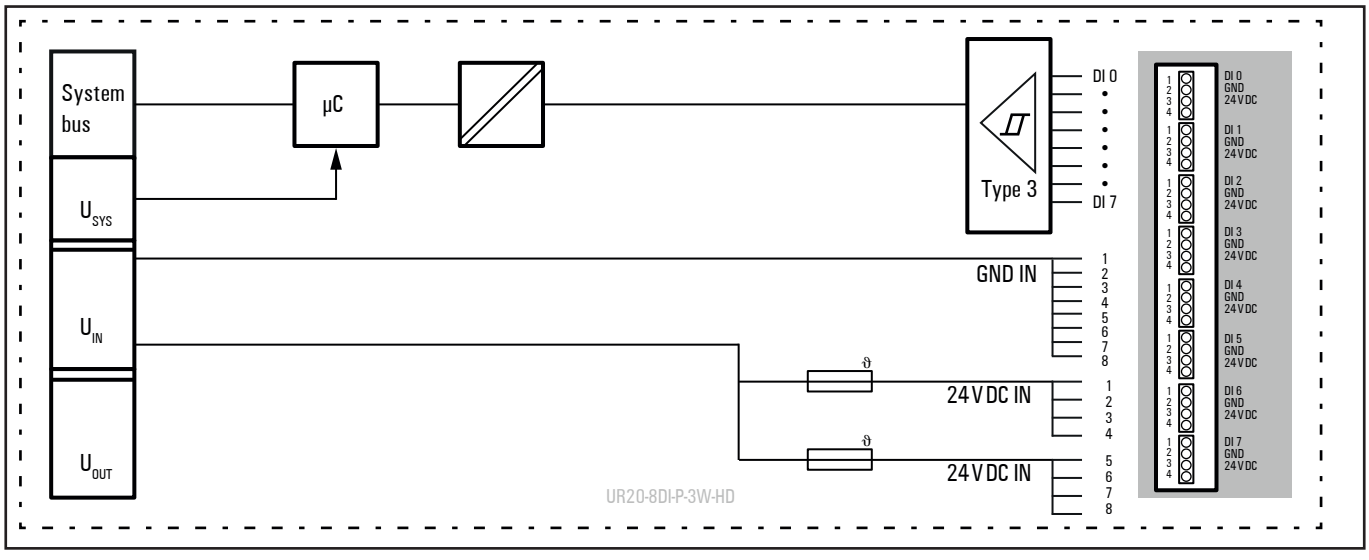

Block diagram UR20-8DI-P-3W-HD

Technical data UR20-8DI-P-3W-HD (Item No. 1315190000)

System data	
Data	Process, parameter and diagnostic data depend on the coupler used, see coupler description.
Interface	u-remote system bus
System bus transfer rate	48 Mbps
Inputs	
Number	8
Input type	P-switching, for Type 1 and Type 3 sensors as per IEC 61131-2
Input filter	Input delay adjustable from 0 to 40 ms
Low input voltage	< + 5 V referred to 0 V of the input power supply U_{IN}
High input voltage	> + 11 V referred to 0 V of the input power supply U_{IN}
Sensor supply	max. 125 mA per channel; both channel 0 … 3 and 4 … 7 respectively are fused combined
Sensor connection	2-wire, 3-wire
Reverse polarity protection	yes
Module diagnosis	yes
Individual channel diagnosis	no
Supply	
Supply voltage	24 V DC +20 %/-15 %
Current consumption from system current path I_{SYS}	8 mA
Current consumption from input current path I_{IN}	< 30 mA + sensor supply current
General data	
Weight (operational status)	85 g
For additional general data, see Section 3.4	

Overview of the editable parameters UR20-8DI-P-3W-HD

Channel	Description	Options[1)]	Default
0 … 7	Input delay	no (0) / 0,3 ms (1) / 3 ms (2) / 10 ms (3) / 20 ms (4) / 40 ms (5)	3 ms

1) Values in brackets for Modbus-TCP (firmware version 02.00.00 and higher), CANopen, EtherCAT and EtherNet/IP via module parameter class

Diagnostic data UR20-8DI-P-3W-HD

Name	Bytes	Bit	Description	Default
Error indicator	0	0	Module error	
		1	Internal error	
		2	External error	
		3	Channel error	0
		4	Error	
		5	Reserved	0
		6	Reserved	0
		7	Parameter error	
Module types	1	0	Module Type	0x0F
		1		
		2		
		3		
		4	Reserved	0
		5	Reserved	0
		6	Reserved	0
		7	Reserved	0
Error byte 2	2	0 - 7	Reserved	0
Error byte 3	3	0 - 2	Reserved	0
		3	Internal diagnostic FIFO full	0
		4 - 7	Reserved	0
Channel type	4	0 - 6	Channel type	0x70
		7	Reserved	0
Diagnostic bits per channel	5		Number of diagnostic bit per channel	0
Number of channels	6		Number of similar channels per module	8
Channel error	7 - 10	0 - 31	Reserved	0
Channel 0 error to Channel 31 error	11 to 42	0 - 7	Reserved	0
Time stamp	43 - 46		time stamp [µs] (32bit)	

Process data inputs UR20-8DI-P-3W-HD

Byte	Bit	Description
IB0	IX0.0	DI0
	IX0.1	DI1
	IX0.2	DI2
	IX0.3	DI3
	IX0.4	DI4
	IX0.5	DI5
	IX0.6	DI6
	IX0.7	DI7

6.6 Digital input module UR20-16DI-P

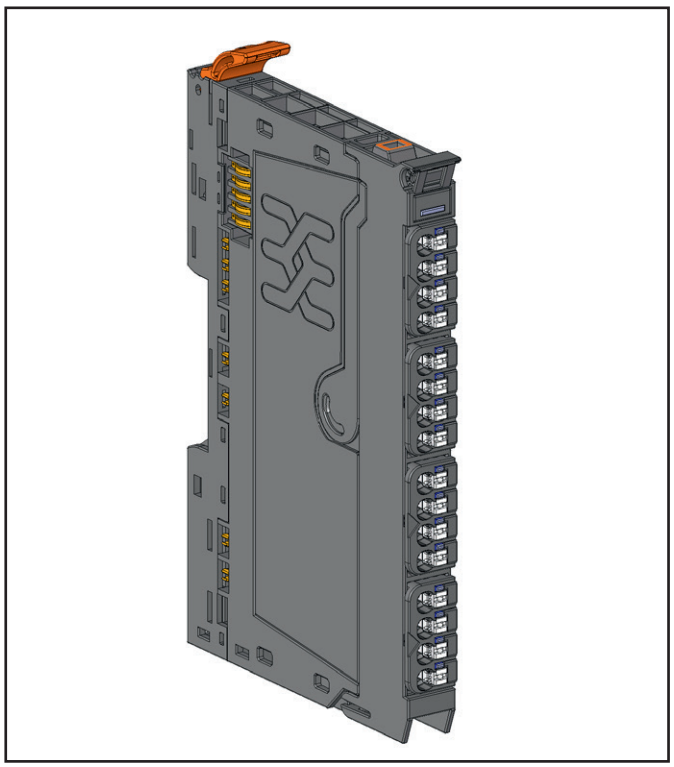

Digital input module UR20-16DI-P (Item No. 1315200000)

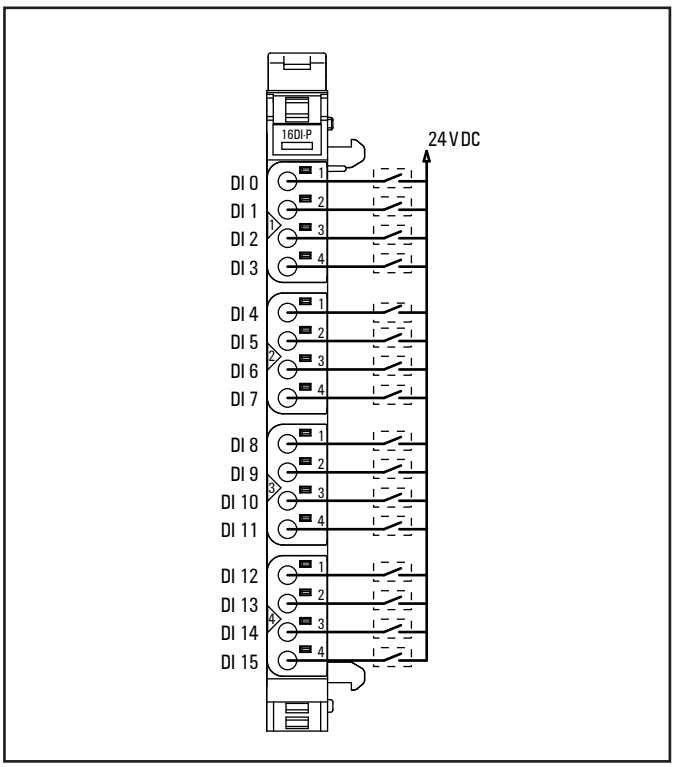

Connection diagram UR20-16DI-P

The UR20-16DI-P digital input module can detect up to 16 binary control signals. Four sensors can be connected to each connector in a 1-wire connection. A status LED is assigned to each channel. The connected sensors must be supplied with power from the input curent path I_{IN} (e.g. with potential distribution modules).

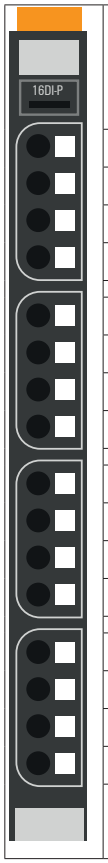

	Module status LED Green: Communication over the system bus Red: Error
1.1	Yellow: Input 0 active
1.2	Yellow: Input 1 active
1.3	Yellow: Input 2 active
1.4	Yellow: Input 3 active
2.1	Yellow: Input 4 active
2.2	Yellow: Input 5 active
2.3	Yellow: Input 6 active
2.3	Yellow: Input 7 active
3.1	Yellow: Input 8 active
3.2	Yellow: Input 9 active
3.3	Yellow: Input 10 active
3.4	Yellow: Input 11 active
4.1	Yellow: Input 12 active
4.2	Yellow: Input 13 active
4.3	Yellow: Input 14 active
4.4	Yellow: Input 15 active

LED indicators UR20-16DI-P, troubleshooting see Chapter 12

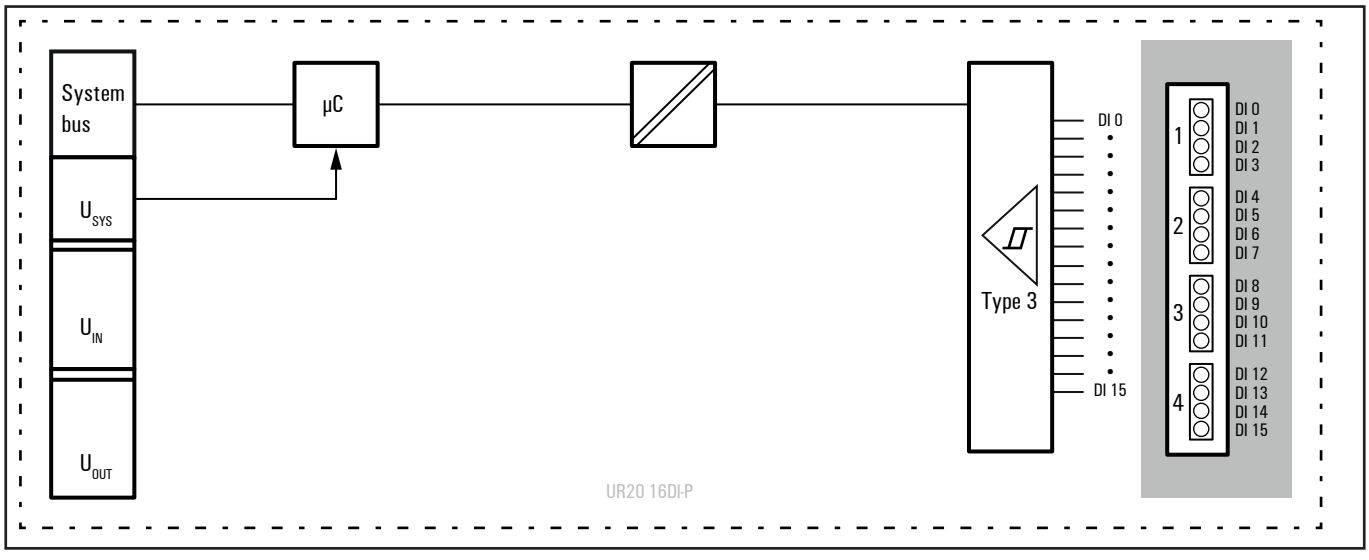

Block diagram UR20-16DI-P

Technical data UR20-16DI-P (Item No. 1315200000)

System data	
Data	Process and diagnostic data depend on the coupler used, see coupler description.
Interface	u-remote system bus
System bus transfer rate	48 Mbps
Inputs	
Number	16
Input type	P-switching, for Type 1 and Type 3 sensors as per IEC 61131-2
Input filter	Input delay 3 ms
Low input voltage	< + 5 V referred to 0 V of the input power supply U_{IN}
High input voltage	> + 11 V referred to 0 V of the input power supply U_{IN}
Sensor supply	no
Sensor connection	1-wire
Reverse polarity protection	yes
Module diagnosis	yes
Individual channel diagnosis	no
Supply	
Supply voltage	24 V DC +20 %/-15 %
Current consumption from system current path I_{SYS}	8 mA
Current consumption from input current path I_{IN}	< 25 mA
General data	
Weight (operational status)	87 g
For additional general data, see Section 3.4	

Diagnostic data UR20-16DI-P

Name	Bytes	Bit	Description	Default
Error indicator	0	0	Module error	
		1	Internal error	
		2	External error	
		3	Channel error	0
		4	Error	
		5	Reserved	0
		6	Reserved	0
		7	Parameter error	
Module type	1	0	Module Type	0x0F
		1		
		2		
		3		
		4	Reserved	0
		5	Reserved	0
		6	Reserved	0
		7	Reserved	0
Error byte 2	2	0 – 7	Reserved	0
Error byte 3	3	0 – 2	Reserved	0
		3	Internal diagnostic FIFO full	0
		4 … 7	Reserved	0
Channel type	4	0 – 6	Channel type	0x70
		7	Reserved	0
Diagnostic bits per channel	5		Number of diagnostic bit per channel	0
Number of channels	6		Number of similar channels per module	0
Channel error	7 – 10	0 – 31	Reserved	0
Channel 0 error to Channel 31 error	11 to 42	0 – 7	Reserved	0
Time stamp	43 – 46		Time stamp [µs] (32 bit)	

Process data[1] inputs UR20-16DI-P

Byte	Bit	Description
IB0	IX0.0	DI0
	IX0.1	DI1
	IX0.2	DI2
	IX0.3	DI3
	IX0.4	DI4
	IX0.5	DI5
	IX0.6	DI6
	IX0.7	DI7
IB1	IX1.0	DI8
	IX1.1	DI9
	IX1.2	DI10
	IX1.3	DI11
	IX1.4	DI12
	IX1.5	DI13
	IX1.6	DI14
	IX1.7	DI15

1) Internal process data mapping with data format “Standard”. Depending on the fieldbus specification and the data format of the communicating fieldbus components the bytes and/or words can be reversed during data transfer.

6.7 Digital input module UR20-16DI-P-PLC-INT

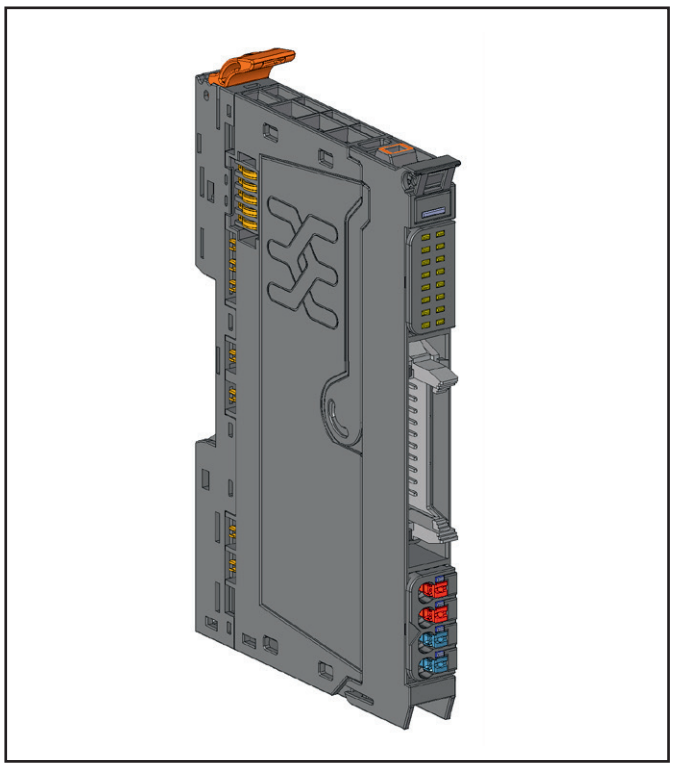

Digital input module UR20-16DI-P-PLC-INT (Item No. 1315210000)

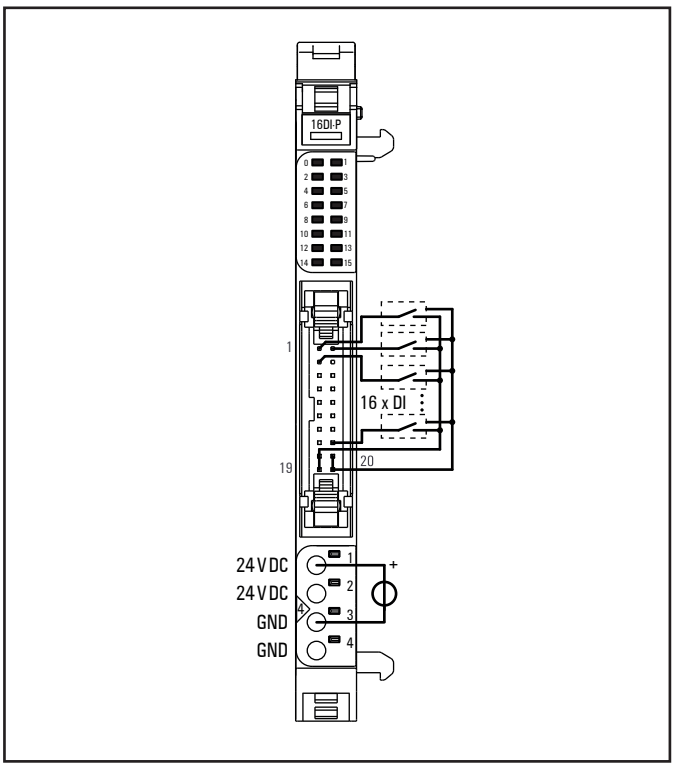

Connection diagram UR20-16DI-P-PLC-INT

The UR20-16DI-P-PLC-INT digital input module can detect up to 16 binary control signals. The sensors are connected via a 20-pole PLC connection. A status LED is assigned to each channel in a separate block.

The module as well as the sensors are supplied by one of both plugs. Each contact of the PLC plug can be loaded with 1 A at maximum. In case the module is supplied via the 4-pole feed-in plug, the current drain via the PLC plug using its four contacts is limited to 2 A at maximum. An appropriate fuse has to be provided.

The power supply of the peripherals connected has to be calculated for each individual installation situation. When using a flat ribbon cable, please regard its higher internal resistance!

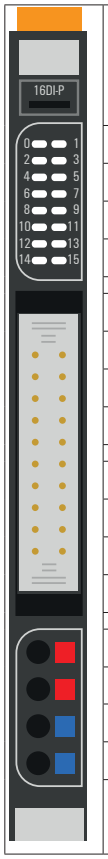

	Module status LED Green: Communication over the system bus Red: Error
0	Yellow: Input 0 active
1	Yellow: Input 1 active
to	to
15	Yellow: Input 15 active
4.1	Green: Supply voltage feed-in plug > 18 V DC
4.2	Red: Error on the supply voltage of the feed-in plug

LED indicators UR20-16DI-P-PLC-INT, troubleshooting see Chapter 12

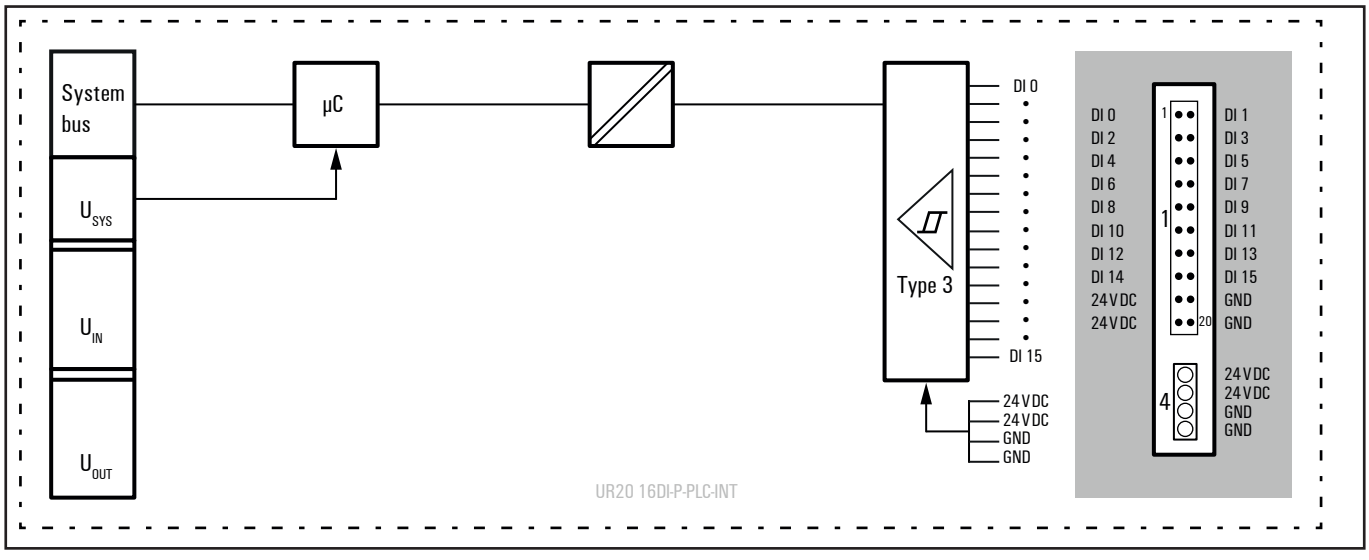

Block diagram UR20-16DI-P-PLC-INT

Technical data UR20-16DI-P-PLC-INT (Item No. 1315210000)

System data	
Data	Process and diagnostic data depend on the coupler used, see coupler description.
Interface	u-remote system bus
System bus transfer rate	48 Mbps
Inputs	
Number	16
Input type	P-switching, for Type 1 and Type 3 sensors as per IEC 61131-2
Input filter	Input delay 3 ms
Low input voltage	< + 5 V referred to 0 V of the input power supply U_{IN}
High input voltage	> + 11 V referred to 0 V of the input power supply U_{IN}
Sensor supply	External
Sensor connection	PLC interface unit
Reverse polarity protection	yes
Module diagnosis	yes
Individual channel diagnosis	no
Supply	
Supply voltage	24 V DC +20 %/-15 %
Current consumption from system current path I_{SYS}	8 mA
Current consumption	< 25 mA, power supply via feed-in plug or PLC connection
General data	
Weight (operational status)	82 g
For additional general data, see Section 3.4	

Diagnostic data UR20-16DI-P-PLC-INT

Name	Bytes	Bit	Description	Default
Error indicator	0	0	Module error	
		1	Internal error	
		2	External error	
		3	Channel error	0
		4	Error	
		5	Reserved	0
		6	Reserved	0
		7	Parameter error	
Module type	1	0	Module Type	0x0F
		1		
		2		
		3		
		4	Reserved	0
		5	Reserved	0
		6	Reserved	0
		7	Reserved	0
Error byte 2	2	0 - 7	Reserved	0
Error byte 3	3	0 - 2	Reserved	0
		3	Internal diagnostic FIFO full	0
		4 - 7	Reserved	0
Channel type	4	0 - 6	Channel type	0x70
		7	Reserved	0
Diagnostic bits per channel	5		Number of diagnostic bit per channel	0
Number of channels	6		Number of similar channels per module	0
Channel error	7 - 10	0 - 31	Reserved	0
Channel 0 error to Channel 31 error	11 to 42	0 - 7	Reserved	0
Time stamp	43 - 46		Time stamp [µs] (32 bit)	

Process data[1] inputs UR20-16DI-P-PLC-INT

Byte	Bit	Description
IB0	IX0.0	DI0
	IX0.1	DI1
	IX0.2	DI2
	IX0.3	DI3
	IX0.4	DI4
	IX0.5	DI5
	IX0.6	DI6
	IX0.7	DI7
IB1	IX1.0	DI8
	IX1.1	DI9
	IX1.2	DI10
	IX1.3	DI11
	IX1.4	DI12
	IX1.5	DI13
	IX1.6	DI14
	IX1.7	DI15

1) Internal process data mapping with data format “Standard”. Depending on the fieldbus specification and the data format of the communicating fieldbus components the bytes and/or words can be reversed during data transfer.

6.8 Digital input module with time stamp UR20-2DI-P-TS

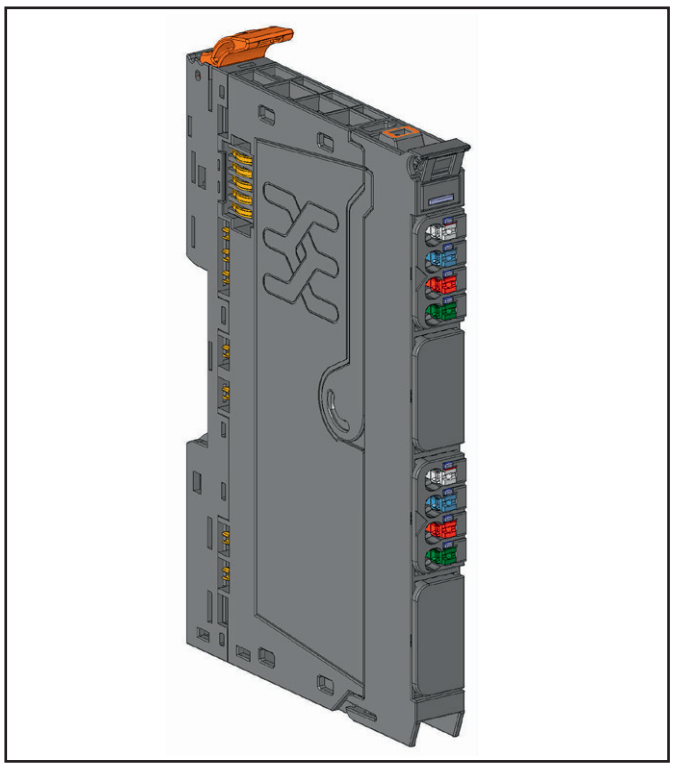

Digital input module UR20-2DI-P-TS (Item No. 1460140000)

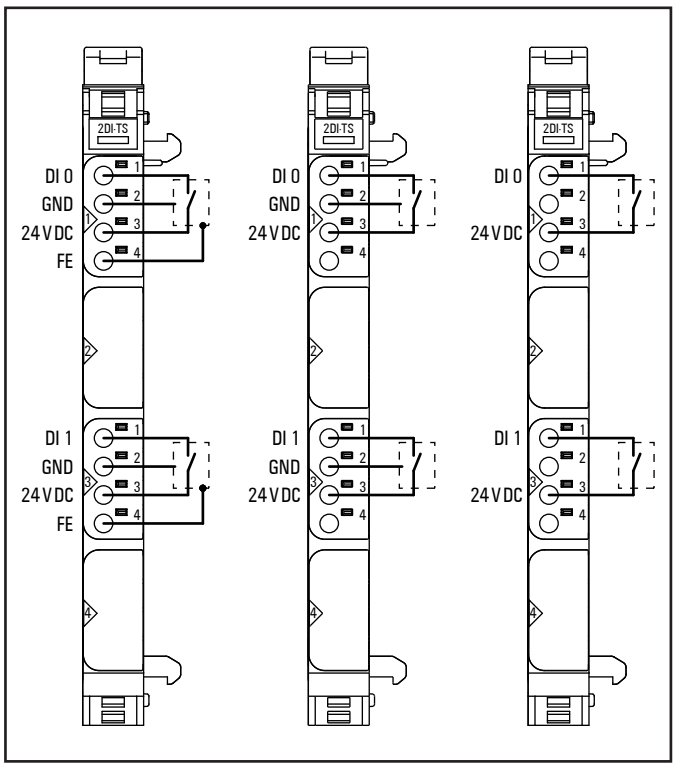

Connection diagram UR20-2DI-P-TS

The UR20-2DI-P-TS module with time stamp function is a special type of digital input module, e.g. for measuring time differences between signal edges. The module can detect up to two binary signals. One sensor can be connected to each connector using a 2-wire, 3-wire or 3-wire connection + FE. A status LED is assigned to each channel. The module electronics supply the connected sensors with power from the input current path (I_{IN}).

The process data of this module contain a ring buffer with either 5 or 15 entries, depending on parameter setup. A new entry in the ring buffer can be generated by an edge event which also can be parameterised. Each entry contains a time stamp with a resolution of 1 µs, the process image of the input channels at the respective point of time and a running number.

The process image in the latest entry of the ring buffer doesn't necessarily represent the current state of the physical inputs. To achieve this, both time stamps on rising and falling edges need to be activated for all channels.

For standard digital input applications, please use input modules without time stamp function.

Modules with time stamp function UR20-2DI-P-TS and UR20-4DI-P-TS are not supported by the UR20-FBC-CC coupler.



	Module status LED Green: Communication over the system bus Red: Error
1.1	Yellow: Input 0 active
3.1	Yellow: Input 1 active

LED indicators UR20-2DI-P-TS, troubleshooting see Chapter 12

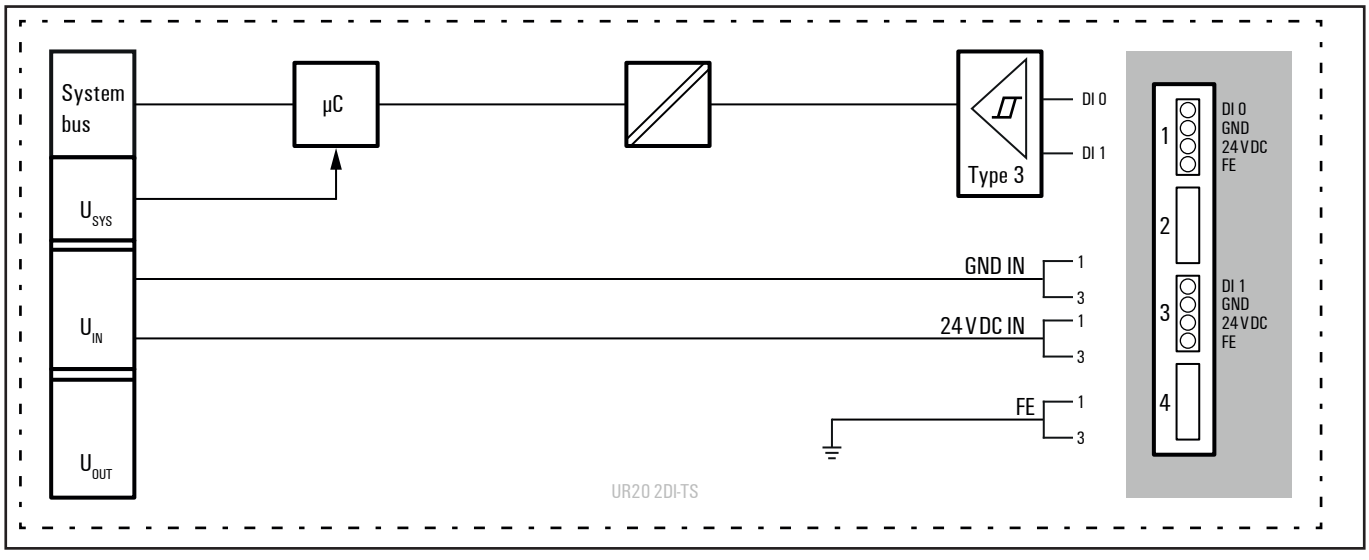

Block diagram UR20-2DI-P-TS

Technical data UR20-2DI-P-TS (Item No. 1460140000)

System data	
Data	Process, parameter and diagnostic data depend on the coupler used, see coupler description.
Interface	u-remote system bus
System bus transfer rate	48 Mbps
Inputs	
Number	2
Input type	P-switching, for Type 1 and Type 3 sensors as per IEC 61131-2
Input filter	Input delay adjustable from 0 to 40 ms
Low input voltage	< + 5 V referred to 0 V of the input power supply U_{IN}
High input voltage	> + 11 V referred to 0 V of the input power supply U_{IN}
Max. input current per channel	3 mA
Sensor supply	yes
Sensor connection	2-wire, 3-wire, 3-wire + FE
Reverse polarity protection	yes
Module diagnosis	yes
Individual channel diagnosis	no
Time stamp data width	16 bits
Time stamp resolution	1 µs
Supply	
Supply voltage	24 V DC +20 %/-15 %
Current consumption from system current path I_{SYS}	8 mA
Current consumption from input current path I_{IN}	10 mA + sensor supply current
General data	
Weight (operational status)	83 g
For additional general data, see Section 3.4	

Overview of the editable parameter UR20-2DI-P-TS

Channel	Description	Options[1)]	Default
	Process data size	20 Byte (0) / 60 Byte (1)	60 Byte
0 ... 1	Input delay	no (0) / 0,3 ms (1) / 3 ms (2) / 10 ms (3) / 20 ms (4) / 40 ms (5)	3 ms
0 ... 1	TimeStamp at edge 0-1	disabled (0) / enabled (1)	disabled
0 ... 1	TimeStamp at edge 1-0	disabled (0) / enabled (1)	disabled

1) Values in brackets for Modbus-TCP (firmware version 02.00.00 and higher), CANopen, EtherCAT and EtherNet/IP via module parameter class

Diagnostic data UR20-2DI-P-TS

Name	Bytes	Bit	Description	Default
Error indicator	0	0	Module error	
		1	Internal error	
		2	External error	
		3	Channel error	0
		4	Error	
		5	Reserved	0
		6	Reserved	0
		7	Parameter error	
Module type	1	0	Module Type	0x0F
		1		
		2		
		3		
		4	Reserved	0
		5	Reserved	0
		6	Reserved	0
		7	Reserved	0
Error byte 2	2	0 - 7	Reserved	0
Error byte 3	3	0 - 2	Reserved	0
		3	Internal diagnostic FIFO full	0
		4 - 7	Reserved	0
Channel type	4	0 - 6	Channel type	0x70
		7	Reserved	0
Diagnostic bits per channel	5		Number of diagnostic bit per channel	0
Number of channels	6		Number of similar channels per module	2
Channel error	7 - 10	0 - 31	Reserved	0
Channel 0 error to Channel 31 error	11 to 42	0 - 7	Reserved	0
Time stamp	43 - 46		time stamp [µs] (32 bit)	

Process data[1] inputs UR20-2DI-P-TS

Byte	Format	Name	Remark
IB0	Byte	Input image 1	Bit0 = DI0 ... Bit1 = DI1, Bit2 ... 7 reserved
IB1	Byte	Running number 1	0 ... 127 rotating
IB2	Wort	Time stamp 1	0 ... 65535 µs rotating
IB3			
IB4	Byte	Input image 2	
IB5	Byte	Running number 2	
IB6	Wort	Time stamp 2	
IB7			
IB8	Byte	Input image 3	
IB9	Byte	Running number 3	
IB10	Wort	Time stamp 3	
IB11			
...	...	...	
IB56	Byte	Input image 15	
IB57	Byte	Running number 15	
IB58	Wort	Time stamp 15	
IB59			

1) Internal process data mapping with data format “Standard”. Depending on the fieldbus specification and the data format of the communicating fieldbus components the bytes and/or words can be reversed during data transfer.

Time stamp function

With time stamp function (ETS = edge time stamp) enabled, at every corresponding edge the time value of the timer is stored in the process image as an ETS entry together with the status of the inputs and a running number.

The module does not use any bytes in the output range. It uses 60 Bytes in the input range for 15 ETS entries each with 4 bytes.

Structure of an ETS entry

Input image PII
After the edge transition, the status of the inputs is stored here. The input byte has the following bit assignments:
Bit 0: DI 0
Bit 1: DI 1
Bit 2 ... 7: reserved (0)

Running Nummer RN
The RN (running number) is a consecutive number from 0 to 127. It describes the chronological sequence of the edges.

Time stamp ETS_US
The 16-bit timer (0 ... 65535µs) in the u-remote module is started as soon as the power supply is switched on and after (2^{16}-1) µs restarts at 0.

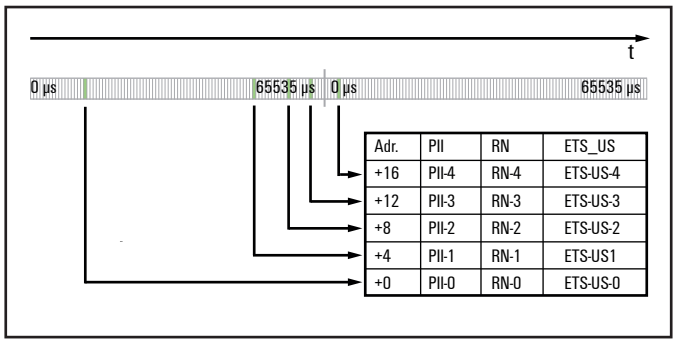

Structure of the ETS entries in the input range in chronological order.

Example for the mode of operation

The following example shows the sequence in which ETS entries are stored. The input channels are predefined as follows:

DI 0 and DI 1: time stamp at edge 0-1 enabled
DI 0 and DI 1: time stamp at edge 1-0 enabled

The ETS entries available at time "t" are designated by the green area in the diagram. ETS entries that are not (or no longer) available have a grey background

New ETS entries are always entered starting at address + 0 and already existing ETS entries are each shifted by 4 bytes.

Process image is empty at t_0

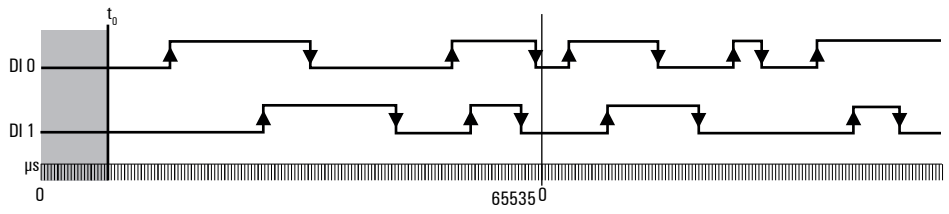

Address	PII	RN	ETS_US
+0			
+4			
+8			
+12			
+16			

1st ETS entry at t_1

A rising 0-1 edge on DI 0 causes the 1st ETS entry at address + 0.

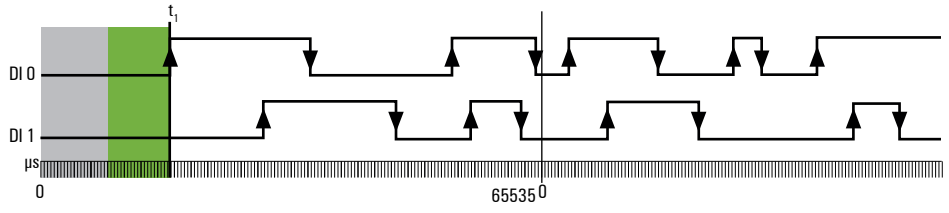

Address	PII	RN	ETS_US
+0	00000001	0	16875
+4			
+8			
+12			
+16			

2nd ETS entry at t_2

A rising 0-1 edge on DI 1 causes the 2nd ETS entry at address + 0. The 1st ETS entry is shifted by 4 bytes.

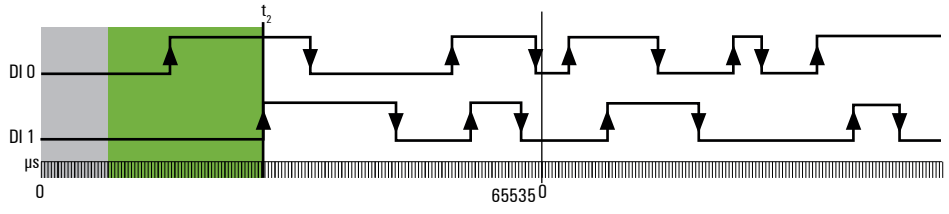

Address	PII	RN	ETS_US
+0	00000011	1	28344
+4	00000001	0	16875
+8			
+12			
+16			

3rd ETS entry at t_3

A falling 1-0 edge on DI 0 causes the 3rd ETS entry.

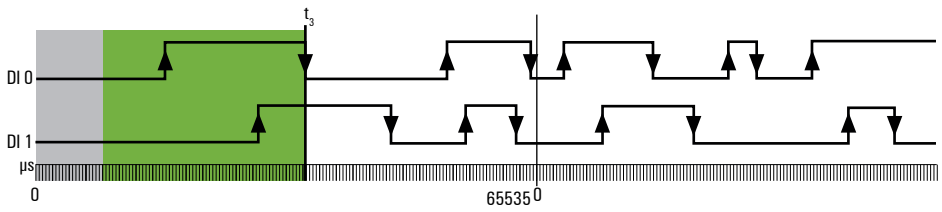

Address	PII	RN	ETS_US
+0	00000010	2	43194
+4	00000011	1	28344
+8	00000001	0	16875
+12			
+16			

... 4th to14th ETS entry ...

15. ETS entry at t_{15}

A rising 0-1 edge on DI 0 causes the15th ETS entry.

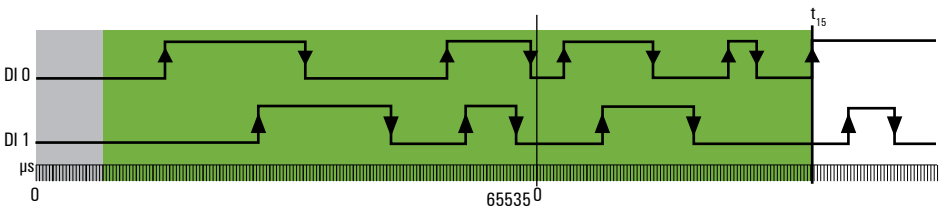

Address	PII	RN	ETS_US
+0	00000001	14	35717
+4	00000000	13	28344
+8	00000001	12	24576
+12	00000000	11	19988
+16	00000010	10	14745
+20	00000011	9	8192
+24	00000001	8	3277
+28	00000000	7	63896
+32	00000001	6	62422
+36	00000011	5	55869
+40	00000001	4	53247
+44	00000000	3	45875
+48	00000010	2	43194
+52	00000011	1	28344
+56	00000001	0	16875

16th ETS entry at t_{16}

A rising 0-1 edge on DI 1 causes the16th ETS entry. The 1st ETS entry is deleted and not available anymore.

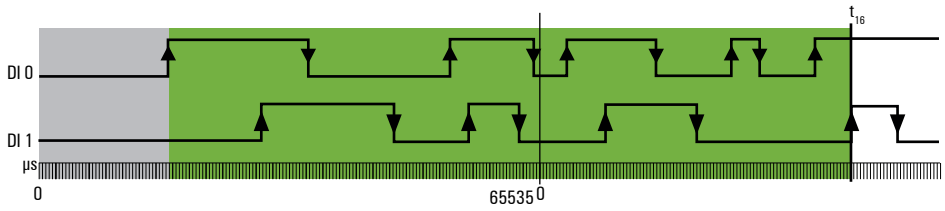

Address	PII	RN	ETS_US
+0	00000011	15	37683
+4	00000001	14	35717
+8	00000000	13	28344
+12	00000001	12	24576
+16	00000000	11	19988
+20	00000010	10	14745
+24	00000011	9	8192
+28	00000001	8	3277
+32	00000000	7	63896
+36	00000001	6	62422
+40	00000011	5	55869
+44	00000001	4	53247
+48	00000000	3	45875
+52	00000010	2	43194
+56	00000011	1	28344
	00000001	0	16875

17. ETS entry at t_{17}

A falling 1-0 edge on DI 1 causes the17th ETS entry. The 2nd ETS entry is deleted and not available anymore.

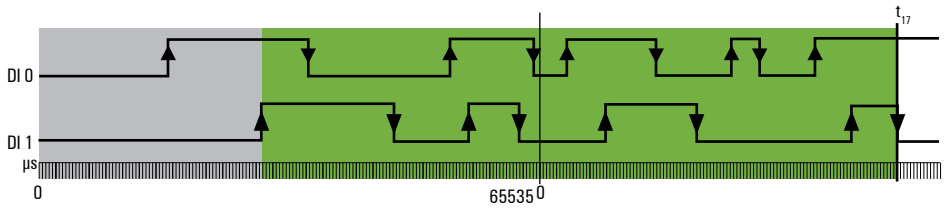

Address	PII	RN	ETS_US
+0	00000001	16	44236
+4	00000011	15	37683
+8	00000001	14	35717
+12	00000000	13	28344
+16	00000001	12	24576
+20	00000000	11	19988
+24	00000010	10	14745
+28	00000011	9	8192
+32	00000001	8	3277
+36	00000000	7	63896
+40	00000001	6	62422
+44	00000011	5	55869
+48	00000001	4	53247
+52	00000000	3	45875
+56	00000010	2	43194
	00000011	1	28344
	00000001	0	16875

6.9 Digital input module with time stamp UR20-4DI-P-TS

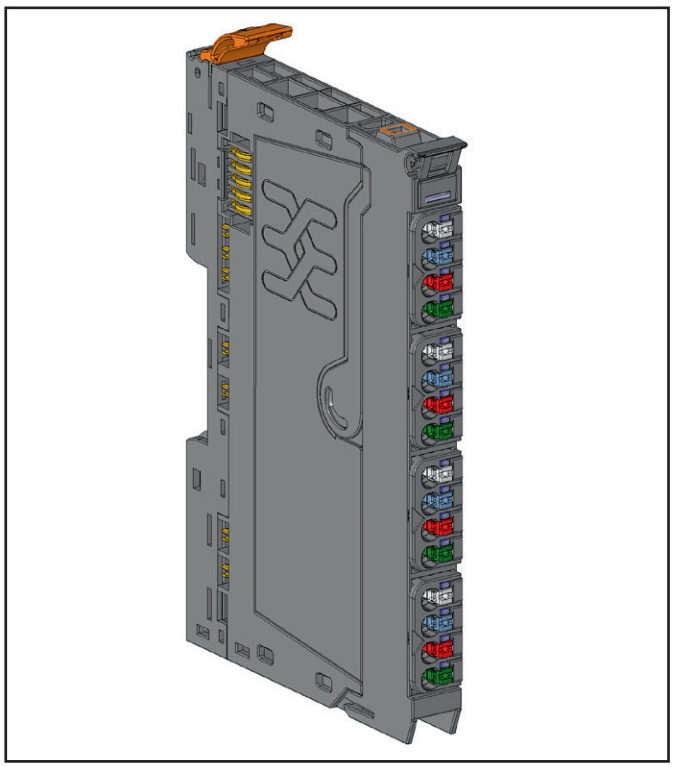

Digital input module UR20-4DI-P-TS (Item No. 1460150000)

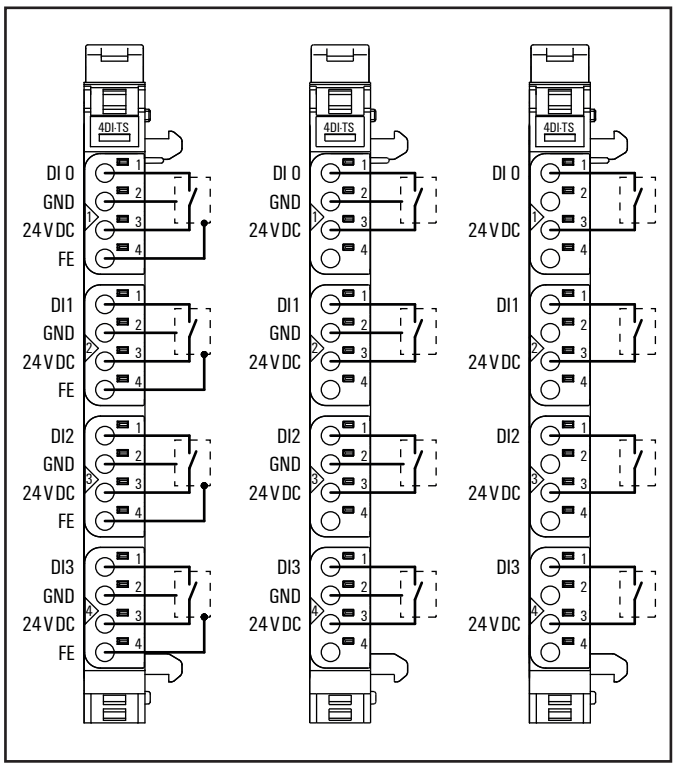

Connection diagram UR20-4DI-P-TS

The UR20-4DI-P-TS module with time stamp function is a special type of digital input module, e.g. for measuring time differences between signal edges. The module can detect up to four binary signals. One sensor can be connected to each connector using a 2-wire, 3-wire or 3-wire connection + FE. A status LED is assigned to each channel. The module electronics supply the connected sensors with power from the input current path (I_{IN}).

The process data of this module contain a ring buffer with either 5 or 15 entries, depending on parameter setup. A new entry in the ring buffer can be generated by an edge event which also can be parameterised. Each entry contains a time stamp with a resolution of 1 µs, the process image of the input channels at the respective point of time and a running number.

The process image in the latest entry of the ring buffer doesn't necessarily represent the current state of the physical inputs. To achieve this, both time stamps on rising and falling edges need to be activated for all channels.

For standard digital input applications, please use input modules without time stamp function.

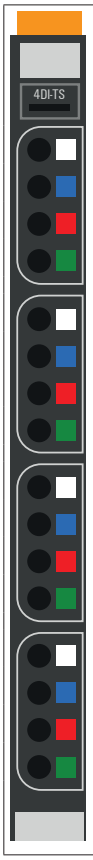

	Module status LED Green: Communication on system bus Red: No communication on system bus or there is a diagnostic message displayed
1.1	Yellow: Input 0 active
2.1	Yellow: Input 1 active
3.1	Yellow: Input 1 active
4.1	Yellow: Input 1 active

LED indicators UR20-4DI-P-TS, troubleshooting see Chapter 12

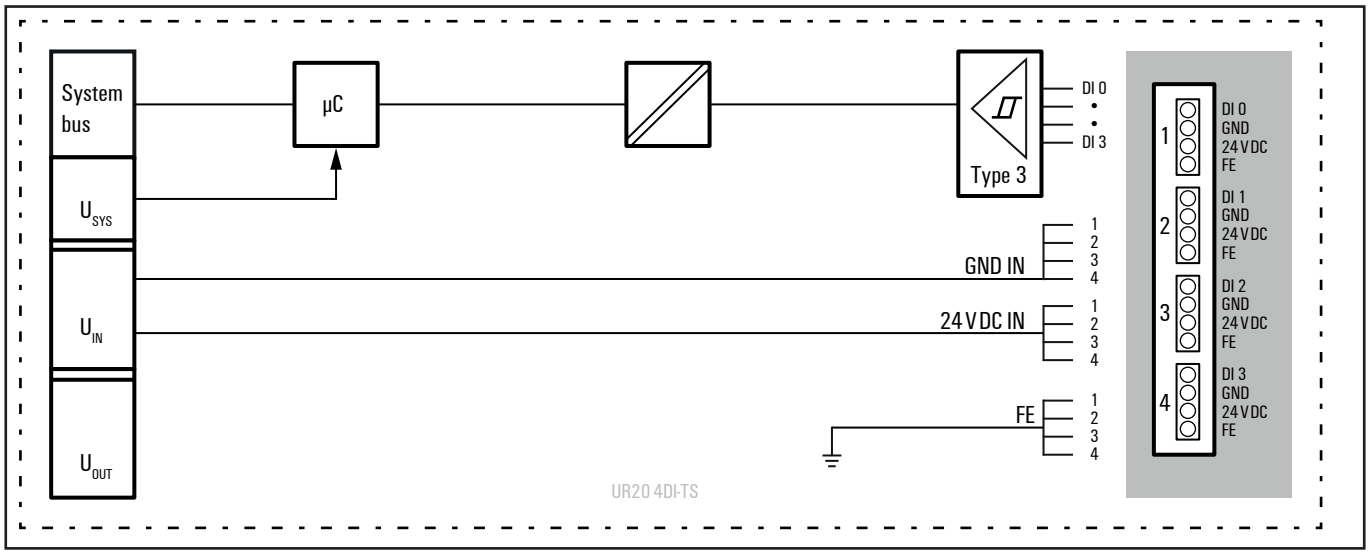

Block diagram UR20-4DI-P-TS

Technical data UR20-4DI-P-TS (Item No. 1460150000)

System data	
Data	Process, parameter and diagnostic data depend on the coupler used, see coupler description.
Interface	u-remote system bus
System bus transfer rate	48 Mbps
Inputs	
Number	4
Input type	P-switching, for Type 1 and Type 3 sensors as per IEC 61131-2
Input filter	Input delay adjustable from 0 to 40 ms
Low input voltage	< + 5 V referred to 0 V of the input power supply U_{IN}
High input voltage	> + 11 V referred to 0 V of the input power supply U_{IN}
Max. input current per channel	3 mA
Sensor supply	yes
Sensor connection	2-wire, 3-wire, 3-wire + FE
Reverse polarity protection	yes
Module diagnosis	yes
Individual channel diagnosis	no
Time stamp data width	16 bits
Time stamp resolution	1 µs
Supply	
Supply voltage	24 V DC +20 %/-15 %
Current consumption from system current path I_{SYS}	8 mA
Current consumption from input current path I_{IN}	10 mA + sensor supply current
General data	
Weight (operational status)	87 g
For additional general data, see Section 3.4	

Overview of the editable parameter UR20-4DI-P-TS

Channel	Description	Options[1)]	Default
	Process data size	20 Byte (0) / 60 Byte (1)	60 Byte
0 ... 3	Input delay	no (0) / 0,3 ms (1) / 3 ms (2) / 10 ms (3) / 20 ms (4) / 40 ms (5)	3 ms
0 ... 3	TimeStamp at edge 0-1	disabled (0) / enabled (1)	disabled
0 ... 3	TimeStamp at edge 1-0	disabled (0) / enabled (1)	disabled

1) Values in brackets for Modbus-TCP (firmware version 02.00.00 and higher), CANopen, EtherCAT and EtherNet/IP via module parameter class

Diagnostic data UR20-4DI-P-TS

Name	Bytes	Bit	Description	Default
Error indicator	0	0	Module error	
		1	Internal error	
		2	External error	
		3	Channel error	0
		4	Error	
		5	Reserved	0
		6	Reserved	0
		7	Parameter error	
Module types	1	0	Module Type	0x0F
		1		
		2		
		3		
		4	Reserved	0
		5	Reserved	0
		6	Reserved	0
		7	Reserved	0
Error byte 2	2	0 – 7	Reserved	0
Error byte 3	3	0 – 2	Reserved	0
		3	Internal diagnostic FIFO full	0
		4 – 7	Reserved	0
Channel type	4	0 – 6	Channel type	0x70
		7	Reserved	0
Diagnostic bits per channel	5		Number of diagnostic bit per channel	0
Number of channels	6		Number of similar channels per module	4
Channel error	7 – 10	0 – 31	Reserved	0
Channel 0 error to Channel 31 error	11 to 42	0 – 7	Reserved	0
Time stamp	43 – 46		Time stamp [µs] (32 bit)	

Process data[1] inputs UR20-4DI-P-TS

Byte	Format	Name	Remark
IB0	Byte	Input image 1	Bit0 = DI0 ... Bit3 = DI3, Bit4 ... 7 reserved
IB1	Byte	Running number 1	0 ... 127 rotating
IB2	Wort	Time stamp 1	0 ... 65535 µs rotating
IB3			
IB4	Byte	Input image 2	
IB5	Byte	Running number 2	
IB6	Wort	Time stamp 2	
IB7			
IB8	Byte	Input image 3	
IB9	Byte	Running number 3	
IB10	Wort	Time stamp 3	
IB11			
...	...	...	
IB56	Byte	Input image 15	
IB57	Byte	Running number 15	
IB58	Wort	Time stamp 15	
IB59			

1) Internal process data mapping with data format “Standard”. Depending on the fieldbus specification and the data format of the communicating fieldbus components the bytes and/or words can be reversed during data transfer.

Time stamp function

With time stamp function (ETS = edge time stamp) enabled, at every corresponding edge the time value of the timer is stored in the process image as an ETS entry together with the status of the inputs and a running number.

The module does not use any bytes in the output range. It uses 60 Bytes in the input range for 15 ETS entries each with 4 bytes.

Structure of an ETS entry

Input image PII After the edge transition, the status of the inputs is stored here. The input byte has the following bit assignments:
Bit 0: DI 0
Bit 1: DI 1
Bit 2: DI 2
Bit 3: DI 3
Bit 4 ... 7: reserved (0)

Running Number RN The RN (running number) is a consecutive number from 0 to 127. It describes the chronological sequence of the edges

Time stamp ETS_US The 16-bit timer (0 ... 65535µs) in the u-remote module is started as soon as the power supply is switched on and after (2^{16}-1) µs restarts at 0.

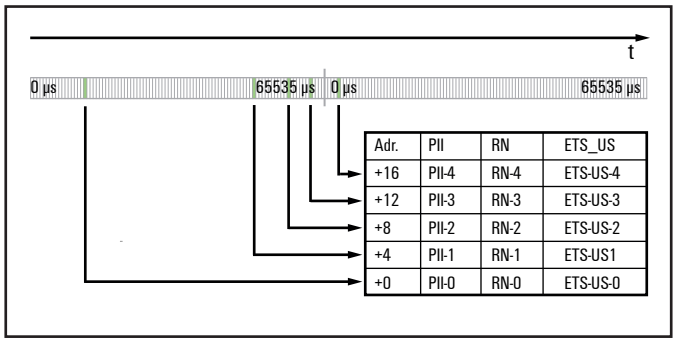

Structure of the ETS entries in the input range in chronological order.

Example for the mode of operation

The following example shows the sequence in which ETS entries are stored. The input channels are predefined as follows:

DI 0 and DI 1: time stamp at edge 0-1 enabled
DI 2 and DI 3: time stamp at edge 0-1 disabled
DI 0 and DI 1: time stamp at edge 1-0 enabled
DI 2 and DI 3: time stamp at edge 1-0 disabled

The ETS entries available at time "t" are designated by the green area in the diagram. ETS entries that are not (or no longer) available have a grey background

New ETS entries are always entered starting at address + 0 and already existing ETS entries are each shifted by 4 bytes.

Process image is empty at t_0

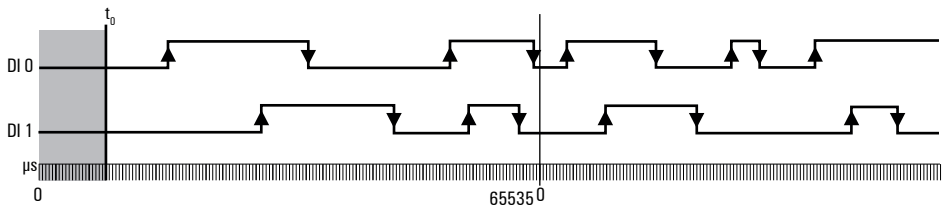

Address	PII	RN	ETS_US
+0			
+4			
+8			
+12			
+16			

1st ETS entry at t_1

A rising 0-1 edge on DI 0 causes the 1st ETS entry at address + 0.

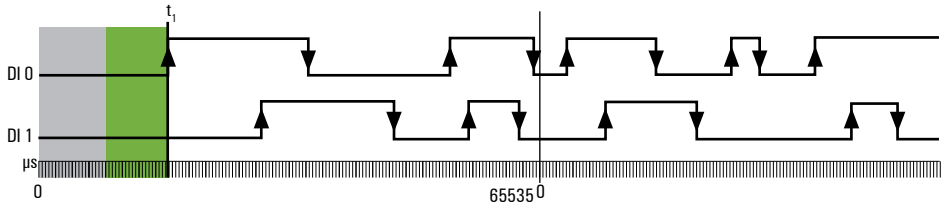

Address	PII	RN	ETS_US
+0	00000001	0	16875
+4			
+8			
+12			
+16			

2nd ETS entry at t_2

A rising 0-1 edge on DI 1 causes the 2nd ETS entry at address + 0. The 1st ETS entry is shifted by 4 bytes.

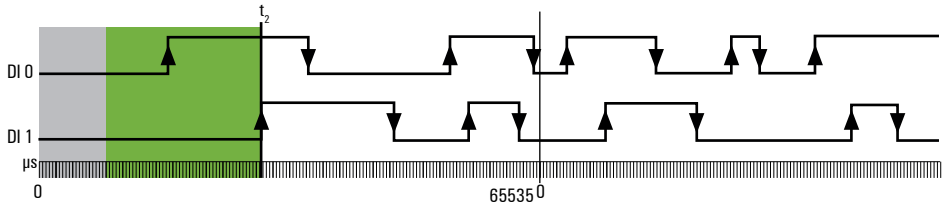

Address	PII	RN	ETS_US
+0	00000011	1	28344
+4	00000001	0	16875
+8			
+12			
+16			

3rd ETS entry at t_3

A falling 1-0 edge on DI 0 causes the 3rd ETS entry.

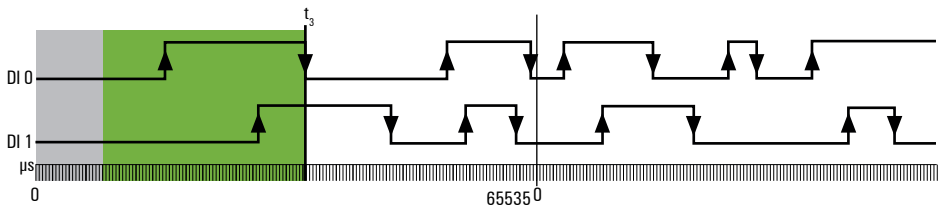

Address	PII	RN	ETS_US
+0	00000010	2	43194
+4	00000011	1	28344
+8	00000001	0	16875
+12			
+16			

4th to14th ETS entry ...

15. ETS entry at t_{15}

A rising 0-1 edge on DI 0 causes the15th ETS entry.

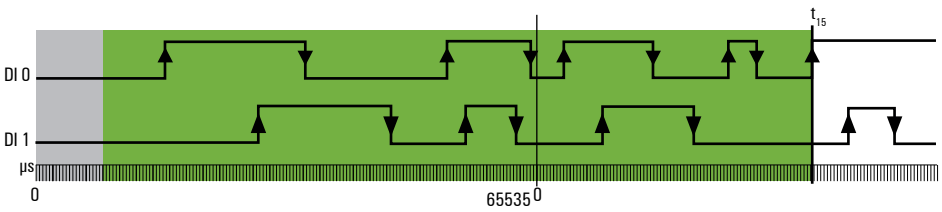

Address	PII	RN	ETS_US
+0	00000001	14	35717
+4	00000000	13	28344
+8	00000001	12	24576
+12	00000000	11	19988
+16	00000010	10	14745
+20	00000011	9	8192
+24	00000001	8	3277
+28	00000000	7	63896
+32	00000001	6	62422
+36	00000011	5	55869
+40	00000001	4	53247
+44	00000000	3	45875
+48	00000010	2	43194
+52	00000011	1	28344
+56	00000001	0	16875

16th ETS entry at t_{16}

A rising 0-1 edge on DI 1 causes the16th ETS entry. The 1st ETS entry is deleted and not available anymore.

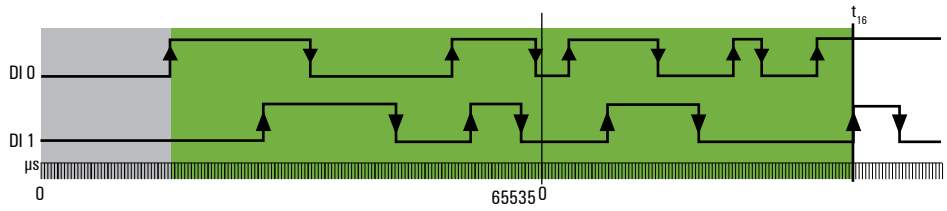

Address	PII	RN	ETS_US
+0	00000011	15	37683
+4	00000001	14	35717
+8	00000000	13	28344
+12	00000001	12	24576
+16	00000000	11	19988
+20	00000010	10	14745
+24	00000011	9	8192
+28	00000001	8	3277
+32	00000000	7	63896
+36	00000001	6	62422
+40	00000011	5	55869
+44	00000001	4	53247
+48	00000000	3	45875
+52	00000010	2	43194
+56	00000011	1	28344
	00000001	0	16875

17. ETS entry at t_{17}

A falling 1-0 edge on DI 1 causes the17th ETS entry. The 2nd ETS entry is deleted and not available anymore.

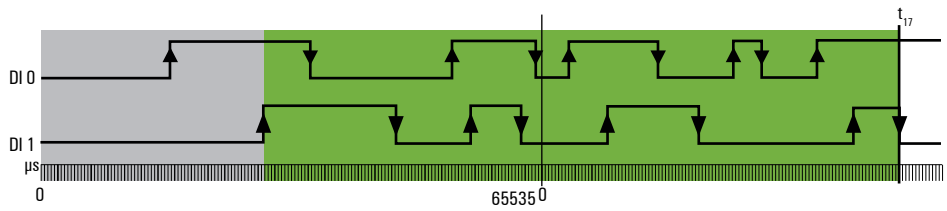

Address	PII	RN	ETS_US
+0	00000001	16	44236
+4	00000011	15	37683
+8	00000001	14	35717
+12	00000000	13	28344
+16	00000001	12	24576
+20	00000000	11	19988
+24	00000010	10	14745
+28	00000011	9	8192
+32	00000001	8	3277
+36	00000000	7	63896
+40	00000001	6	62422
+44	00000011	5	55869
+48	00000001	4	53247
+52	00000000	3	45875
+56	00000010	2	43194
	00000011	1	28344
	00000001	0	16875

6.10 Digital input module UR20-4DI-N

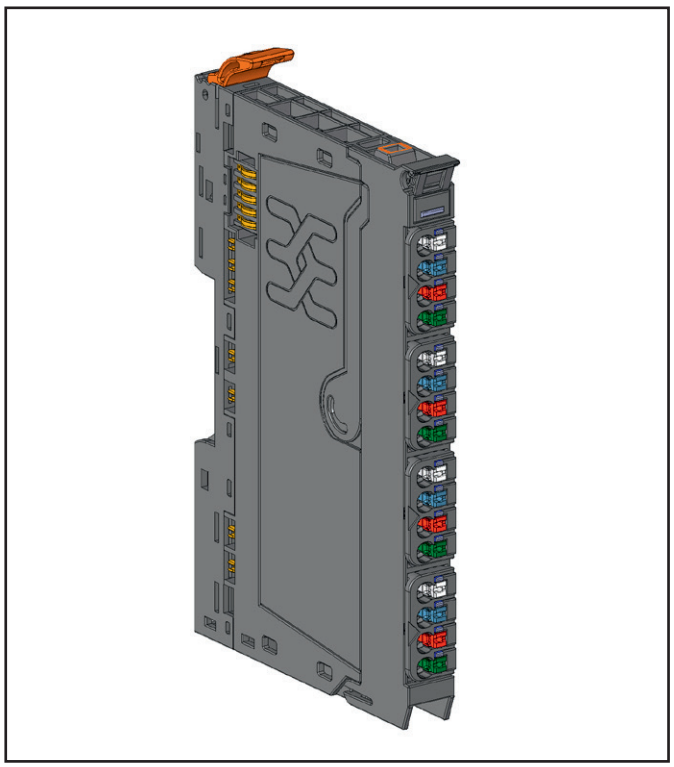

Digital input module UR20-4DI-N (Item No. 1315350000)

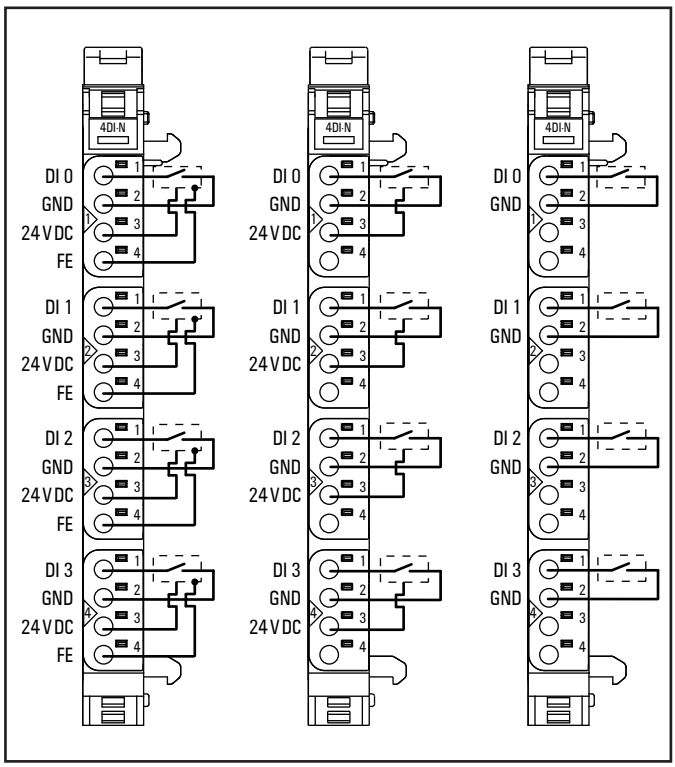

Connection diagram UR20-4DI-N

The digital input module UR20-4DI-N can detect up to 4 binary control signals. One sensor can be connected to each connector using a 2-wire, 3-wire or 3-wire + FE connection. The inputs are N-switching (sinking). A status LED is assigned to each channel. The module electronics supply the connected sensors with power from the input current path (I_{IN}).

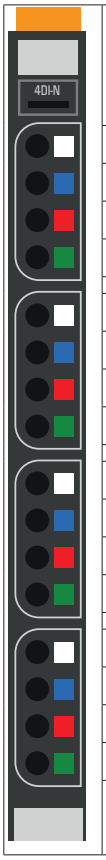

	Module status LED Green: Communication over the system bus Red: Error
1.1	Yellow: Input 0 active
2.1	Yellow: Input 1 active
3.1	Yellow: Input 2 active
4.1	Yellow: Input 3 active

LED indicators UR20-4DI-N, troubleshooting see Chapter 12

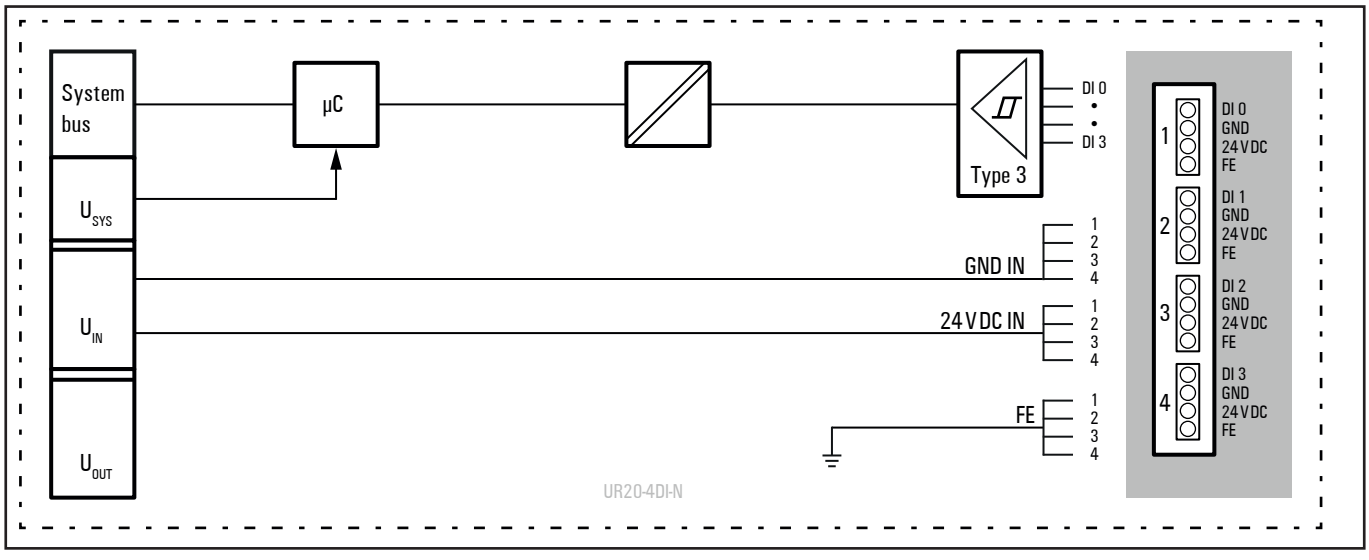

Block diagram UR20-4DI-N

Technical data UR20-4DI-N (Item No. 1315350000)

System data	
Data	Process, parameter and diagnostic data depend on the coupler used, see coupler description.
Interface	u-remote system bus
System bus transfer rate	48 Mbps
Inputs	
Number	4
Input type	N-switching, comparable to Type 1 and Type 3 sensors as per IEC 61131-2
Input filter	Input delay adjustable from 0 to 40 ms
Low input voltage	> -5 V referred to +24 V of the input power supply U_{IN}
High input voltage	< -11 V referred to +24 V of the input power supply U_{IN}
Sensor supply	max. 2 A per plug, total max. 8 A
Sensor connection	2-wire, 3-wire, 3-wire + FE
Reverse polarity protection	yes
Module diagnosis	yes
Individual channel diagnosis	no
Supply	
Supply voltage	24 V DC +20 %/-15 %
Current consumption from system current path I_{SYS}	8 mA
Current consumption from input current path I_{IN}	< 10 mA + sensor supply current
General data	
Weight (operational status)	87 g
For additional general data, see Section 3.4	

Overview of the editable parameter UR20-4DI-N

Channel	Description	Options[1)]	Default
0 ... 3	Input delay	no (0) / 0.3 ms (1) / 3 ms (2) / 10 ms (3) / 20 ms (4) / 40 ms (5)	3 ms

1) Values in brackets for Modbus-TCP (firmware version 02.00.00 and higher), CANopen, EtherCAT and EtherNet/IP via module parameter class

Diagnostic data UR20-4DI-N

Name	Bytes	Bit	Description	Default
Error indicator	0	0	Module error	
		1	Internal error	
		2	External error	
		3	Channel error	0
		4	Error	
		5	Reserved	0
		6	Reserved	0
		7	Parameter error	
Module type	1	0	Module Type	0x0F
		1		
		2		
		3		
		4	Reserved	0
		5	Reserved	0
		6	Reserved	0
		7	Reserved	0
Error byte 2	2	0 - 7	Reserved	0
Error byte 3	3	0 - 2	Reserved	0
		3	Internal diagnostic FIFO full	0
		4 ... 7	Reserved	0
Channel type	4	0 - 6	Channel type	0x70
		7	Reserved	0
Diagnostic bits per channel	5		Number of diagnostic bit per channel	0
Number of channels	6		Number of similar channels per module	4
Channel error	7 - 10	0 - 31	Reserved	0
Channel 0 error to Channel 31 error	11 to 42	0 - 7	Reserved	0
Time stamp	43 - 46		Time stamp [µs] (32 bit)	

Process data inputs UR20-4DI-N

Byte	Bit	Description
IB0	IX0.0	DI0
	IX0.1	DI1
	IX0.2	DI2
	IX0.3	DI3
	IX0.4	Reserved
	IX0.5	Reserved
	IX0.6	Reserved
	IX0.7	Reserved

6.11 Digital input module UR20-8DI-N-3W

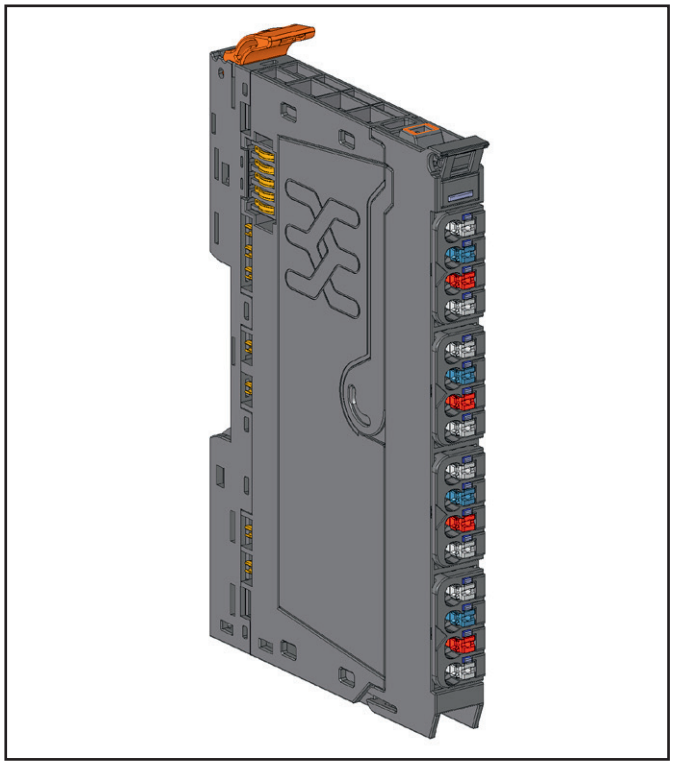

Digital input module UR20-8DI-N-3W (Item No. 1315370000)

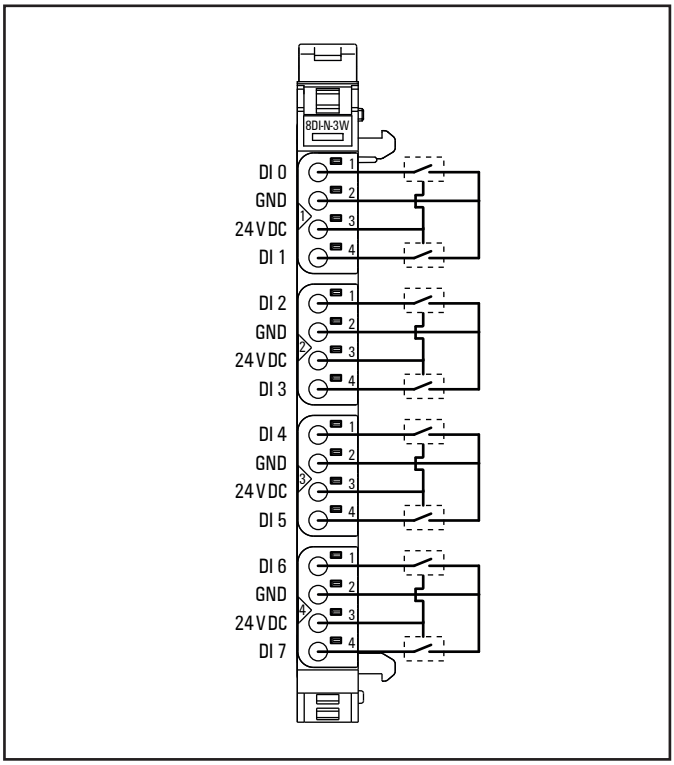

Connection diagram UR20-8DI-N-3W

The digital input module UR20-8DI-N-3W can detect up to 8 binary control signals. Two sensors can be connected to each connector using a 2-wire or 3-wire connection. The inputs are N-switching (sinking). A status LED is assigned to each channel. The module electronics supply the connected sensors with power from the input current path (I_{IIN}).

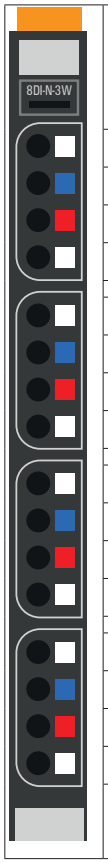

	Module status LED Green: Communication over the system bus Red: Error
1.1	Yellow: Input 0 active
1.4	Yellow: Input 1 active
2.1	Yellow: Input 2 active
2.4	Yellow: Input 3 active
3.1	Yellow: Input 4 active
3.4	Yellow: Input 5 active
4.1	Yellow: Input 6 active
4.4	Yellow: Input 7 active

LED indicators UR20-8DI-N-3W, troubleshooting see Chapter 12

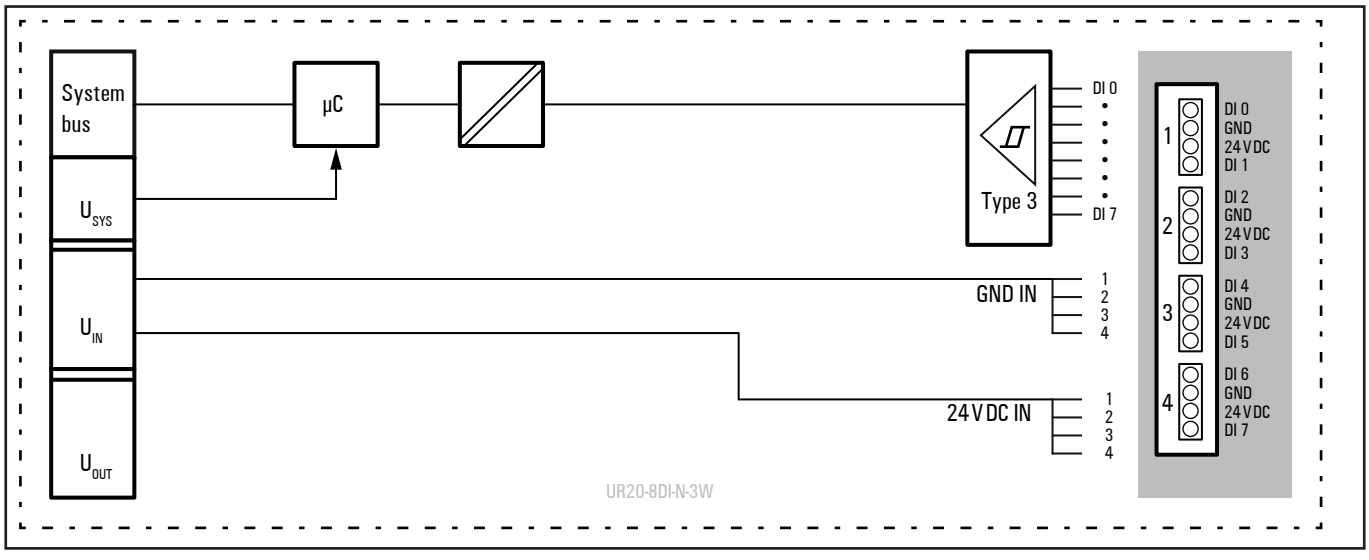

Block diagram UR20-8DI-N-3W

Technical data UR20-8DI-N-3W (Item No. 1315370000)

System data	
Data	Process, parameter and diagnostic data depend on the coupler used, see coupler description.
Interface	u-remote system bus
System bus transfer rate	48 Mbps
Inputs	
Number	8
Input type	N-switching, comparable to Type 1 and Type 3 sensors as per IEC 61131-2
Input filter	Input delay adjustable from 0 to 40 ms
Low input voltage	> -5 V referred to +24 V of the input power supply U_{IN}
High input voltage	< -11 V referred to +24 V of the input power supply U_{IN}
Sensor supply	max. 2 A per plug, total max. 8 A
Sensor connection	2-wire, 3-wire
Reverse polarity protection	yes
Module diagnosis	yes
Individual channel diagnosis	no
Supply	
Supply voltage	24 V DC +20 %/-15 %
Current consumption from system current path I_{SYS}	8 mA
Current consumption from input current path I_{IN}	< 20 mA + sensor supply current
General data	
Weight (operational status)	83 g
For additional general data, see Section 3.4	

Overview of the editable parameters UR20-8DI-N-3W

Channel	Description	Options[1)]	Default
0 ... 7	Input delay	no (0) / 0.3 ms (1) / 3 ms (2) / 10 ms (3) / 20 ms (4) / 40 ms (5)	3 ms

1) Values in brackets for Modbus-TCP (firmware version 02.00.00 and higher), CANopen, EtherCAT and EtherNet/IP via module parameter class

Diagnostic data UR20-8DI-N-3W

Name	Bytes	Bit	Description	Default
Error indicator	0	0	Module error	
		1	Internal error	
		2	External error	
		3	Channel error	0
		4	Error	
		5	Reserved	0
		6	Reserved	0
		7	Parameter error	
Module types	1	0	Module Type	0x0F
		1		
		2		
		3		
		4	Reserved	0
		5	Reserved	0
		6	Reserved	0
		7	Reserved	0
Error byte 2	2	0 - 7	Reserved	0
Error byte 3	3	0 - 2	Reserved	0
		3	Internal diagnostic FIFO full	0
		4 ... 7	Reserved	0
Channel type	4	0 - 6	Channel type	0x70
		7	Reserved	0
Diagnostic bits per channel	5		Number of diagnostic bit per channel	0
Number of channels	6		Number of similar channels per module	8
Channel error	7 - 10	0 - 31	Reserved	0
Channel 0 error to Channel 31 error	11 to 42	0 - 7	Reserved	0
Time stamp	43 - 46		Time stamp [µs] (32 bit)	

Process data inputs UR20-8DI-N-3W

Byte	Bit	Description
IB0	IX0.0	DI0
	IX0.1	DI1
	IX0.2	DI2
	IX0.3	DI3
	IX0.4	DI4
	IX0.5	DI5
	IX0.6	DI6
	IX0.7	DI7

6.12 Digital input module UR20-16DI-N

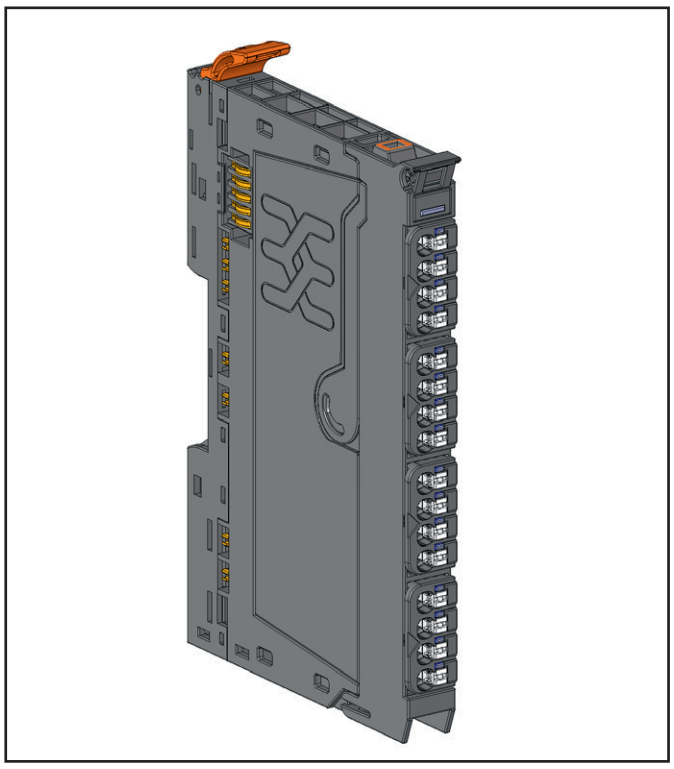

Digital input module UR20-16DI-N (Item No. 1315390000)

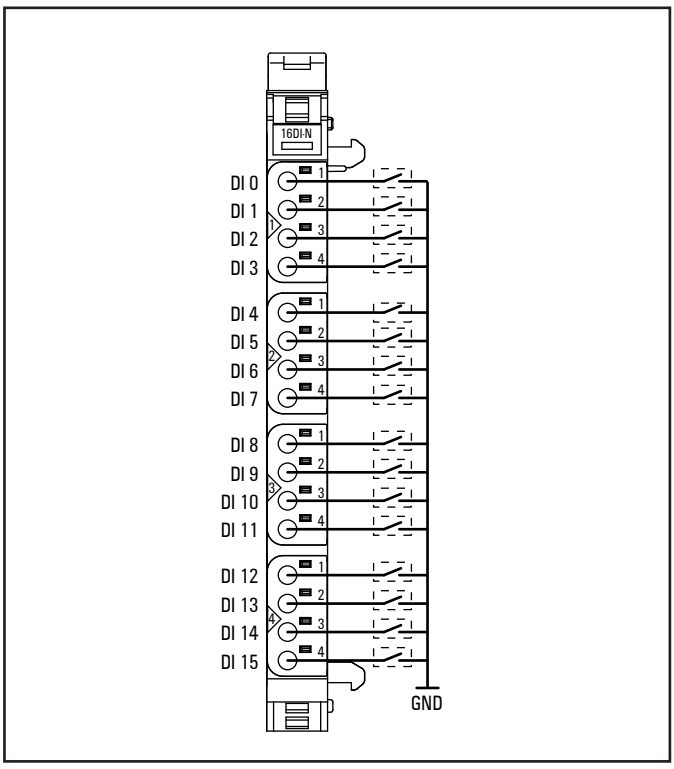

Connection diagram UR20-16DI-N

The UR20-16DI-N digital input module can detect up to 16 binary control signals. Four sensors can be connected to each connector in a 1-wire connection. The inputs are N-switching (sinking). A status LED is assigned to each channel. The connected sensors must be supplied with power from the input curent path I_{IN} (e.g. with potential distribution modules).

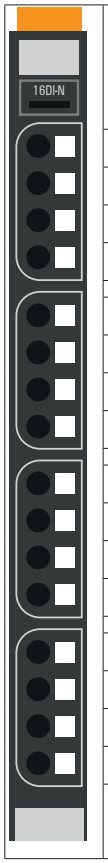

	Module status LED Green: Communication over the system bus Red: Error
1.1	Yellow: Input 0 active
1.2	Yellow: Input 1 active
1.3	Yellow: Input 2 active
1.4	Yellow: Input 3 active
2.1	Yellow: Input 4 active
2.2	Yellow: Input 5 active
2.3	Yellow: Input 6 active
2.3	Yellow: Input 7 active
3.1	Yellow: Input 8 active
3.2	Yellow: Input 9 active
3.3	Yellow: Input 10 active
3.4	Yellow: Input 11 active
4.1	Yellow: Input 12 active
4.2	Yellow: Input 13 active
4.3	Yellow: Input 14 active
4.4	Yellow: Input 15 active

LED indicators UR20-16DI-N, troubleshooting see Chapter 12

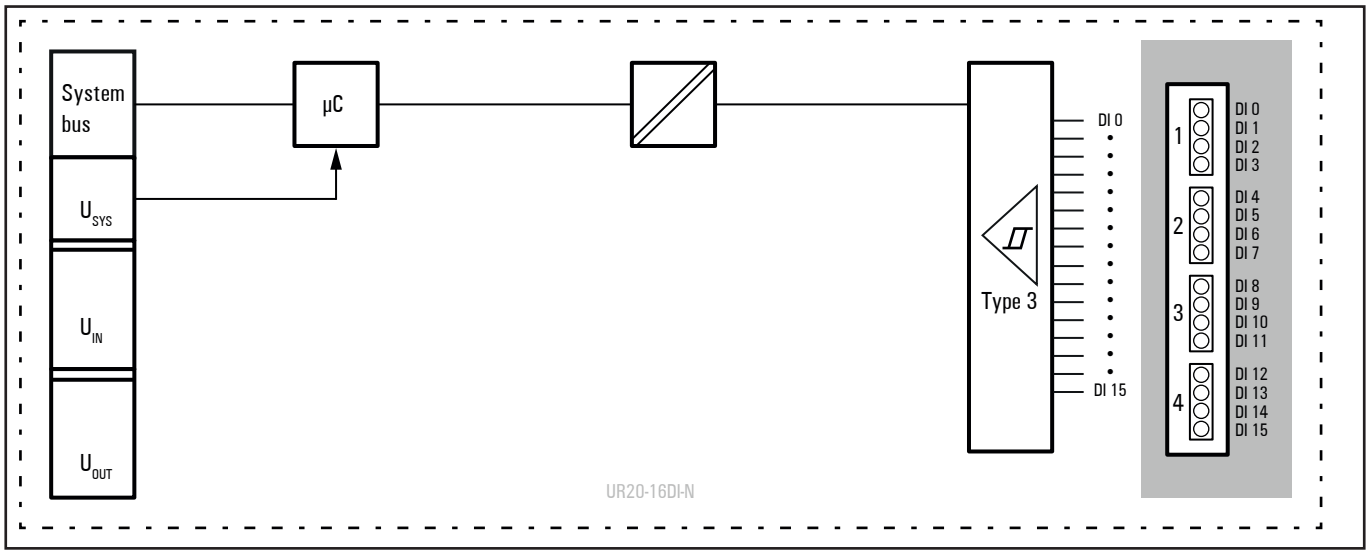

Block diagram UR20-16DI-N

Technical data UR20-16DI-N (Item No. 1315390000)

System data	
Data	Process and diagnostic data depend on the coupler used, see coupler description.
Interface	u-remote system bus
System bus transfer rate	48 Mbps
Inputs	
Number	16
Input type	N-switching, comparable to Type 1 and Type 3 sensors as per IEC 61131-2
Input filter	Input delay 3 ms
Low input voltage	> -5 V referred to +24 V of the input power supply U_{IN}
High input voltage	< -11 V referred to +24 V of the input power supply U_{IN}
Sensor supply	no
Sensor connection	1-wire
Reverse polarity protection	yes
Module diagnosis	yes
Individual channel diagnosis	no
Supply	
Supply voltage	24 V DC +20 %/-15 %
Current consumption from system current path I_{SYS}	8 mA
Current consumption from input current path I_{IN}	< 15 mA
General data	
Weight (operational status)	88 g
For additional general data, see Section 3.4	

Diagnostic data UR20-16DI-N

Name	Bytes	Bit	Description	Default
Error indicator	0	0	Module error	
		1	Internal error	
		2	External error	
		3	Channel error	0
		4	Error	
		5	Reserved	0
		6	Reserved	0
		7	Parameter error	
Module type	1	0	Module Type	0x0F
		1		
		2		
		3		
		4	Reserved	0
		5	Reserved	0
		6	Reserved	0
		7	Reserved	0
Error byte 2	2	0 ... 7	Reserved	0
Error byte 3	3	0 ... 2	Reserved	0
		3	Internal diagnostic FIFO full	0
		4 ... 7	Reserved	0
Channel type	4	0 ... 6	Channel type	0x70
		7	Reserved	0
Diagnostic bits per channel	5		Number of diagnostic bit per channel	0
Number of channels	6		Number of similar channels per module	0
Channel error	7 ... 10	0 ... 31	Reserved	0
Channel 0 error to Channel 31 error	11 to 42	0 ... 7	Reserved	0
Time stamp	43 ... 46		Time stamp [µs] (32 bit)	

Process data[1] inputs UR20-16DI-N

Byte	Bit	Description
IB0	IX0.0	DI0
	IX0.1	DI1
	IX0.2	DI2
	IX0.3	DI3
	IX0.4	DI4
	IX0.5	DI5
	IX0.6	DI6
	IX0.7	DI7
IB1	IX1.0	DI8
	IX1.1	DI9
	IX1.2	DI10
	IX1.3	DI11
	IX1.4	DI12
	IX1.5	DI13
	IX1.6	DI14
	IX1.7	DI15

1) Internal process data mapping with data format “Standard”. Depending on the fieldbus specification and the data format of the communicating fieldbus components the bytes and/or words can be reversed during data transfer.

6.13 Digital input module UR20-16DI-N-PLC-INT

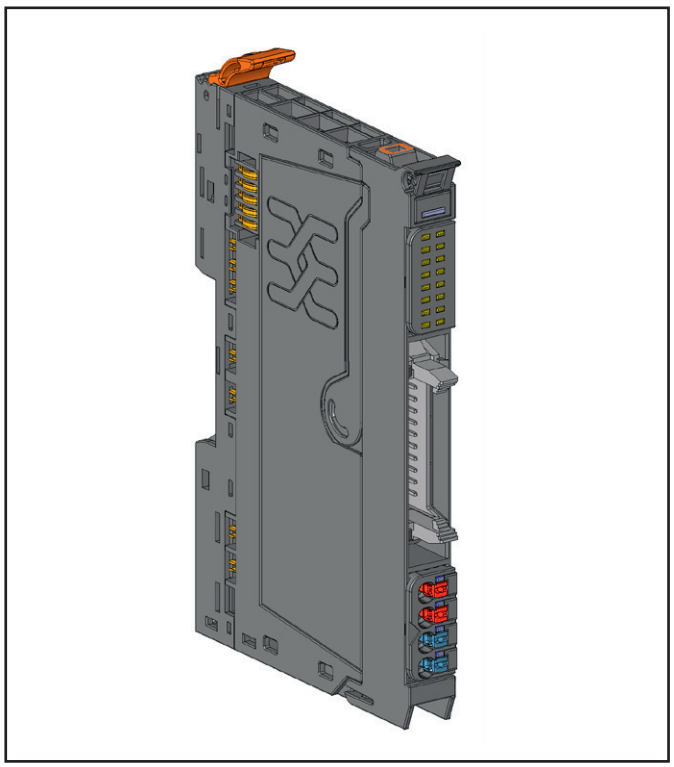

Digital input module UR20-16DI-N-PLC-INT (Item No. 1315400000)

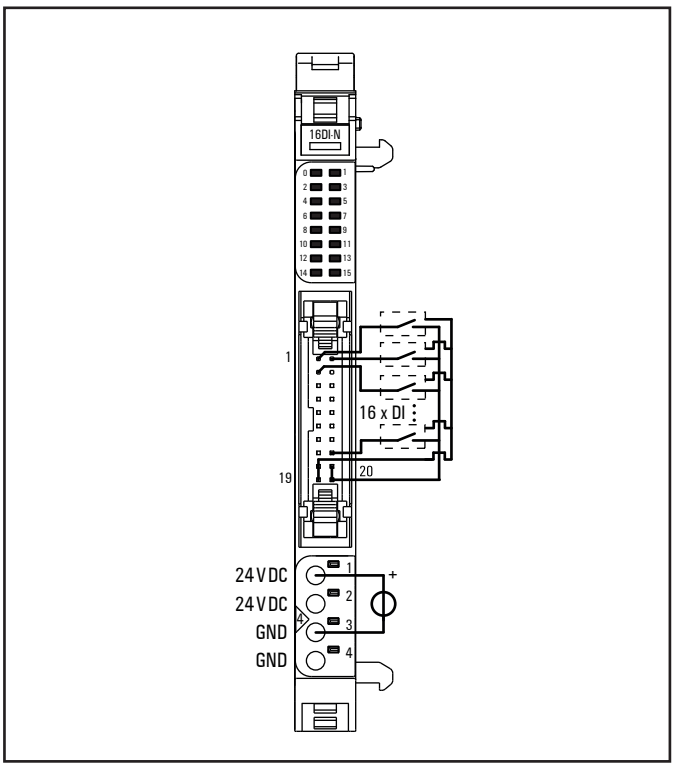

Connection diagram UR20-16DI-N-PLC-INT

The UR20-16DI-N-PLC-INT digital input module can detect up to 16 binary control signals. The sensors are connected via a 20-pole PLC connection. The inputs are N-switching (sinking). A status LED is assigned to each channel in a separate block.

The module as well as the sensors are supplied by one of both plugs. Each contact of the PLC plug can be loaded with 1 A at maximum. In case the module is supplied via the 4-pole feed-in plug, the current drain via the PLC plug using its four contacts is limited to 2 A at maximum. An appropriate fuse has to be provided.

The power supply of the peripherals connected has to be calculated for each individual installation situation. When using a flat ribbon cable, please regard its higher internal resistance!

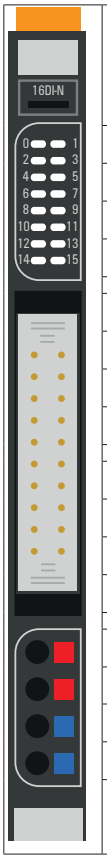

	Module status LED Green: Communication over the system bus Red: Error
0	Yellow: Input 0 active
1	Yellow: Input 1 active
...	...
15	Yellow: Input 15 active
4.1	Green: Supply voltage feed-in plug > 18 V DC
4.2	Red: Error on the supply voltage of the feed-in plug

LED indicators UR20-16DI-N-PLC-INT, troubleshooting see Chapter 12

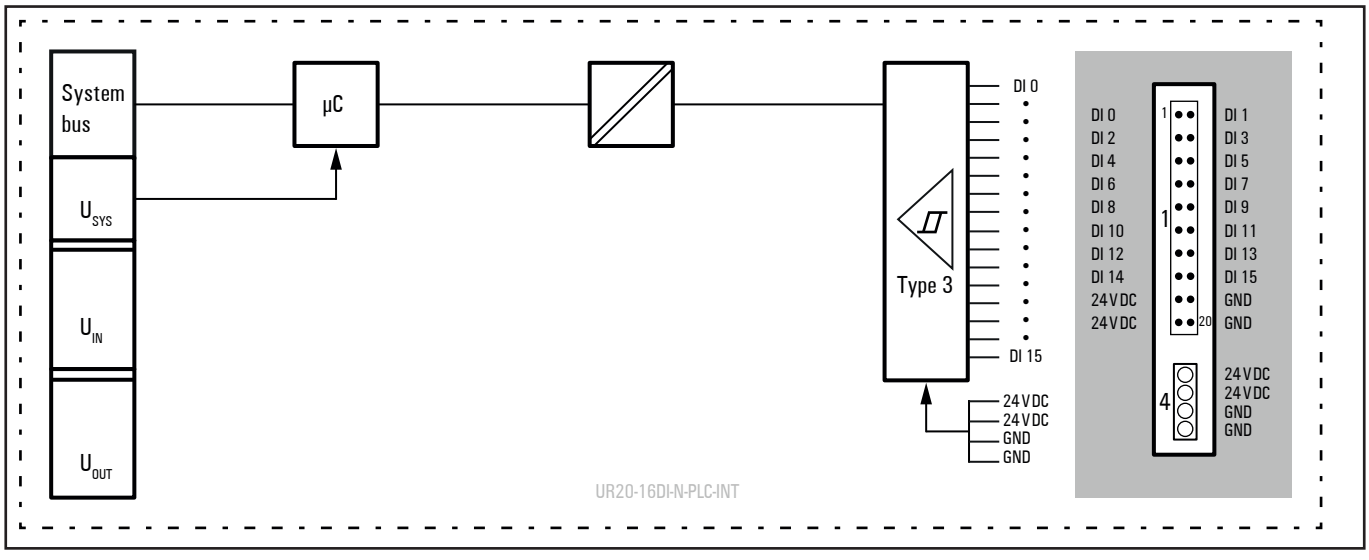

Block diagram UR20-16DI-N-PLC-INT

Technical data UR20-16DI-N-PLC-INT (Item No. 1315400000)

System data	
Data	Process and diagnostic data depend on the coupler used, see coupler description.
Interface	u-remote system bus
System bus transfer rate	48 Mbps
Inputs	
Number	16
Input type	N-switching, comparable to Type 1 and Type 3 sensors as per IEC 61131-2
Input filter	Input delay 3 ms
Low input voltage	> -5 V referred to +24 V of the input power supply U_{IN}
High input voltage	< -11 V referred to +24 V of the input power supply U_{IN}
Sensor supply	External
Sensor connection	PLC interface unit
Reverse polarity protection	yes
Module diagnosis	yes
Individual channel diagnosis	no
Supply	
Supply voltage	24 V DC +20 %/-15 %
Current consumption from system current path I_{SYS}	8 mA
Current consumption	< 15 mA, power supply via feed-in plug or PLC connection
General data	
Weight (operational status)	82 g
For additional general data, see Section 3.4	

Diagnostic data UR20-16DI-N-PLC-INT

Name	Bytes	Bit	Description	Default
Error indicator	0	0	Module error	
		1	Internal error	
		2	External error	
		3	Channel error	0
		4	Error	
		5	Reserved	0
		6	Reserved	0
		7	Parameter error	
Module type	1	0	Module Type	0x0F
		1		
		2		
		3		
		4	Reserved	0
		5	Reserved	0
		6	Reserved	0
		7	Reserved	0
Error byte 2	2	0 ... 7	Reserved	0
Error byte 3	3	0 ... 2	Reserved	0
		3	Internal diagnostic FIFO full	0
		4 ... 7	Reserved	0
Channel type	4	0 ... 6	Channel type	0x70
		7	Reserved	0
Diagnostic bits per channel	5		Number of diagnostic bit per channel	0
Number of channels	6		Number of similar channels per module	0
Channel error	7 ... 10	0 ... 31	Reserved	0
Channel 0 error to Channel 31 error	11 to 42	0 ... 7	Reserved	0
Time stamp	43 ... 46		Time stamp [µs] (32 bit)	

Process data[1] inputs UR20-16DI-N-PLC-INT

Byte	Bit	Description
IB0	IX0.0	DI0
	IX0.1	DI1
	IX0.2	DI2
	IX0.3	DI3
	IX0.4	DI4
	IX0.5	DI5
	IX0.6	DI6
	IX0.7	DI7
IB1	IX1.0	DI8
	IX1.1	DI9
	IX1.2	DI10
	IX1.3	DI11
	IX1.4	DI12
	IX1.5	DI13
	IX1.6	DI14
	IX1.7	DI15

1) Internal process data mapping with data format “Standard”. Depending on the fieldbus specification and the data format of the communicating fieldbus components the bytes and/or words can be reversed during data transfer.

6.14 Digital input module UR20-4DI-2W-230V-AC

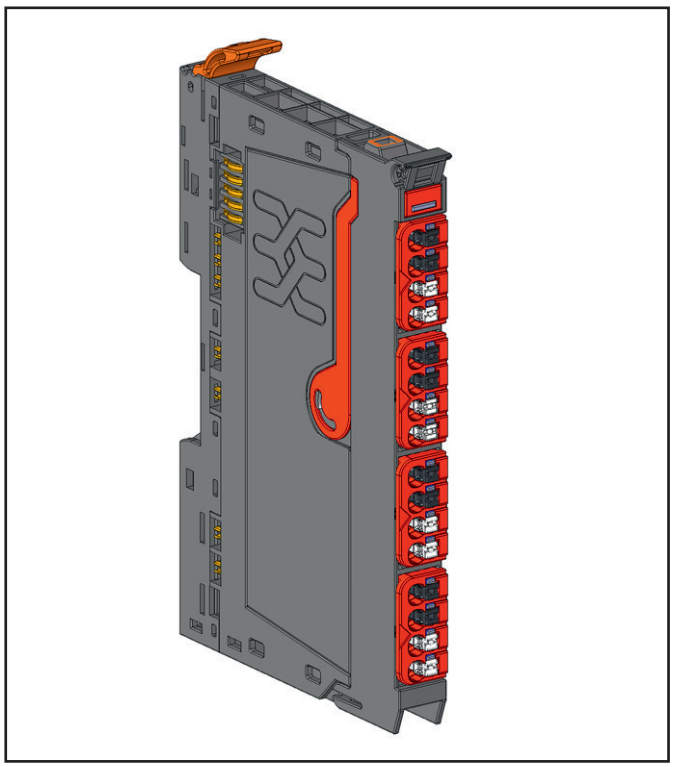

Digital input module UR20-4DI-2W-230V-AC (Order-No. 1550070000)

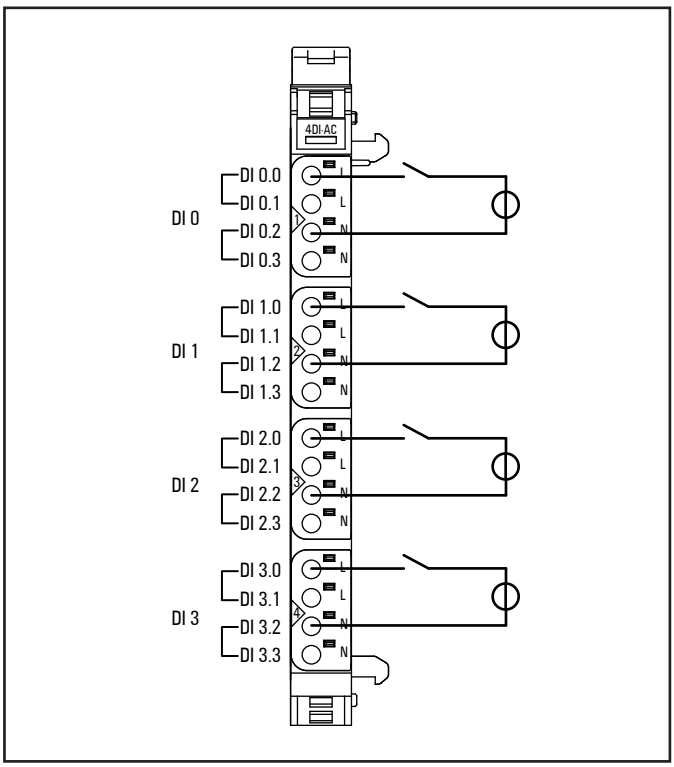

Connection diagram UR20-4DI-2W-230V-AC

The digital input module UR20-4DI-2W-230V-AC can detect up to 4 binary control signals. One sensor can be connected to each connector using a 2-wire connection. Both L and N connections of each input are bridged internally. The four inputs are galvanic isolated, they can be supplied with input voltages between 110 V AC and 230 V AC. Solely AC measurements can be run.
A status LED is assigned to each channel.

⚠ WARNING

Possible danger to life!
All signal lines must be supplied from the same power system.

ATTENTION

The module can be destroyed by too high frequencies.
The input frequency may be 65 Hz at maximum, the switching frequency 15 Hz at maximum.

ATTENTION

The module can be destroyed by too high input currents of the sinal lines.
The inputs must be ensured using a slow fuse max. 4 A.

ATTENTION

When using input modules UR20-4DI-2W-230V-AC in explosive atmosphere:

- The device shall be installed in an environment free of condensation, corrosives and conducting dusts.
- If the switching or input voltage exceeds 63 V, a transient protection device shall be provided that limits the transients to a peak voltage of 500 V or less.

ATTENTION

The module can be destroyed by a hot swap.

► Make sure that the input contacts are voltage-free before carrying out a hot swap of the electronic unit.



	Module status LED Green: Communication over the system bus Red: Error
1.1	Yellow: Input 0 active
2.1	Yellow: Input 1 active
3.1	Yellow: Input 2 active
4.1	Yellow: Input 3 active

LED indicators UR20-4DI-2W-230V-AC, troubleshooting see Chapter 12

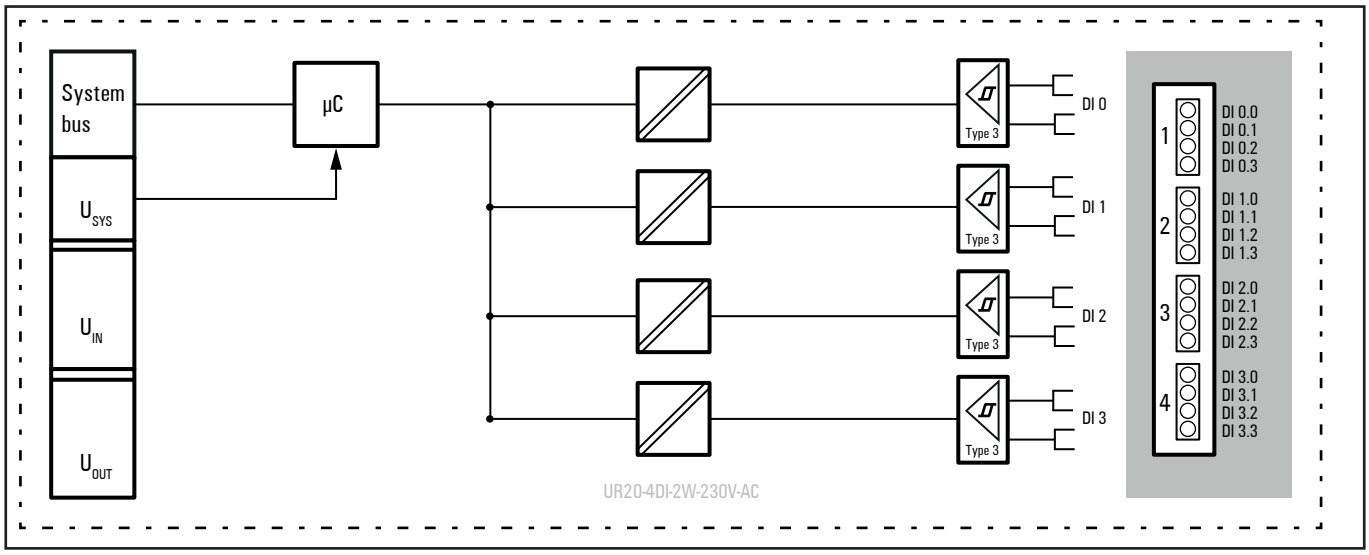

Block diagram UR20-4DI-2W-230V-AC

Technical data UR20-4DI-2W-230V-AC (Order-No. 1550070000)

System data	
Data	Process, parameter and diagnostic data depend on the coupler used, see coupler description.
Interface	u-remote system bus
System bus transfer rate	48 Mbps
Galvanic isolation	4 kV between channels and power supply
Line-to-line voltage	400 V between the channels possible
Inputs	
Number	4
Input type	P-switching, for Type 1 sensors (110 V AC), Type 1 and Type 3 sensors (230 V, 50 Hz), Type 2 sensors (230 V, 60 Hz) as per IEC 61131-2
Input filter	Input delay 10 ms
Low input voltage	< 65 V
High input voltage	≥ 80 V
Input voltage max.	277 V AC (UL); 265 V AC (VDE)
Input frequency, typ.	50 Hz, 60 Hz
Sensor supply	no
Sensor connection	2-wire
Module diagnosis	yes
Individual channel diagnosis	no
Supply	
Supply voltage	24 V DC +20 %/-15 %
Current consumption from system current path I_{SYS}	8 mA
Current consumption from input current path I_{IN}	no
General data	
Weight (operational status)	89 g
For additional general data, see Section 3.4	

Diagnostic data UR20-4DI-2W-230V-AC

Name	Byte	Bit	Description	Default
Error indicator	0	0	Module error	
		1	Internal error	
		2	External error	
		3	Channel error	0
		4	Error	
		5	Reserved	0
		6	Reserved	0
		7	Parameter error	
Module type	1	0	Module Type	0x05
		1		
		2		
		3		
		4	Reserved	0
		5	Reserved	0
		6	Reserved	0
		7	Reserved	0
Error byte 2	2	0 ... 7	Reserved	0
Error byte 3	3	0 ... 2	Reserved	0
		3	Internal diagnostic FIFO full	0
		4	Power supply fault	0
		5 ... 7	Reserved	0
Channel type	4	0 ... 6	Channel type	0x70
		7	Reserved	0
Diagnostic bits per channel	5		Number of diagnostic bit per channel	0
Number of channels	6		Number of similar channels per module	4
Channel error	7 ... 10	0 ... 31	Reserved	0
Channel 0 error to Channel 31 error	11 ... 42	0 ... 7	Reserved	0
Time stamp	43-46		time stamp [µs] (32bit)	

Process data inputs UR20-4DI-2W-230V-AC

Byte	Bit	Description
IB0	IX0.0	DI0
	IX0.1	DI1
	IX0.2	DI2
	IX0.3	DI3
	IX0.4	Reserved
	IX0.5	Reserved
	IX0.6	Reserved
	IX0.7	Reserved

6.15 Digital input module UR20-8DI-ISO-2W

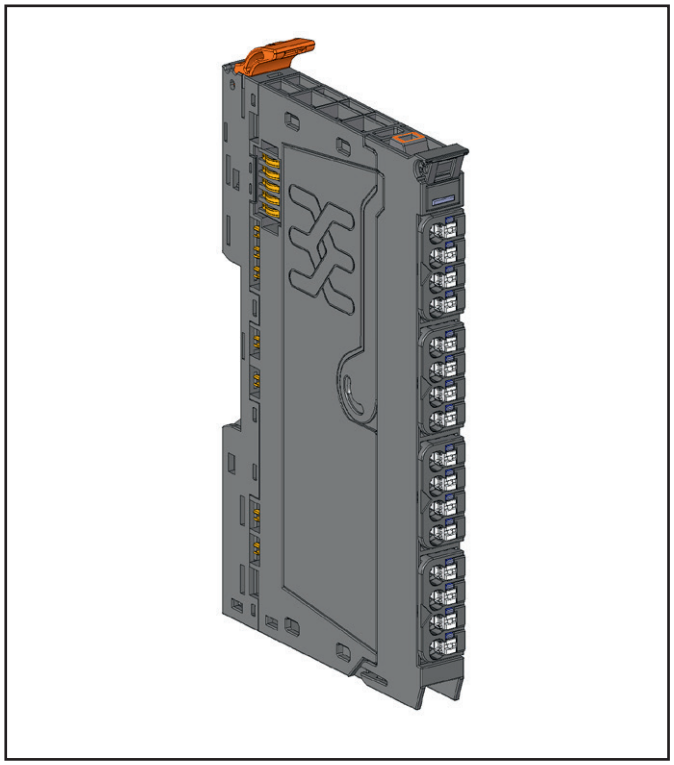

Digital input module UR20-8DI-ISO-2W (Item No. 2457240000)

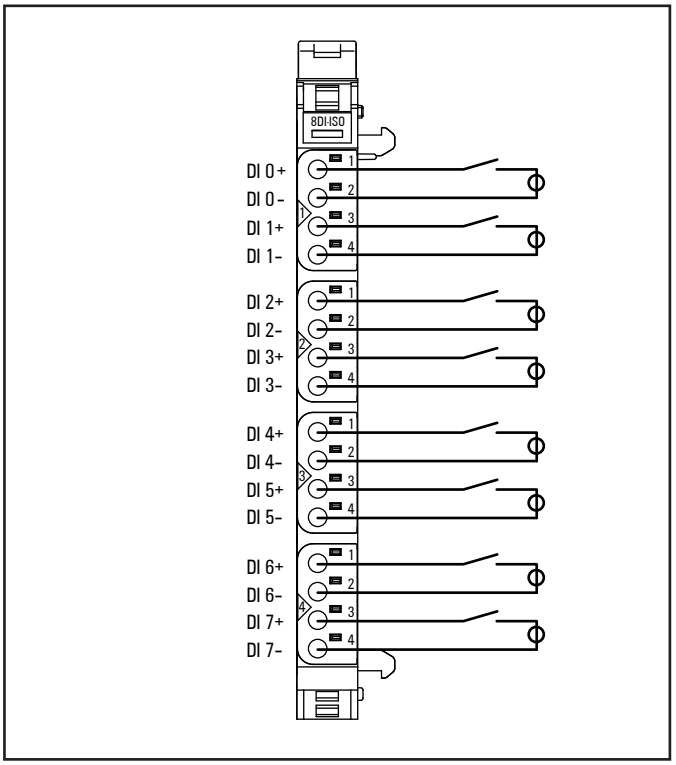

Connection diagram UR20-8DI-ISO-2W

The digital input module UR20-8DI-ISO-2W can detect up to 8 binary control signals. Two sensors can be connected to each connector using a 2-wire connection. A status LED is assigned to each channel. The inputs are insulated from each other and from the system supply.

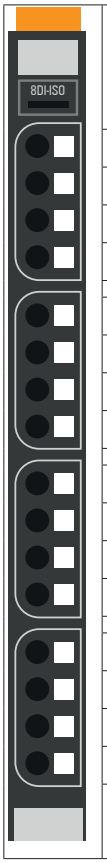

	Module status LED Green: Communication over the system bus Red: Error
1.2	Yellow: Input 0 active
1.4	Yellow: Input 1 active
2.2	Yellow: Input 2 active
2.4	Yellow: Input 3 active
3.2	Yellow: Input 4 active
3.4	Yellow: Input 5 active
4.2	Yellow: Input 6 active
4.4	Yellow: Input 7 active

LED indicators UR20-8DI-ISO-2W, troubleshooting see Chapter 12

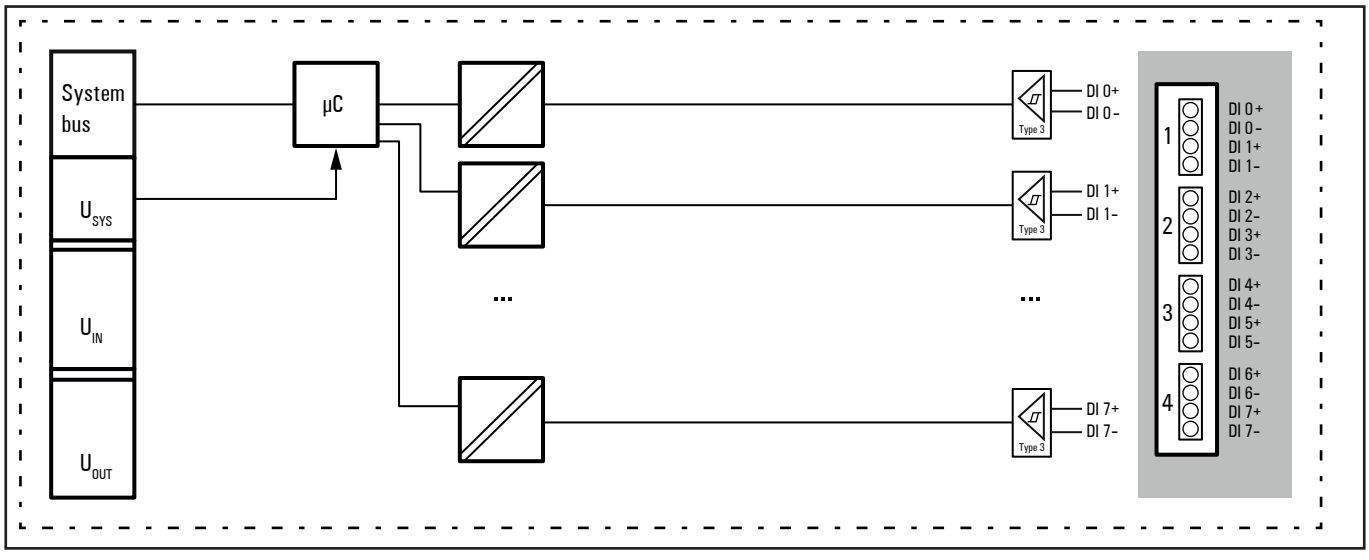

Block diagram UR20-8DI-ISO-2W

Technical data UR20-8DI-ISO-2W (Item No. 2457240000)

System data	
Data	Process, parameter and diagnostic data depend on the coupler used, see coupler description.
Interface	u-remote system bus
System bus transfer rate	48 Mbps
Inputs	
Number	8
Input type	for Type 1 and Type 3 sensors as per IEC 61131-2 for 24 V DC and 48 V DC
Input filter	Input delay adjustable from 0 to 40 ms
Low input voltage	< 10 V DC
High input voltage	> 11 DC
Sensor supply	no
Sensor connection	2-wire
Reverse polarity protection	yes
Module diagnosis	yes
Individual channel diagnosis	no
Isolation	500 V (channel to channel), 500 V (channel to supply voltage)
Supply	
Supply voltage	no
Current consumption from system current path I_{SYS}	8 mA
Current consumption from input current path I_{IN}	no
General data	
Weight (operational status)	85 g
For additional general data, see Section 3.4	

Overview of the editable parameters UR20-8DI-ISO-2W

Channel	Description	Options[1)]	Default
0 ... 7	Input delay	no (0) / 0,3 ms (1) / 3 ms (2) / 10 ms (3) / 20 ms (4) / 40 ms (5)	3 ms

1) Values in brackets for Modbus-TCP (firmware version 02.00.00 and higher), CANopen, EtherCAT and EtherNet/IP via module parameter class

Diagnostic data UR20-8DI-ISO-2W

Name	Bytes	Bit	Description	Default
Error indicator	0	0	Module error	
		1	Internal error	
		2	External error	
		3	Channel error	0
		4	Error	
		5	Reserved	0
		6	Reserved	0
		7	Parameter error	
Module type	1	0	Module Type	0x0F
		1		
		2		
		3		
		4	Reserved	0
		5	Reserved	0
		6	Reserved	0
		7	Reserved	0
Error byte 2	2	0 ... 7	Reserved	0
Error byte 3	3	0 ... 2	Reserved	0
		3	Internal diagnostic FIFO full	0
		4 ... 7	Reserved	0
Channel type	4	0 ... 6	Channel type	0x70
		7	Reserved	0
Diagnostic bits per channel	5		Number of diagnostic bit per channel	0
Number of channels	6		Number of similar channels per module	8
Channel error	7 ... 10	0 ... 31	Reserved	0
Channel 0 error to Channel 31 error	11 ... 42	0 ... 7	Reserved	0
Time stamp	43-46		time stamp [µs] (32bit)	

Process data inputs UR20-8DI-ISO-2W

Byte	Bit	Description
IB0	IX0.0	DI0
	IX0.1	DI1
	IX0.2	DI2
	IX0.3	DI3
	IX0.4	DI4
	IX0.5	DI5
	IX0.6	DI6
	IX0.7	DI7

6.16 Digital output module UR20-4DO-P

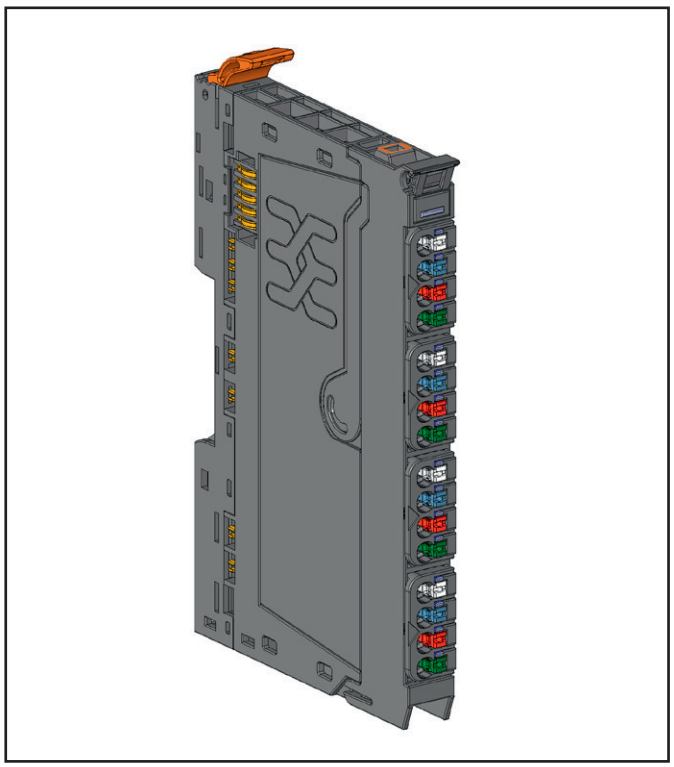

Digital output module UR20-4DO-P (Item No. 1315220000)

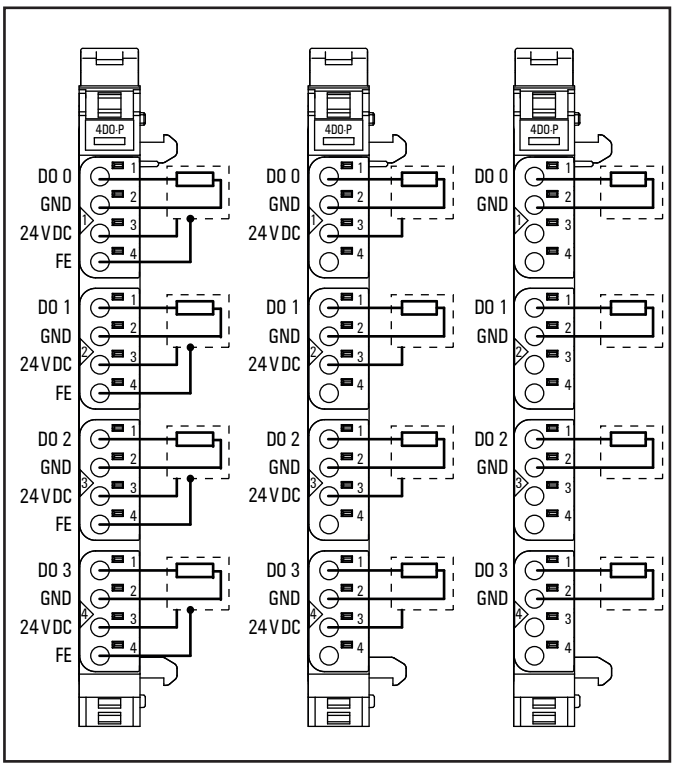

Connection diagram UR20-4DO-P

The UR20-4DO-P digital output module can control up to 4 actuators each with a maximum of 0.5 A. One actuator can be connected to each connector using a 2-wire, 3-wire or 3-wire connection + FE. A status LED is assigned to each channel. The outputs are supplied with power from the output current path (I_{OUT}).

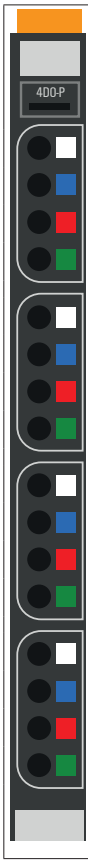

	Module status LED Green: Communication over the system bus Red: Error
1.1	Yellow: Output 0 active
2.1	Yellow: Output 1 active
3.1	Yellow: Output 2 active
4.1	Yellow: Output 3 active

LED indicators UR20-4DO-P, troubleshooting see Chapter 12

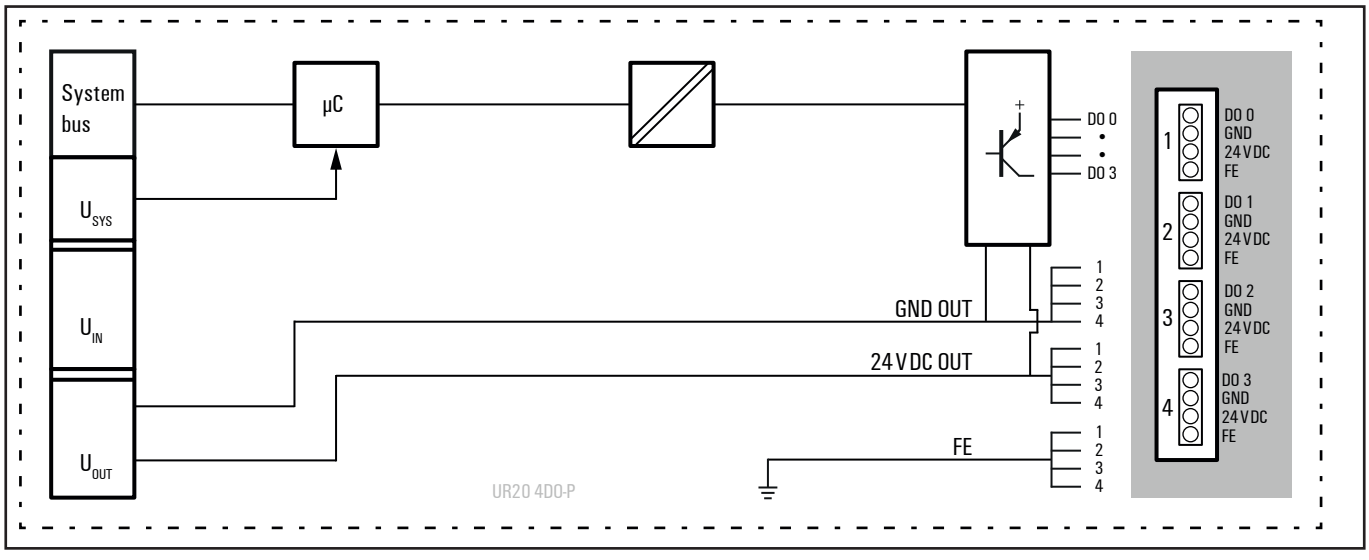

Block diagram UR20-4DO-P

Technical data UR20-4DO-P (Item No. 1315220000)

System data		
Data	Process, parameter and diagnostic data depend on the coupler used, see coupler description.	
Interface	u-remote system bus	
System bus transfer rate	48 Mbps	
Outputs		
Number	4	
Type	P-switching	
Type of load	ohmic, inductive, lamp load	
Response time	low » high max. 100 µs; high » low max. 250 µs	
Max. output current	per channel	0.5 A
	per module	2 A
Breaking energy (inductive)	150 mJ per channel	
Switching frequency	Ohmic load (min. 47 Ω)	1 kHz
	Inductive load (DC 13)	0.2 Hz without free-wheeling diode 1 kHz with suitable free-wheeling diode
	Lamp load (12 W)	1 kHz
Actuator connection	2-wire, 3-wire, 3-wire + FE	
Actuator supply	max. 2 A per plug, total max. 8 A	
Short-circuit-proof	yes	
Protective circuit	Constant current with thermal switch-off and automatic restart	
Response time of the current limiting circuit	<100 µs	
Module diagnosis	yes	
Individual channel diagnosis	no	
Can be used with PF-O-xDI-SIL	yes	
Supply		
Supply voltage	24 V DC +20 %/-15 %	
Current consumption from system current path I_{SYS}	8 mA	
Current consumption from output current path I_{OUT}	20 mA + load	
General data		
Weight (operational status)	86 g	
For additional general data, see Section 3.4		

Overview of the editable parameter UR20-4DO-P

Channel	Description	Options[1)]	Default
0 ... 3	Substitute value	Off (0) / On (1)	Off

1) Values in brackets for Modbus-TCP (firmware version 02.00.00 and higher), CANopen, EtherCAT and EtherNet/IP via module parameter class

Diagnostic data UR20-4DO-P

Name	Bytes	Bit	Description	Default
Error indicator	0	0	Module error	
		1	Internal error	
		2	External error	
		3	Channel error	0
		4	Error	
		5	Reserved	0
		6	Reserved	0
		7	Parameter error	
Module type	1	0	Module Type	0x0F
		1		
		2		
		3		
		4	Reserved	0
		5	Reserved	0
		6	Reserved	0
		7	Reserved	0
Error byte 2	2	0 - 7	Reserved	0
Error byte 3	3	0 - 2	Reserved	0
		3	Internal diagnostic FIFO full	0
		4 - 7	Reserved	0
Channel type	4	0 - 6	Channel type	0x72
		7	Reserved	0
Diagnostic bits per channel	5		Number of diagnostic bit per channel	0
Number of channels	6		Number of similar channels per module	4
Channel error	7 - 10	0 - 31	Reserved	0
Channel 0 error to Channel 31 error	11 to 42	0 - 7	Reserved	0
Time stamp	43 - 46		Time stamp [µs] (32 bit)	

Process data outputs UR20-4DO-P

Byte	Bit	Description
QB0	QX0.0	DO0
	QX0.1	DO1
	QX0.2	DO2
	QX0.3	DO3
	QX0.4	Reserved
	QX0.5	Reserved
	QX0.6	Reserved
	QX0.7	Reserved

6.17 Digital output module UR20-4DO-P-2A

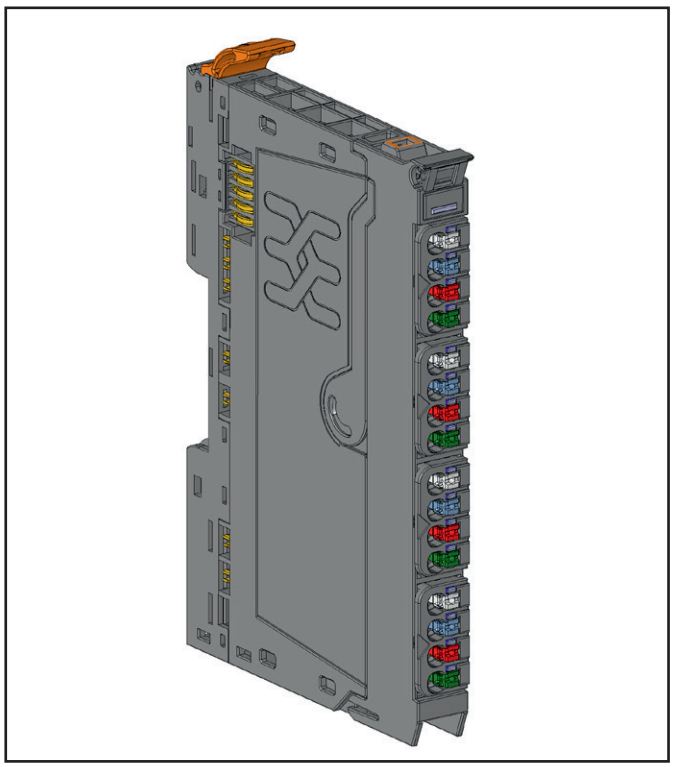

Digital output module UR20-4DO-P-2A (Item No. 1315230000)

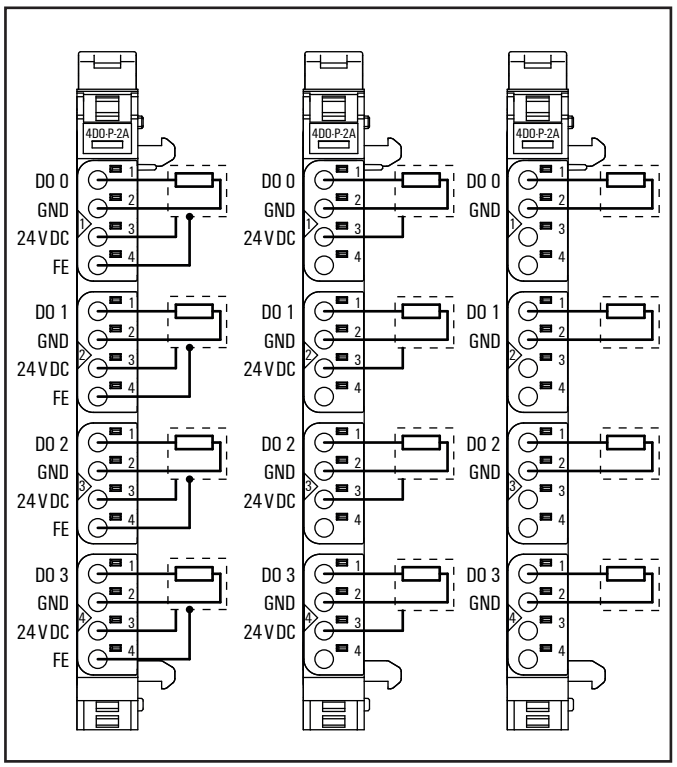

Connection diagram UR20-4DO-P-2A

The digital output module UR20-4DO-P-2A can control up to 4 actuators, each with a maximum of 2 A. One actuator can be connected to each connector using a 2-wire, 3-wire or 3-wire connection + FE. A status LED is assigned to each channel. The outputs are supplied with power from the output current path (I_{OUT}).

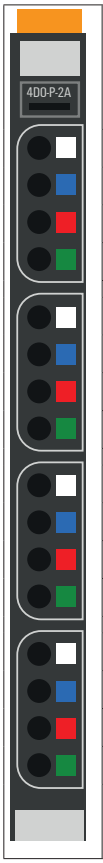

	Module status LED Green: Communication over the system bus Red: Error
1.1	Yellow: Output 0 active
2.1	Yellow: Output 1 active
3.1	Yellow: Output 2 active
4.1	Yellow: Output 3 active

LED indicators UR20-4DO-P-2A, troubleshooting see Chapter 12

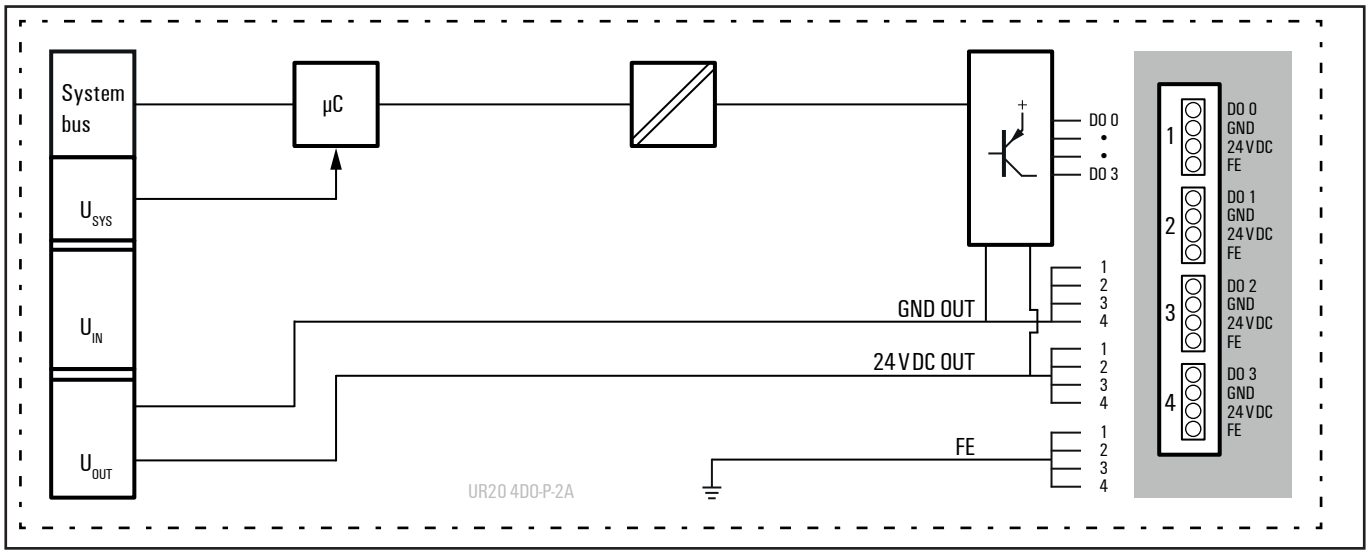

Block diagram UR20-4DO-P-2A

Technical data UR20-4DO-P-2A (Item No. 1315230000)

System data		
Data	Process, parameter and diagnostic data depend on the coupler used, see coupler description.	
Interface	u-remote system bus	
System bus transfer rate	48 Mbps	
Outputs		
Number	4	
Type	P-switching	
Type of load	ohmic, inductive, lamp load	
Response time	low » high max. 100 µs; high » low max. 250 µs	
Max. output current	per channel	2 A
	per module	8 A
Breaking energy (inductive)	150 mJ per channel	
Switching frequency	Ohmic load (min. 47 Ω)	1 kHz
	Inductive load (DC 13)	0.2 Hz without free-wheeling diode 1 kHz with suitable free-wheeling diode
	Lamp load (48 W)	1 kHz
Actuator connection	2-wire, 3-wire, 3-wire + FE	
Actuator supply	max. 2 A per plug, total max. 8 A	
Leakage current	<0.250 mA	
Short-circuit-proof	yes	
Protective circuit	Constant current with thermal switch-off and automatic restart	
Response time of the current limiting circuit	<100 µs	
Module diagnosis	yes	
Individual channel diagnosis	no	
Can be used with PF-O-xDI-SIL	yes	
Supply		
Supply voltage	24 V DC +20 %/-15 %	
Current consumption from system current path I_{SYS}	8 mA	
Current consumption from output current path I_{OUT}	25 mA + load	
General data		
Weight (operational status)	86 g	
For additional general data, see Section 3.4		

Overview of the editable parameter UR20-4DO-P-2A

Channel	Description	Options[1)]	Default
0 ... 3	Substitute value	Off (0) / On (1)	Off

1) Values in brackets for Modbus-TCP (firmware version 02.00.00 and higher), CANopen, EtherCAT and EtherNet/IP via module parameter class

Diagnostic data UR20-4DO-P-2A

Name	Bytes	Bit	Description	Default
Error indicator	0	0	Module error	
		1	Internal error	
		2	External error	
		3	Channel error	0
		4	Error	
		5	Reserved	0
		6	Reserved	0
		7	Parameter error	
Module type	1	0	Module Type	0x0F
		1		
		2		
		3		
		4	Reserved	0
		5	Reserved	0
		6	Reserved	0
		7	Reserved	0
Error byte 2	2	0 - 7	Reserved	0
Error byte 3	3	0 - 2	Reserved	0
		3	Internal diagnostic FIFO full	0
		4 - 7	Reserved	0
Channel type	4	0 - 6	Channel type	0x72
		7	Reserved	0
Diagnostic bits per channel	5		Number of diagnostic bit per channel	0
Number of channels	6		Number of similar channels per module	4
Channel error	7 - 10	0 - 31	Reserved	0
Channel 0 error to Channel 31 error	11 to 42	0 - 7	Reserved	0
Time stamp	43 - 46		Time stamp [µs] (32 bit)	

Process data outputs UR20-4DO-P-2A

Byte	Bit	Description
QB0	QX0.0	DO0
	QX0.1	DO1
	QX0.2	DO2
	QX0.3	DO3
	QX0.4	Reserved
	QX0.5	Reserved
	QX0.6	Reserved
	QX0.7	Reserved

6.18 Digital output module UR20-4DO-PN-2A

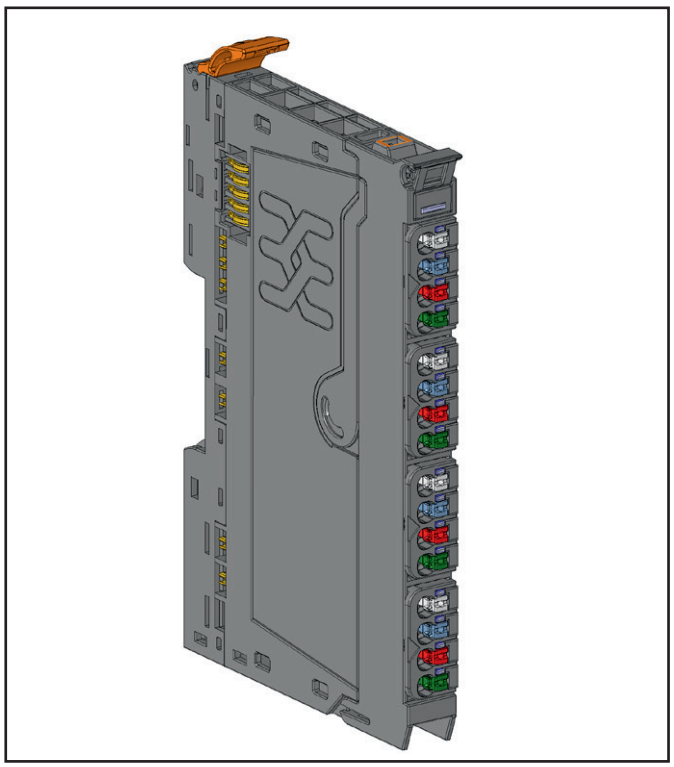

Digital output module UR20-4DO-PN-2A (Item No. 1394420000)

The digital output module UR20-4DO-PN-2A can control up to 4 actuators each with a maximum of 2 A. One actuator can be connected to each connector in a 2-wire or 3-wire + FE connection. A status LED is assigned to each channel. The outputs are supplied with power from the output current path (I_{OUT}).

Each channel can be switched between positive and negative switching. This allows, among other things, a switch in rotational direction if an DC motor is connected between two outputs. For this purpose, an output byte is reserved for the physical outputs, and each channel is assigned two bits in this byte. The switching characteristics of each output are set in the low nibble of the byte. If a bit is set, the corresponding channel has positive switching, if it is 0 then it has negative switching. The outputs are switched in the high nibble. Example: If you write the value 185 decimal (1011 1001 binary) in the output byte, channel 1 is set to 24 V, channel 2 is set to GND, channel 3 is deactivated and channel 4 is set to 24 V.

The module is protected against external voltages between 0 V and the operating voltage.

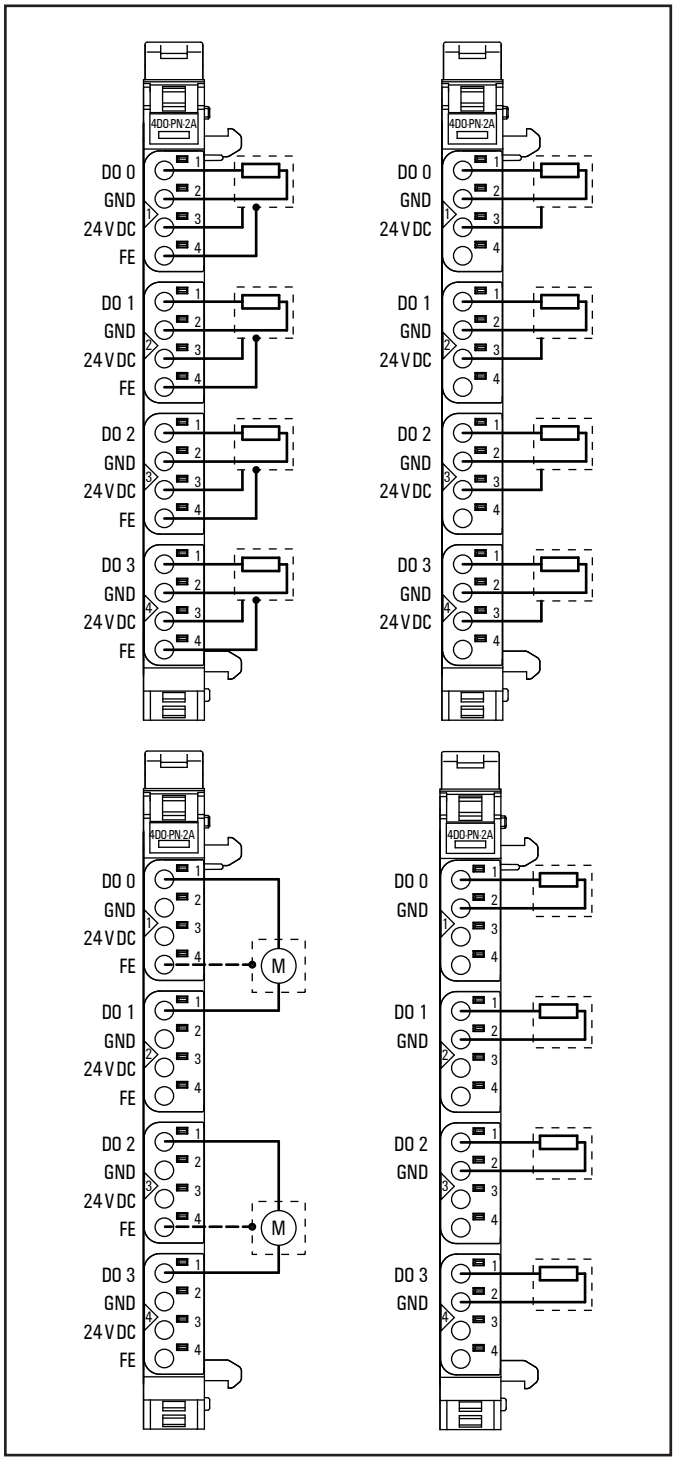

Connection diagram UR20-4DO-PN-2A

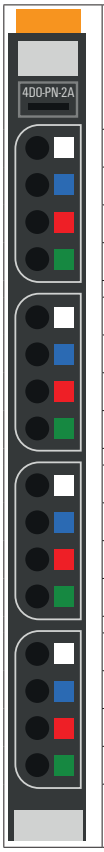

	Module status LED Green: Communication over the system bus Red: Error
1.1	Yellow: Output 0 active, P or N-switching (sourcing or sinking)
2.1	Yellow: Output 1 active, P or N-switching (sourcing or sinking)
3.1	Yellow: Output 2 active, P or N-switching (sourcing or sinking)
4.1	Yellow: Output 3 active, P or N-switching (sourcing or sinking)

LED indicators UR20-4DO-PN-2A, troubleshooting see Chapter 12

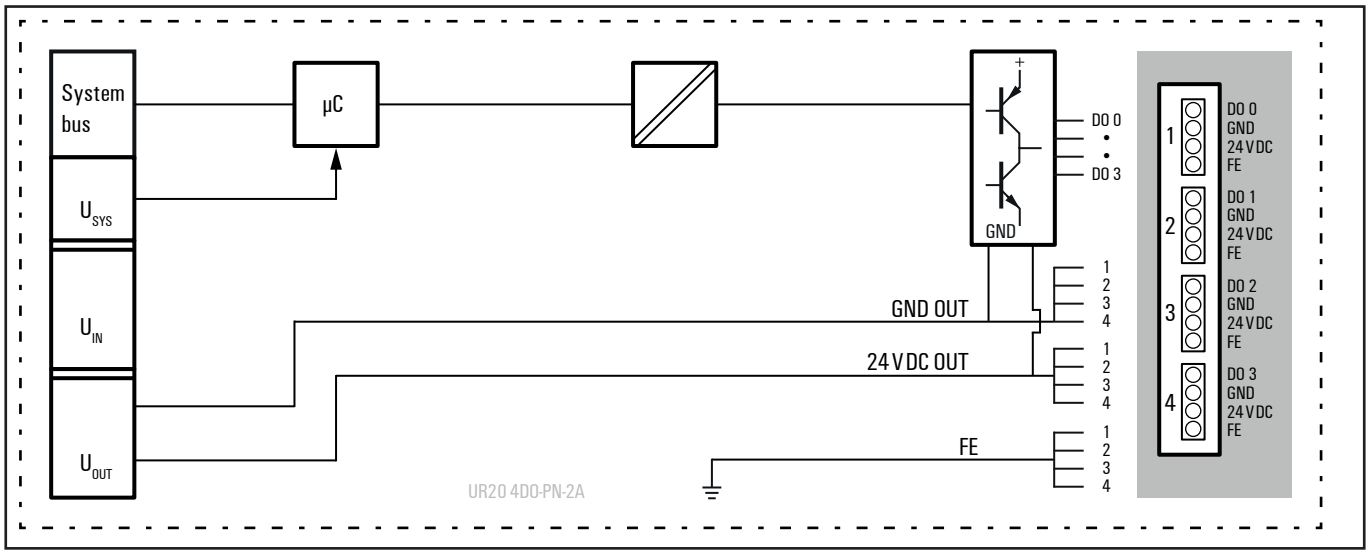

Block diagram UR20-4DO-PN-2A

Technical data UR20-4DO-PN-2A (Item No. 1394420000)

System data		
Data	Process, parameter and diagnostic data depend on the coupler used, see coupler description.	
Interface	u-remote system bus	
System bus transfer rate	48 Mbps	
Outputs		
Number	4	
Type	switchable P- or N-switching	
Type of load	ohmic, inductive, lamp load	
Response time	low » high max. 100 µs; high » low max. 250 µs	
Max. output current	per channel	2 A
	per module	8 A
Breaking energy (inductive)	150 mJ per channel	
Switching frequency	Ohmic load (min. 47 Ω)	1 kHz
	Inductive load (DC 13)	2 Hz without free-wheeling diode 1 kHz with suitable free-wheeling diode
	Lamp load (48 W)	1 kHz
Actuator connection	2-wire, 3-wire, 3-wire + FE	
Short-circuit-proof	yes	
Actuator supply	max. 2 A per plug, total max. 8 A	
Protective circuit	Constant current with thermal switch-off and automatic restart	
Response time of the current limiting circuit	<100 µs	
Module diagnosis	yes	
Individual channel diagnosis	no	
Can be used with PF-O-xDI-SIL	yes	
Supply		
Supply voltage	24 V DC +20 %/-15 %	
Current consumption from system current path I_{SYS}	8 mA	
Current consumption from output current path I_{OUT}	20 mA + load	
General data		
Weight (operational status)	86 g	
For additional general data, see Section 3.4		

Overview of the editable parameter UR20-4DO-PN-2A

Channel	Description	Options[1)]	Default
0 ... 3	Substitute value OP-Mode	Sinking (0) / Sourcing (1)	Sourcing
0 ... 3	Substitute value	Off (0) / On (1)	Off

1) Values in brackets for Modbus-TCP (firmware version 02.00.00 and higher), CANopen, EtherCAT and EtherNet/IP via module parameter class

Diagnostic data UR20-4DO-PN-2A

Name	Byte	Bit	Description	Default
Error indicator	0	0	Module error	
		1	Internal error	
		2	External error	
		3	Channel error	0
		4	Error	
		5	Reserved	0
		6	Reserved	0
		7	Parameter error	
Module type	1	0	Module Type	0x0F
		1		
		2		
		3		
		4	Reserved	0
		5	Reserved	0
		6	Reserved	0
		7	Reserved	0
Error byte 2	2	0 ... 7	Reserved	0
Error byte 3	3	0 ... 2	Reserved	0
		3	Internal diagnostic FIFO full	0
		4 ... 7	Reserved	0
Channel type	4	0 ... 6	Channel type	0x72
		7	Reserved	0
Diagnostic bits per channel	5		Number of diagnostic bit per channel	0
Number of channels	6		Number of similar channels per module	4
Channel error	7 ... 10	0 ... 31	Reserved	0
Channel 0 error to Channel 31 error	11 ... 42	0 ... 7	Reserved	0
Time stamp	43-46		time stamp [µs] (32bit)	

Process data outputs UR20-4DO-PN-2A

Byte	Format	Name	Remark
QB0	QX0.0	OP-mode DO0	0: Sinking, 1: Sourcing
	QX0.1	OP-mode DO1	0: Sinking, 1: Sourcing
	QX0.2	OP-mode DO2	0: Sinking, 1: Sourcing
	QX0.3	OP-mode DO3	0: Sinking, 1: Sourcing
	QX0.4	DO0	
	QX0.5	DO1	
	QX0.6	DO2	
	QX0.7	DO3	

6.19 Digital output module UR20-8DO-P

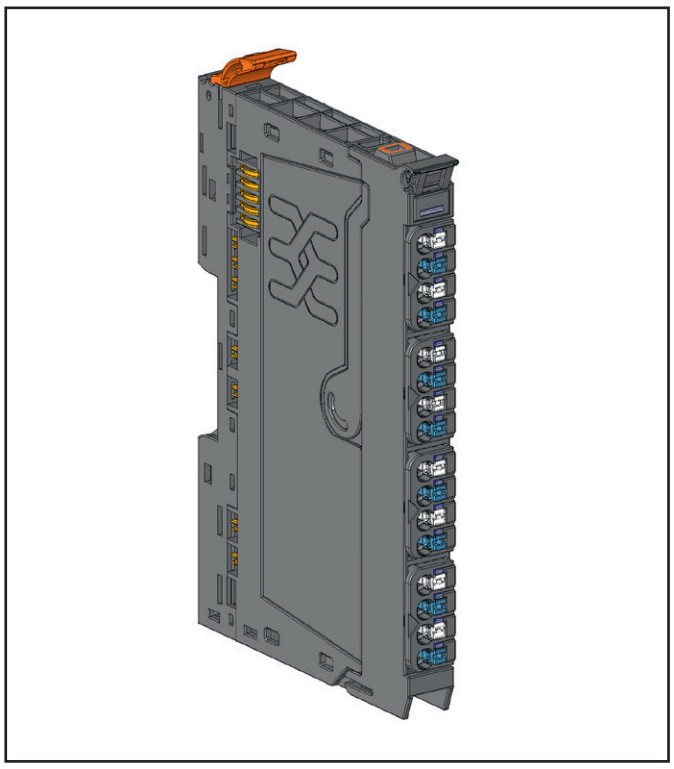

Digital output module UR20-8DO-P (Item No. 1315240000)

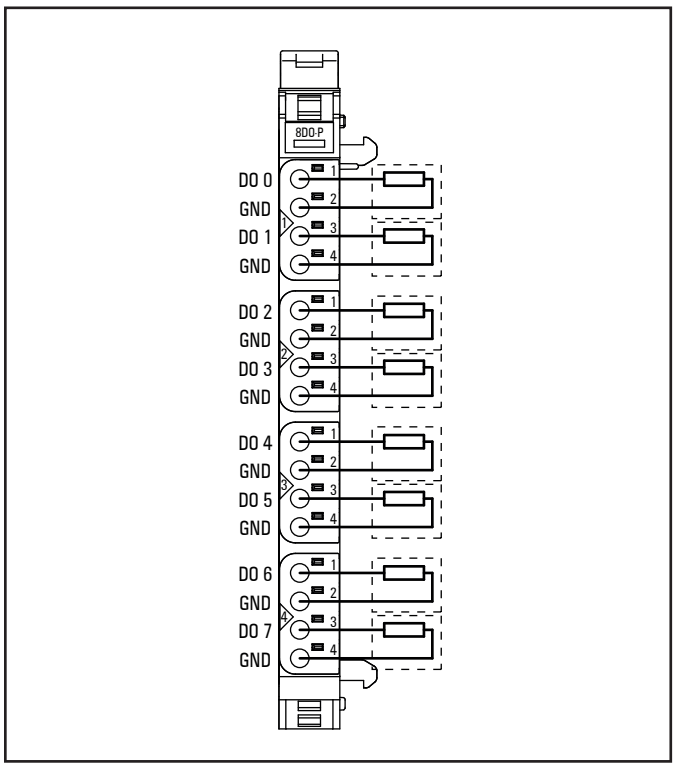

Connection diagram UR20-8DO-P

The UR20-8DO-P digital output module can control up to 8 actuators each with a maximum of 0.5 A. Actuators can be connected to each connector in a 2-wire connection. A status LED is assigned to each channel. The outputs are supplied with power from the output current path (I_{OUT}).



	Module status LED Green: Communication over the system bus Red: Error
1.1	Yellow: Output 0 active
1.3	Yellow: Output 1 active
2.1	Yellow: Output 2 active
2.3	Yellow: Output 3 active
3.1	Yellow: Output 4 active
3.3	Yellow: Output 5 active
4.1	Yellow: Output 6 active
4.3	Yellow: Output 7 active

LED indicators UR20-8DO-P, troubleshooting see Chapter 12

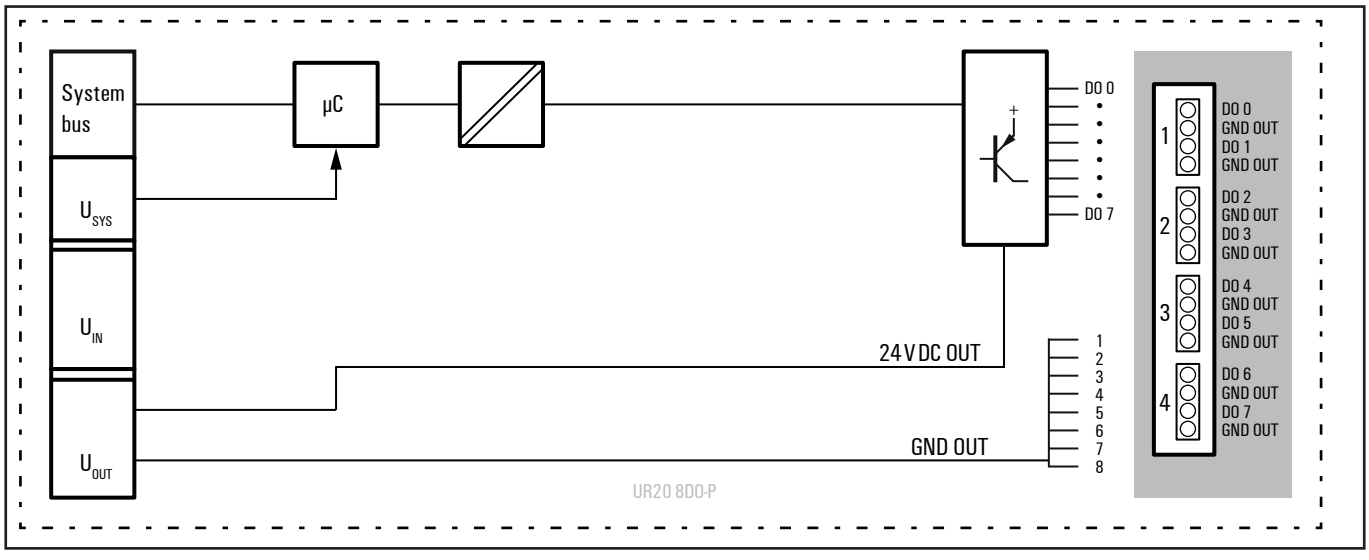

Block diagram UR20-8DO-P

Technical data UR20-8DO-P (Item No. 1315240000)

System data		
Data	Process, parameter and diagnostic data depend on the coupler used, see coupler description.	
Interface	u-remote system bus	
System bus transfer rate	48 Mbps	
Outputs		
Number	8	
Type	P-switching	
Type of load	ohmic, inductive, lamp load	
Response time	low » high max. 100 µs; high » low max. 250 µs	
Max. output current	per channel	0.5 A
	per module	4 A
Breaking energy (inductive)	150 mJ per channel	
Switching frequency	Ohmic load (min. 47 Ω)	1 kHz
	Inductive load (DC 13)	0,2 Hz without free-wheeling diode 1 kHz with suitable free-wheeling diode
	Lamp load (12 W)	1 kHz
Actuator connection	2-wire	
Short-circuit-proof	yes	
Protective circuit	Constant current with thermal switch-off and automatic restart	
Response time of the current limiting circuit	<100 µs	
Module diagnosis	yes	
Individual channel diagnosis	no	
Can be used with PF-O-xDI-SIL	yes	
Supply		
Supply voltage	24 V DC +20 %/-15 %	
Current consumption from system current path I_{SYS}	8 mA	
Current consumption from output current path I_{OUT}	30 mA + load	
General data		
Weight (operational status)	87 g	
For additional general data, see Section 3.4		

Overview of the editable parameter UR20-8DO-P

Channel	Description	Options[1)]	Default
0 ... 7:	Substitute value	Off (0) / On (1)	Off (0)

1) Values in brackets for Modbus-TCP (firmware version 02.00.00 and higher), CANopen, EtherCAT and EtherNet/IP via module parameter class

Diagnostic data UR20-8DO-P

Name	Bytes	Bit	Description	Default
Error indicator	0	0	Module error	
		1	Internal error	
		2	External error	
		3	Channel error	0
		4	Error	
		5	Reserved	0
		6	Reserved	0
		7	Parameter error	
Module type	1	0	Module Type	0x0F
		1		
		2		
		3		
		4	Reserved	0
		5	Reserved	0
		6	Reserved	0
		7	Reserved	0
Error byte 2	2	0 ... 7	Reserved	0
Error byte 3	3	0 ... 2	Reserved	0
		3	Internal diagnostic FIFO full	0
		4 ... 7	Reserved	0
Channel type	4	0 ... 6	Channel type	0x72
		7	Reserved	0
Diagnostic bits per channel	5		Number of diagnostic bit per channel	0
Number of channels	6		Number of similar channels per module	8
Channel error	7 - 10	0 ... 31	Reserved	0
Channel 0 error to Channel 31 error	11 to 42	0 ... 7	Reserved	0
Time stamp	43 - 46		time stamp [µs] (32bit)	

Process data outputs UR20-8DO-P

Byte	Bit	Description
QB0	QX0.0	DO0
	QX0.1	DO1
	QX0.2	DO2
	QX0.3	DO3
	QX0.4	DO4
	QX0.5	DO5
	QX0.6	DO6
	QX0.7	DO7

6.20 Digital output module UR20-8DO-P-2W-HD



Digital output module UR20-8DO-P-2W-HD (Item No. 1509830000)

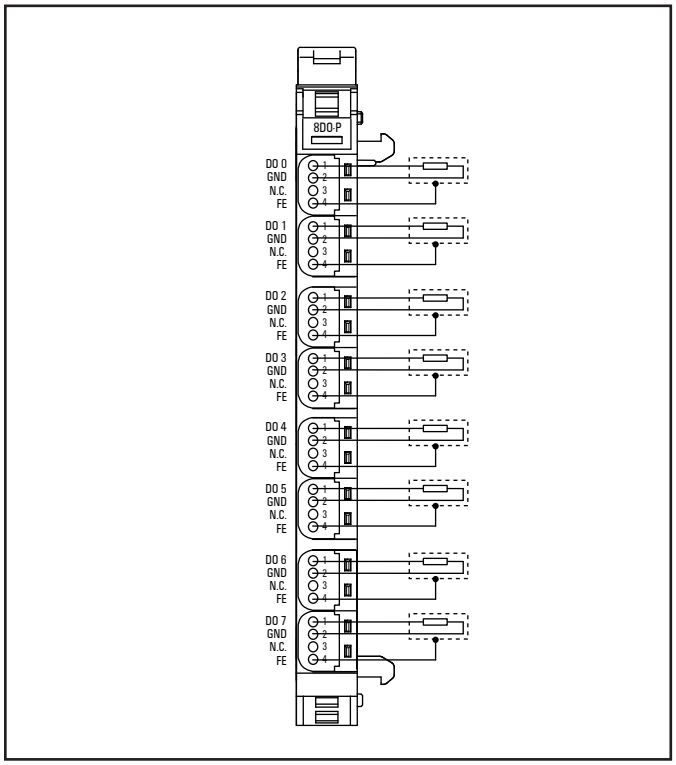

Connection diagram UR20-8DO-P-2W-HD

The UR20-8DO-P-2W-HD digital output module can control up to 8 actuators each with a maximum of 0.5 A. Actuators can be connected to each connector in a 2-wire or 2-wire + FE connection (IDC). A status LED is assigned to each channel. The outputs are supplied with power from the output current path (U_{OUT}).

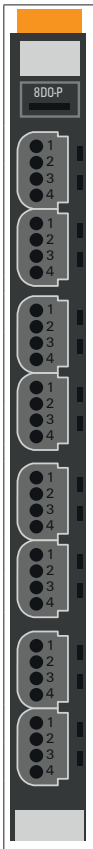

	Module status LED Green: Communication over the system bus Red: Error
1.1	Yellow: Output 0 active
2.1	Yellow: Output 1 active
3.1	Yellow: Output 2 active
4.1	Yellow: Output 3 active
5.1	Yellow: Output 4 active
6.1	Yellow: Output 5 active
7.1	Yellow: Output 6 active
8.1	Yellow: Output 7 active

LED indicators UR20-8DO-P-2W-HD, troubleshooting see Chapter 12

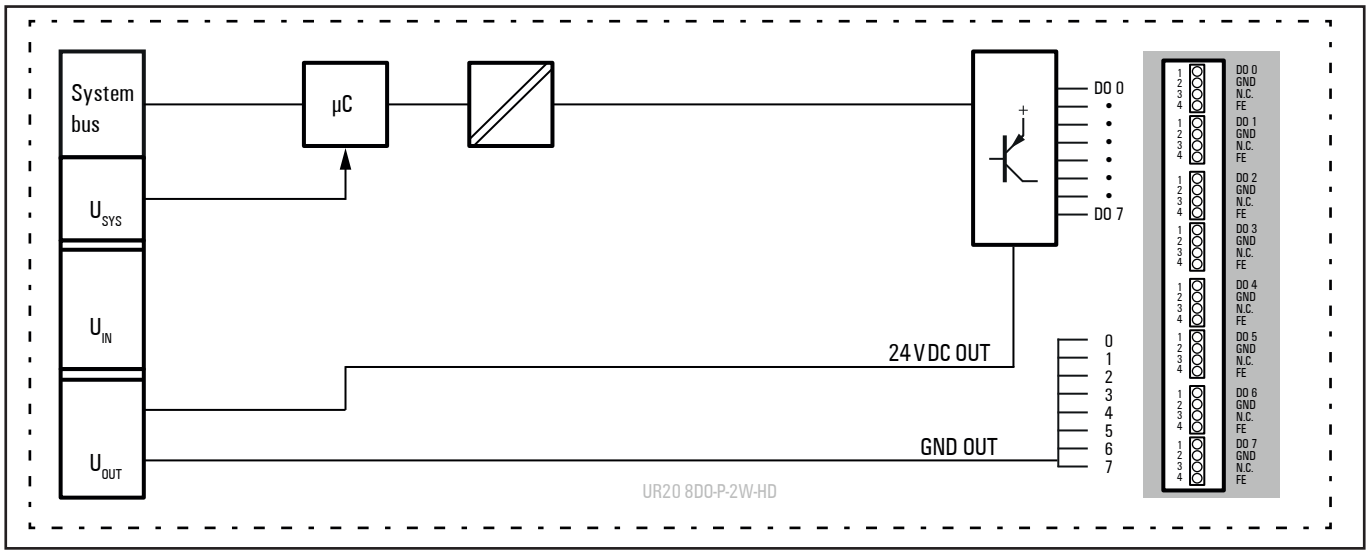

Block diagram UR20-8DO-P-2W-HD

Technical data UR20-8DO-P-2W-HD (Item No. 1509830000)

System data		
Data	Process, parameter and diagnostic data depend on the coupler used, see coupler description.	
Interface	u-remote system bus	
System bus transfer rate	48 Mbps	
Outputs		
Number	8	
Type	P-switching	
Type of load	ohmic, inductive, lamp load	
Response time	low » high max. 50 µs; high » low max. 100 µs	
Max. output current	per channel	0.5 A
	per module	4 A
Breaking energy (inductive)	150 mJ per channel	
Switching frequency	Ohmic load (min. 47 Ω)	1 kHz
	Inductive load (DC 13)	0.2 Hz without free-wheeling diode 1 kHz with suitable free-weheeling diode
	Lamp load (12 W)	1 kHz
Actuator connection	2-wire, 2-wire + FE	
Short-circuit-proof	yes	
Protective circuit	Constant current with thermal switch-off and automatic restart	
Response time of the current limiting circuit	<100 µs	
Module diagnosis	yes	
Individual channel diagnosis	no	
Can be used with PF-O-xDI-SIL	yes	
Supply		
Supply voltage	24 V DC +20 %/-15 %	
Current consumption from system current path I_{SYS}	8 mA	
Current consumption from output current path I_{OUT}	40 mA + load	
Connection data		
Type of connection	Insulation Displacement Connection (IDC)	
Line connection cross-section	Single-wired, Fine-wired	0.14 … 0.35 mm²
General data		
Weight (operational status)	88 g	
For additional general data, see Section 3.4		

Overview of the editable parameter UR20-8DO-P-2W-HD

Channel	Description	Options[1)]	Default
0 ... 7:	Substitute value	Off (0) / On (1)	Off

1) Values in brackets for Modbus-TCP (firmware version 02.00.00 and higher), CANopen, EtherCAT and EtherNet/IP via module parameter class

Diagnostic data UR20-8DO-P-2W-HD

Name	Byte	Bit	Description	Default
Error indicator	0	0	Module error	
		1	Internal error	
		2	External error	
		3	Channel error	0
		4	Error	
		5	Reserved	0
		6	Reserved	0
		7	Parameter error	
Module type	1	0	Module Type	0x0F
		1		
		2		
		3		
		4	Reserved	0
		5	Reserved	0
		6	Reserved	0
		7	Reserved	0
Error byte 2	2	0 ... 7	Reserved	0
Error byte 3	3	0 ... 2	Reserved	0
		3	Internal diagnostic FIFO full	0
		4 ... 7	Reserved	0
Channel type	4	0 ... 6	Channel type	0x72
		7	Reserved	0
Diagnostic bits per channel	5		Number of diagnostic bit per channel	0
Number of channels	6		Number of similar channels per module	8
Channel error	7 ... 10	0 ... 31	Reserved	0
Channel 0 error to Channel 31 error	11 ... 42	0 ... 7	Reserved	0
Time stamp	43-46		time stamp [µs] (32bit)	

Process data outputs UR20-8DO-P-2W-HD

Byte	Bit	Description
QB0	QX0.0	DO0
	QX0.1	DO1
	QX0.2	DO2
	QX0.3	DO3
	QX0.4	DO4
	QX0.5	DO5
	QX0.6	DO6
	QX0.7	DO7

6.21 Digital output module UR20-16DO-P

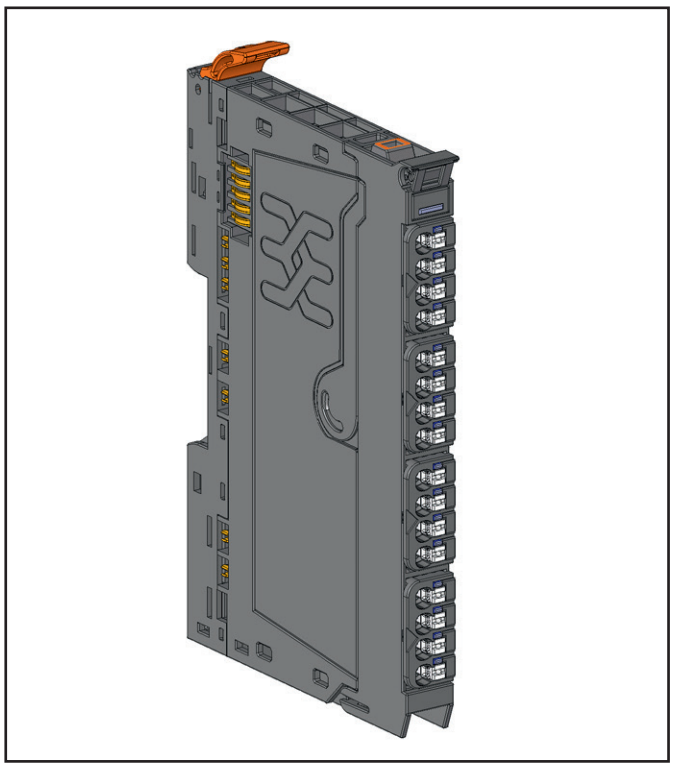

Digital output module UR20-16DO-P (Item No. 1315250000)

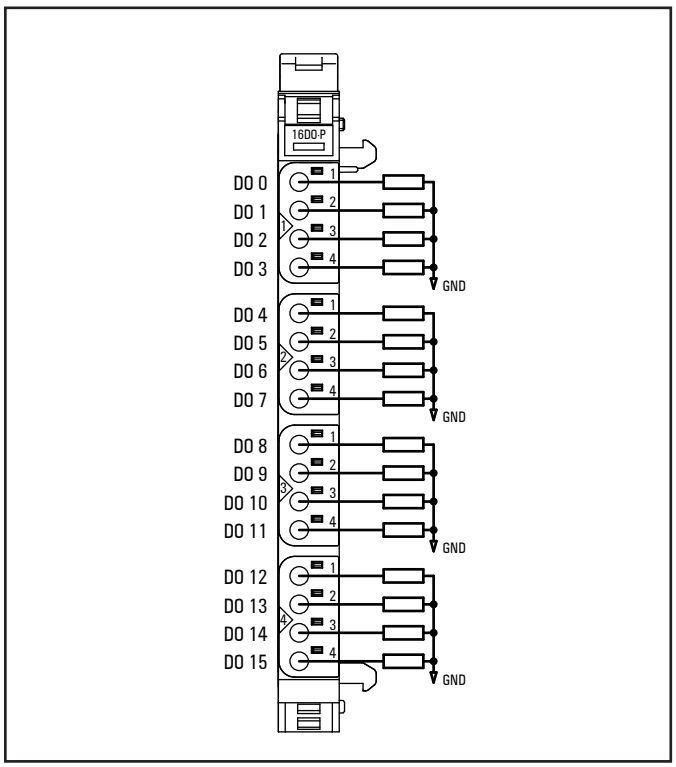

Connection diagram UR20-16DO-P

The UR20-16DO-P digital output module can control up to 16 actuators each with a maximum of 0.5 A. Four actuators can be connected to each connector. A status LED is assigned to each channel. The outputs are supplied with power from the output current path (I_{OUT}).



	Module status LED Green: Communication over the system bus Red: Error
1.1	Yellow: Output 0 active
1.2	Yellow: Output 1 active
1.3	Yellow: Output 2 active
1.4	Yellow: Output 3 active
2.1	Yellow: Output 4 active
2.2	Yellow: Output 5 active
2.3	Yellow: Output 6 active
2.4	Yellow: Output 7 active
3.1	Yellow: Output 8 active
3.2	Yellow: Output 9 active
3.3	Yellow: Output 10 active
3.4	Yellow: Output 11 active
4.1	Yellow: Output 12 active
4.2	Yellow: Output 13 active
4.3	Yellow: Output 14 active
4.4	Yellow: Output 15 active

LED indicators UR20-16DO-P, troubleshooting see Chapter 12

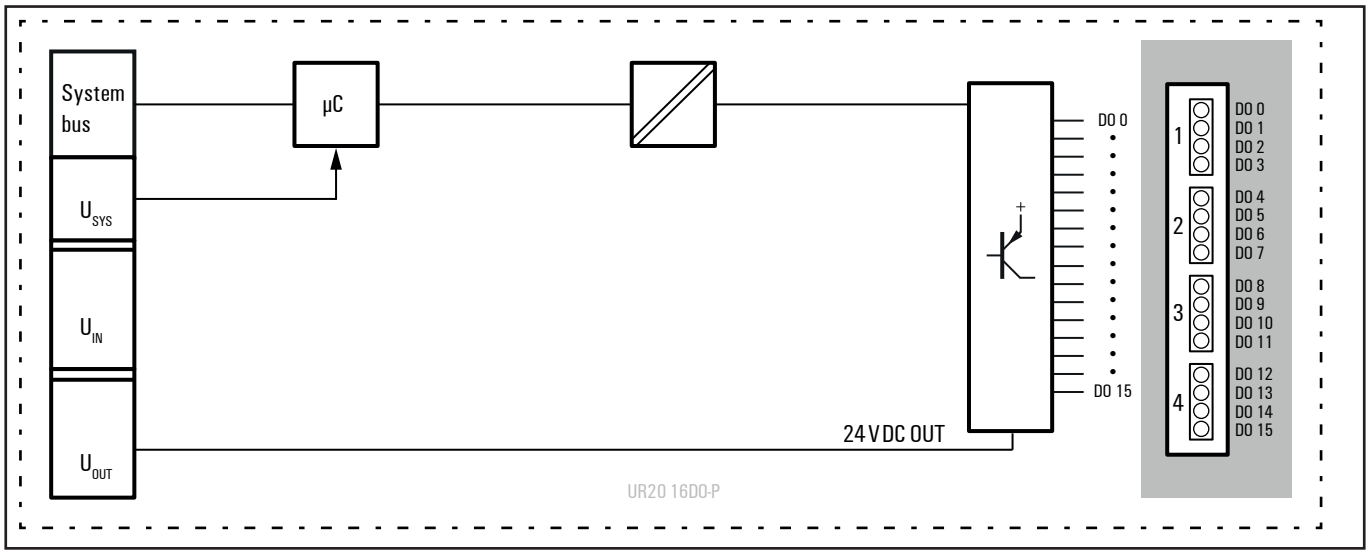

Block diagram UR20-16DO-P

Technical data UR20-16DO-P (Item No. 1315250000)

System data		
Data	Process, parameter and diagnostic data depend on the coupler used, see coupler description.	
Interface	u-remote system bus	
System bus transfer rate	48 Mbps	
Outputs		
Number	16	
Type	P-switching	
Type of load	ohmic, inductive, lamp load	
Response time	low » high max. 100 µs; high » low max. 250 µs	
Max. output current	per channel	0.5 A
	per module	8 A
Breaking energy (inductive)	150 mJ per channel	
Switching frequency	Ohmic load (min. 47 Ω)	1 kHz
	Inductive load (DC 13)	0.2 Hz without free-wheeling diode 1 kHz with suitable free-wheeling diode
	Lamp load (12 W)	1 kHz
Actuator connection	1-wire	
Short-circuit-proof	yes	
Protective circuit	Constant current with thermal switch-off and automatic restart	
Response time of the current limiting circuit	<100 µs	
Module diagnosis	yes	
Individual channel diagnosis	no	
Can be used with PF-O-xDI-SIL	yes	
Supply		
Supply voltage	24 V DC +20 %/-15 %	
Current consumption from system current path I_{SYS}	8 mA	
Current consumption from output current path I_{OUT}	25 mA + load	
General data		
Weight (operational status)	83 g	
For additional general data, see Section 3.4		

Diagnostic data UR20-16DO-P

Name	Bytes	Bit	Description	Default
Error indicator	0	0	Module error	
		1	Internal error	
		2	External error	
		3	Channel error	0
		4	Error	
		5	Reserved	0
		6	Reserved	0
		7	Parameter error	
Module type	1	0	Module Type	0x0F
		1		
		2		
		3		
		4	Reserved	0
		5	Reserved	0
		6	Reserved	0
		7	Reserved	0
Error byte 2	2	0 ... 7	Reserved	0
Error byte 3	3	0 ... 2	Reserved	0
		3	Internal diagnostic FIFO full	0
		4 ... 7	Reserved	0
Channel type	4	0 ... 6	Channel type	0x72
		7	Reserved	0
Diagnostic bits per channel	5		Number of diagnostic bit per channel	0
Number of channels	6		Number of similar channels per module	0
Channel error	7 ... 10	0 ... 31	Reserved	0
Channel 0 error to Channel 31 error	11 ... 42	0 ... 7	Reserved	0
Time stamp	43-46		time stamp [µs] (32bit)	

Process data[1] outputs UR20-16DO-P

Byte	Bit	Description
QB0	QX0.0	DO0
	QX0.1	DO1
	QX0.2	DO2
	QX0.3	DO3
	QX0.4	DO4
	QX0.5	DO5
	QX0.6	DO6
	QX0.7	DO7
QB1	QX1.0	DO8
	QX1.1	DO9
	QX1.2	DO10
	QX1.3	DO11
	QX1.4	DO12
	QX1.5	DO13
	QX1.6	DO14
	QX1.7	DO15

1) Internal process data mapping with data format “Standard”. Depending on the fieldbus specification and the data format of the communicating fieldbus components the bytes and/or words can be reversed during data transfer.

6.22 Digital output module UR20-16DO-P-PLC-INT

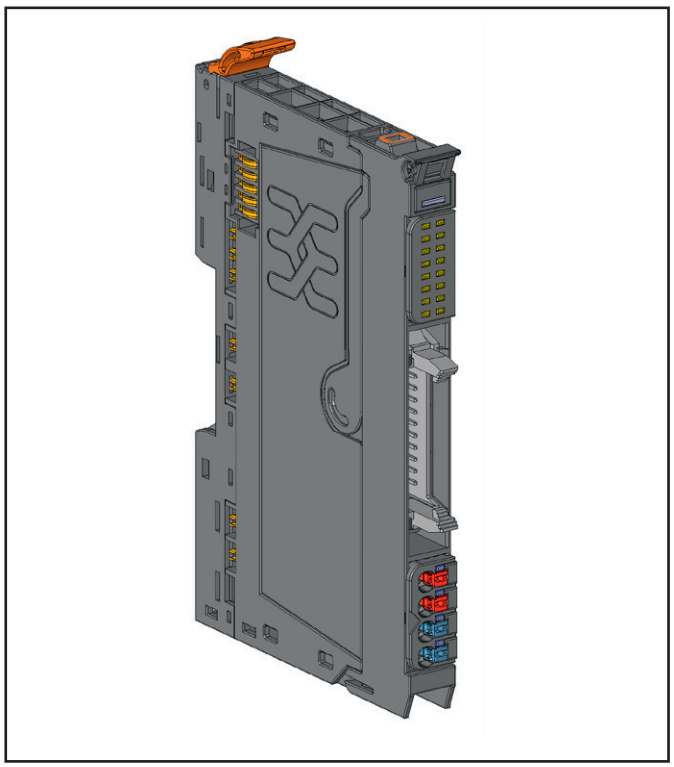

Digital output module UR20-16DO-P-PLC-INT (Item No. 1315270000)

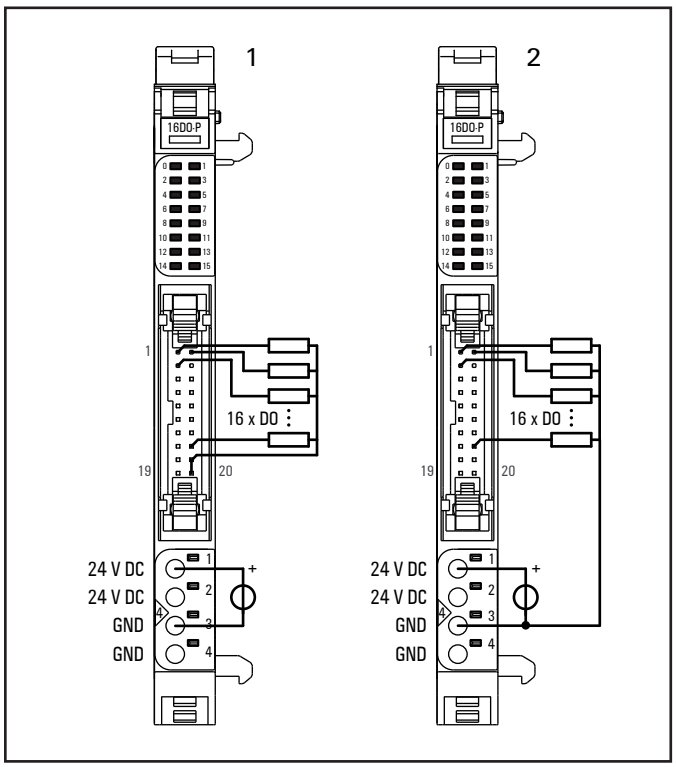

Connection diagram UR20-16DO-P-PLC-INT

The digital output module UR20-16DO-P-PLC-INT can control up to 16 actuators each with a maximum of 0.5 A. The actuators are connected via a 20-pole PLC connection. A status LED is assigned to each channel in a separate block.

The module as well as the actuators are supplied by one of both plugs. Each contact of the PLC plug can be loaded with 1 A at maximum. In case the overall sum of the output currents is below 2 A, the supply can only be realised via the four supply contact of the PLC plug. In either case an appropriate fuse has to be provided.

The power supply of the peripherals connected has to be calculated for each individual installation situation. When using a flat ribbon cable, please regard its higher internal resistance!

1 Total current < 2 A
2 Total current > 2 A

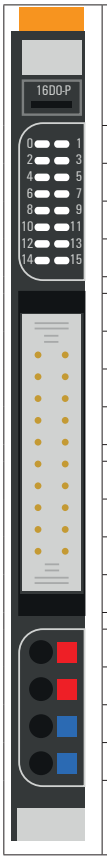

	Module status LED Green: Communication over the system bus Red: Error
0	Yellow: Output 0 active
1	Yellow: Output 1 active
to	to
15	Yellow: Output 15 active
4.1	Green: Supply voltage feed-in plug > 18 V DC
4.2	Red: Error on the supply voltage of the feed-in plug

LED indicators UR20-16DO-P-PLC-INT, troubleshooting see Chapter 12

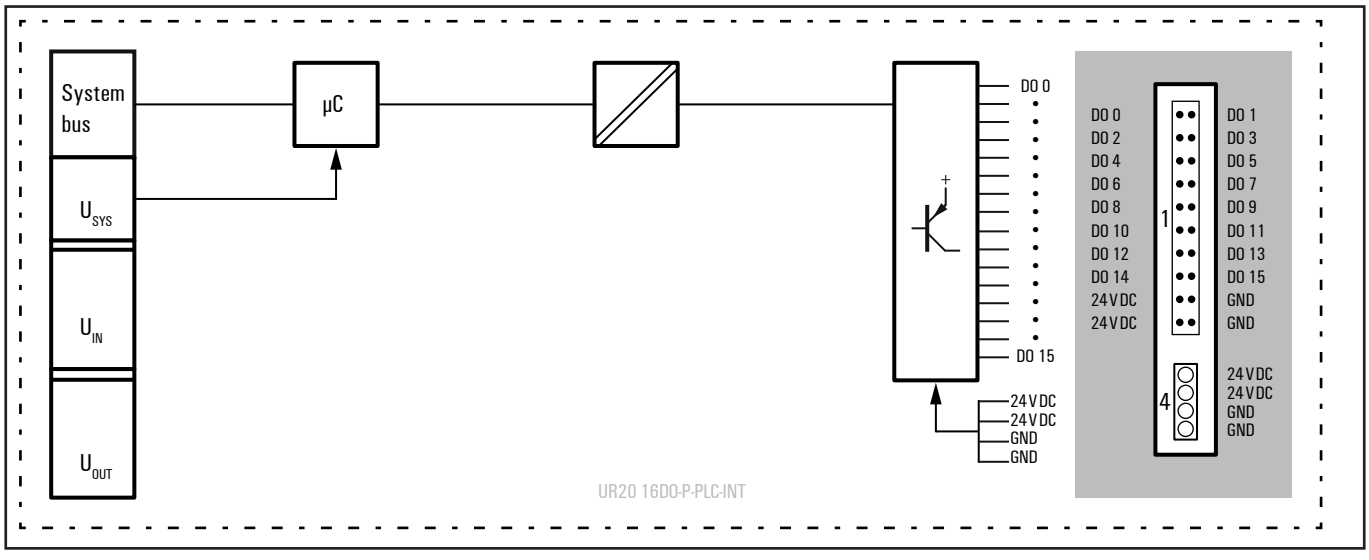

Block diagram UR20-16DO-P-PLC-INT

Technical data UR20-16DO-P-PLC-INT (Item No. 1315270000)

System data		
Data	Process, parameter and diagnostic data depend on the coupler used, see coupler description.	
Interface	u-remote system bus	
System bus transfer rate	48 Mbps	
Outputs		
Number	16	
Type	P-switching	
Type of load	ohmic, inductive, lamp load	
Response time	low » high max. 100 µs; high » low max. 250 µs	
Max. output current	per channel	0.5 A
	per module	8 A (2 A with power supply via a flat ribbon cable)
Breaking energy (inductive)	150 mJ per channel	
Switching frequency	Ohmic load (min. 47 Ω)	1 kHz
	Inductive load (DC 13)	0.2 Hz without free-wheeling diode 1 kHz with suitable free-wheeling diode
	Lamp load (12 W)	1 kHz
Actuator connection	PLC interface unit	
Short-circuit-proof	yes	
Protective circuit	Constant current with thermal switch-off and automatic restart	
Response time of the current limiting circuit	<100 µs	
Module diagnosis	yes	
Individual channel diagnosis	no	
Can be used with PF-O-xDI-SIL	yes	
Supply		
Supply voltage	24 V DC +20 %/-15 %	
Current consumption from system current path I_{SYS}	8 mA	
Current consumption from output current path I_{OUT}	25 mA + load, power supply via feed-in plug or PLC connection	
Connection data		
Type of connection	"PUSH IN"	
Line connection cross-section	Single-wired	0.14 – 1.5 mm² (AWG 16 – 26)
	Fine-wired	0.14 – 1.5 mm² (AWG 16 – 26)
I/O connector	20-pole PLC connection	
General data		
Weight (operational status)	82 g	
For additional general data, see Section 3.4		

Diagnostic data UR20-16DO-P-PLC-INT

Name	Bytes	Bit	Description	Default
Error indicator	0	0	Module error	
		1	Internal error	
		2	External error	
		3	Channel error	0
		4	Error	
		5	Reserved	0
		6	Reserved	0
		7	Parameter error	
Module type	1	0	Module Type	0x0F
		1		
		2		
		3		
		4	Reserved	0
		5	Reserved	0
		6	Reserved	0
		7	Reserved	0
Error byte 2	2	0 ... 7	Reserved	0
Error byte 3	3	0 ... 2	Reserved	0
		3	Internal diagnostic FIFO full	0
		4 ... 7	Reserved	0
Channel type	4	0 ... 6	Channel type	0x72
		7	Reserved	0
Diagnostic bits per channel	5		Number of diagnostic bit per channel	0
Number of channels	6		Number of similar channels per module	0
Channel error	7 ... 10	0 ... 31	Reserved	0
Channel 0 error to Channel 31 error	11 ... 42	0 ... 7	Reserved	0
Time stamp	43-46		time stamp [µs] (32bit)	

Process data[1] outputs UR20-16DO-P-PLC-INT

Byte	Bit	Description
QB0	QX0.0	DO0
	QX0.1	DO1
	QX0.2	DO2
	QX0.3	DO3
	QX0.4	DO4
	QX0.5	DO5
	QX0.6	DO6
	QX0.7	DO7
QB1	QX1.0	DO8
	QX1.1	DO9
	QX1.2	DO10
	QX1.3	DO11
	QX1.4	DO12
	QX1.5	DO13
	QX1.6	DO14
	QX1.7	DO15

1) Internal process data mapping with data format “Standard”. Depending on the fieldbus specification and the data format of the communicating fieldbus components the bytes and/or words can be reversed during data transfer.

6.23 Digital output module UR20-4DO-N

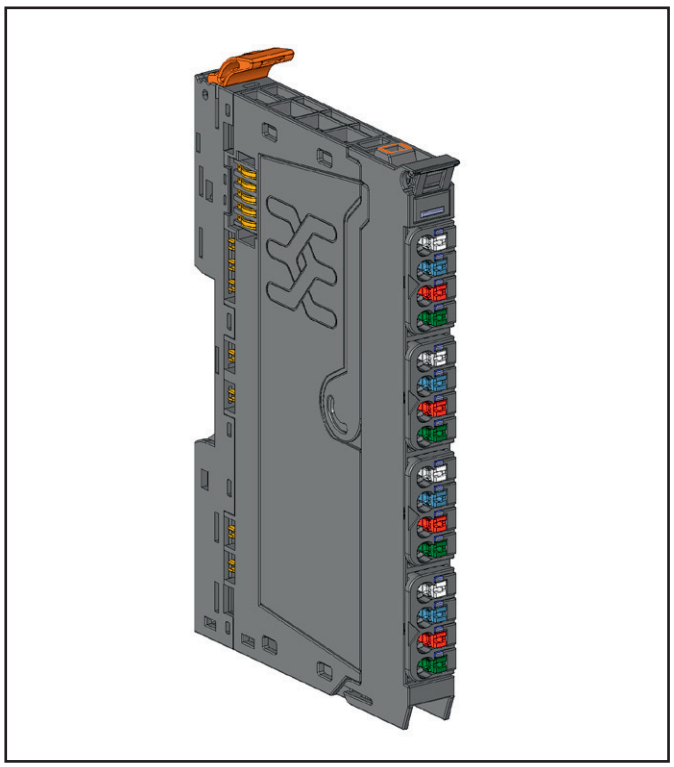

Digital output module UR20-4DO-N (Item No. 1315410000)

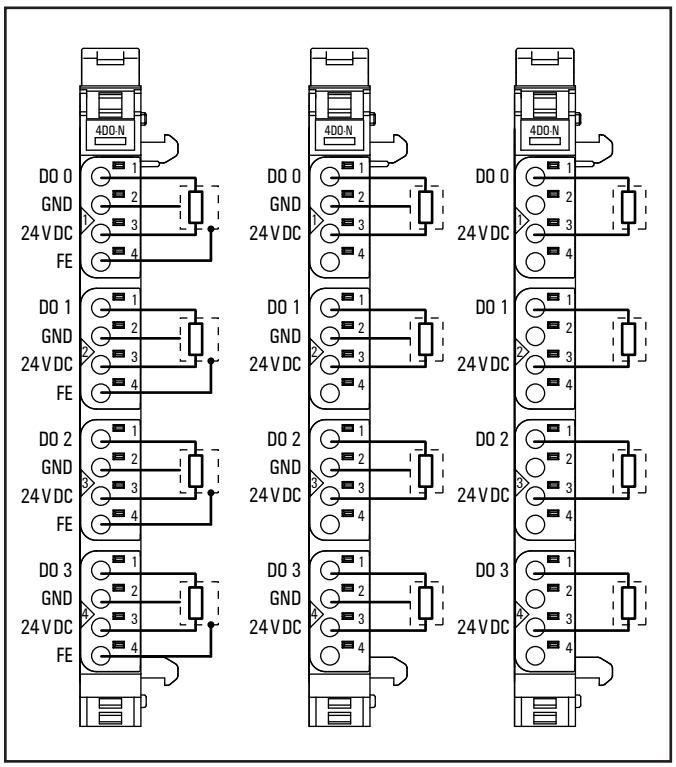

Connection diagram UR20-4DO-N

The UR20-4DO-N digital output module can control up to 4 actuators each with a maximum of 0.5 A. One actuator can be connected to each connector using a 2-wire, 3-wire or 3-wire connection + FE. The outputs are N-switching (sinking). A status LED is assigned to each channel. The outputs are supplied with power from the output current path (I_{OUT}).

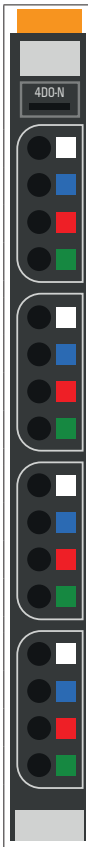

	Module status LED Green: Communication over the system bus Red: Error
1.1	Yellow: Output 0 active
2.1	Yellow: Output 1 active
3.1	Yellow: Output 2 active
4.1	Yellow: Output 3 active

LED indicators UR20-4DO-N, troubleshooting see Chapter 12

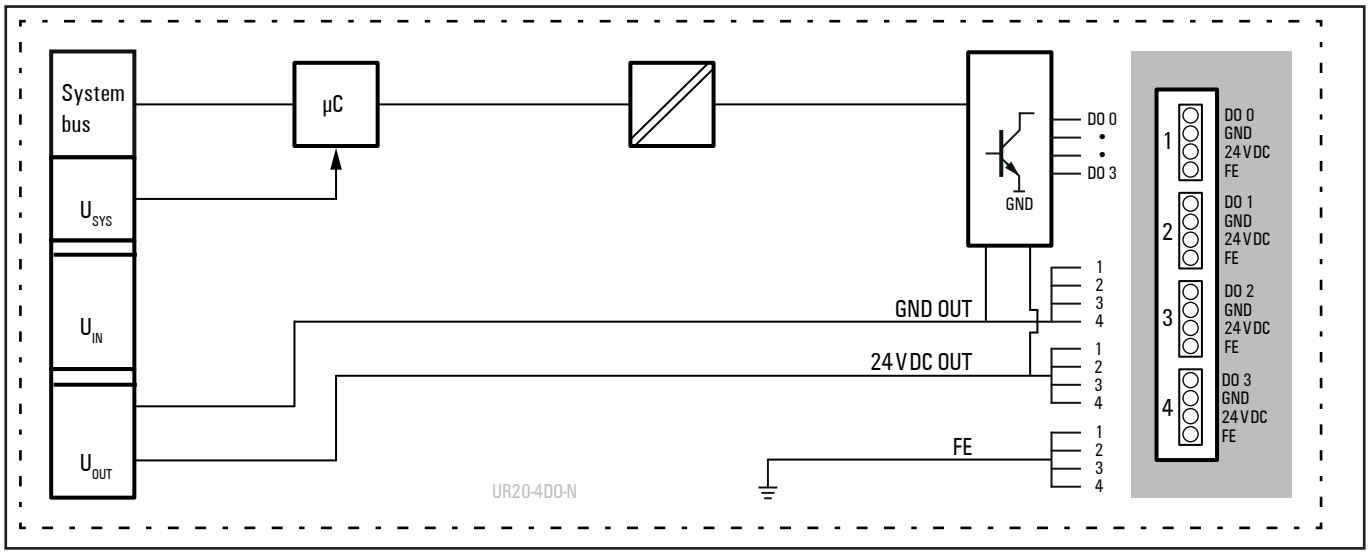

Block diagram UR20-4DO-N

Technical data UR20-4DO-N (Item No. 1315410000)

System data		
Data	Process, parameter and diagnostic data depend on the coupler used, see coupler description.	
Interface	u-remote system bus	
System bus transfer rate	48 Mbps	
Outputs		
Number	4	
Type	N-switching	
Type of load	ohmic, inductive, lamp load	
Response time	low » high max. 100 µs; high » low max. 250 µs	
Max. output current	per channel	0.5 A
	per module	2 A
Breaking energy (inductive)	150 mJ per channel	
Switching frequency	Ohmic load (min. 47 Ω)	1 kHz
	Inductive load (DC 13)	2 Hz without free-wheeling diode 1 kHz with suitable free-wheeling diode
	Lamp load (12 W)	10 Hz
Actuator connection	2-wire, 3-wire, 3-wire + FE	
Actuator supply	max. 2 A per plug, total max. 8 A	
Short-circuit-proof	yes	
Protective circuit	Constant current with thermal switch-off and automatic restart	
Response time of the current limiting circuit	<100 µs	
Module diagnosis	yes	
Individual channel diagnosis	no	
Can be used with PF-O-xDI-SIL	yes	
Supply		
Supply voltage	24 V DC +20 %/-15 %	
Current consumption from system current path I_{SYS}	8 mA	
Current consumption from output current path I_{OUT}	10 mA + load	
General data		
Weight (operational status)	87 g	
For additional general data, see Section 3.4		

Overview of the editable parameter UR20-4DO-N

Channel	Description	Options[1)]	Default
0 ... 3	Substitute value	Off (0) / On (1)	Off

1) Values in brackets for Modbus-TCP (firmware version 02.00.00 and higher), CANopen, EtherCAT and EtherNet/IP via module parameter class

Diagnostic data UR20-4DO-N

Name	Bytes	Bit	Description	Default
Error indicator	0	0	Module error	
		1	Internal error	
		2	External error	
		3	Channel error	0
		4	Error	
		5	Reserved	0
		6	Reserved	0
		7	Parameter error	
Module type	1	0	Module Type	0x0F
		1		
		2		
		3		
		4	Reserved	0
		5	Reserved	0
		6	Reserved	0
		7	Reserved	0
Error byte 2	2	0 ... 7	Reserved	0
Error byte 3	3	0 ... 2	Reserved	0
		3	Internal diagnostic FIFO full	0
		4 ... 7	Reserved	0
Channel type	4	0 ... 6	Channel type	0x72
		7	Reserved	0
Diagnostic bits per channel	5		Number of diagnostic bit per channel	0
Number of channels	6		Number of similar channels per module	4
Channel error	7 ... 10	0 ... 31	Reserved	0
Channel 0 error to Channel 31 error	11 to 42	0 ... 7	Reserved	0
Time stamp	43 ... 46		Time stamp [µs] (32 bit)	

Process data outputs UR20-4DO-N

Byte	Bit	Description
QB0	QX0.0	DO0
	QX0.1	DO1
	QX0.2	DO2
	QX0.3	DO3
	QX0.4	Reserved
	QX0.5	Reserved
	QX0.6	Reserved
	QX0.7	Reserved

6.24 Digital output module UR20-4DO-N-2A

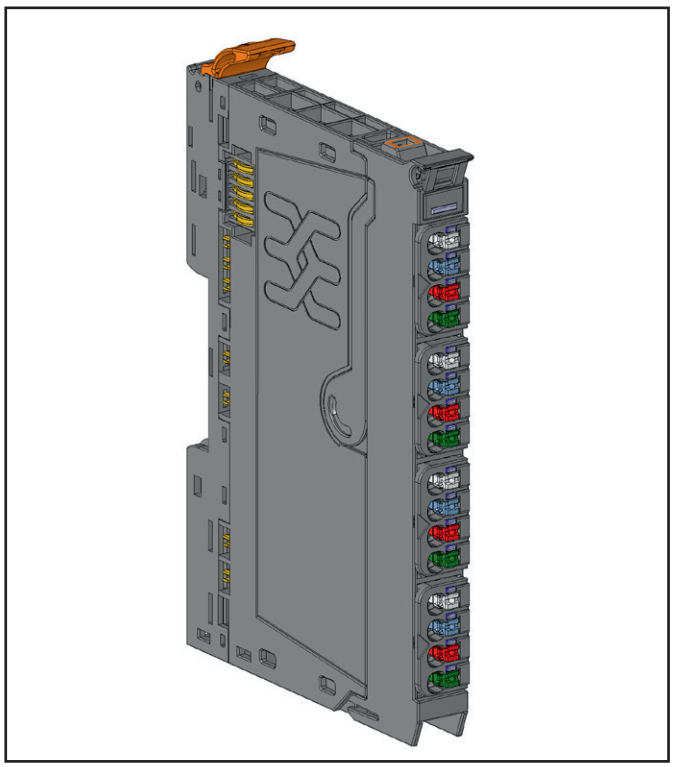

Digital output module UR20-4DO-N-2A (Item No. 1315420000)

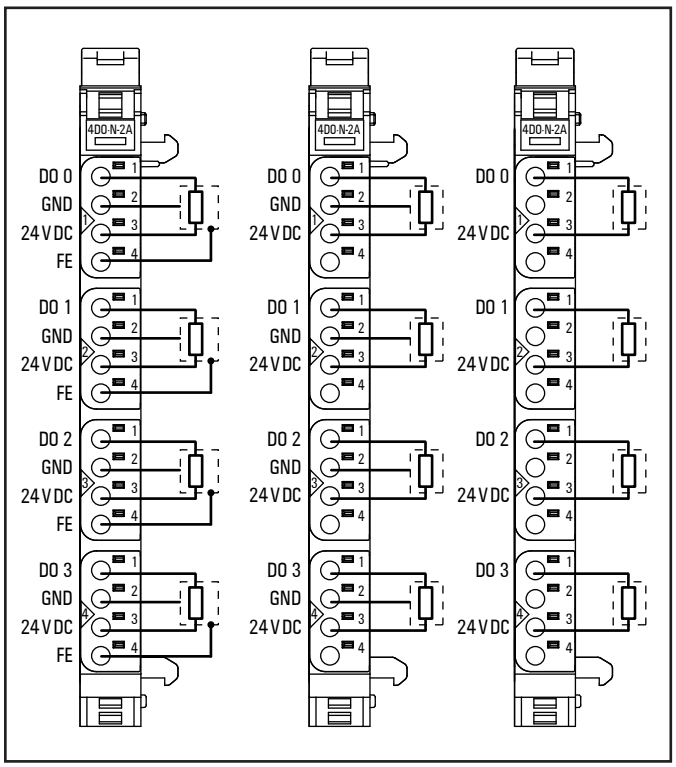

Connection diagram UR20-4DO-N-2A

The digital output module UR20-4DO-N-2A can control up to 4 actuators, each with a maximum of 2 A. One actuator can be connected to each connector using a 2-wire, 3-wire or 3-wire connection + FE. The outputs are N-switching (sinking). A status LED is assigned to each channel. The outputs are supplied with power from the output current path (I_{OUT}).

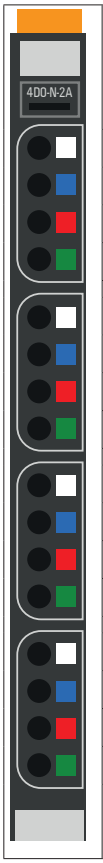

	Module status LED Green: Communication over the system bus Red: Error
1.1	Yellow: Output 0 active
2.1	Yellow: Output 1 active
3.1	Yellow: Output 2 active
4.1	Yellow: Output 3 active

LED indicators UR20-4DO-P-2A, troubleshooting see Chapter 12

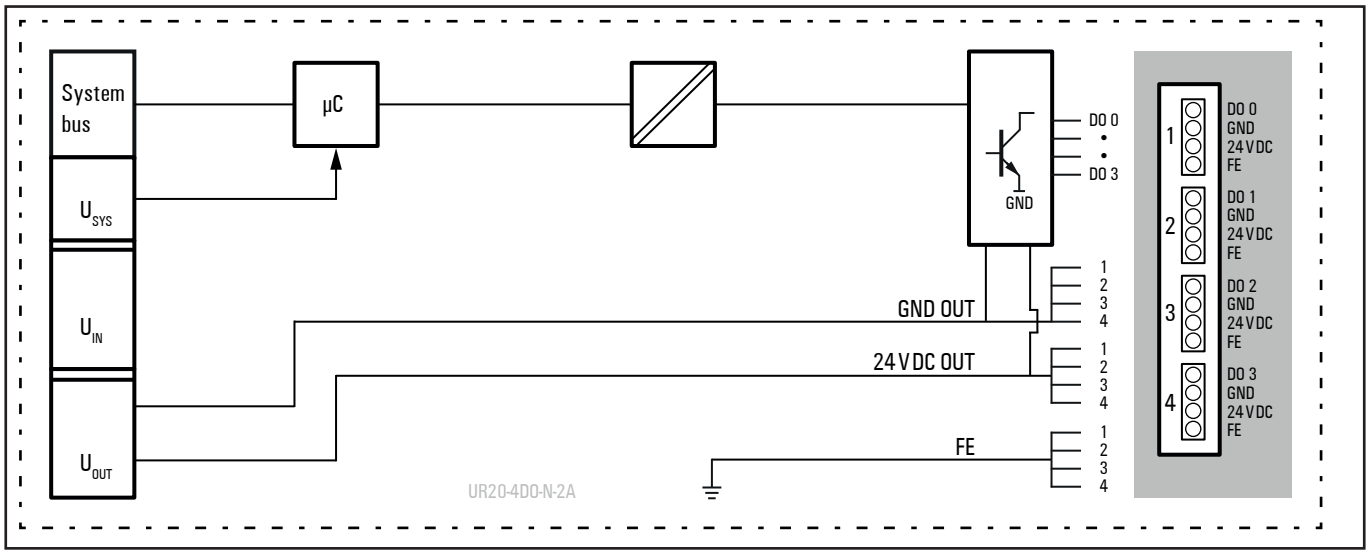

Block diagram UR20-4DO-P-2A

Technical data UR20-4DO-N-2A (Item No. 1315420000)

System data		
Data	Process, parameter and diagnostic data depend on the coupler used, see coupler description.	
Interface	u-remote system bus	
System bus transfer rate	48 Mbps	
Outputs		
Number	4	
Type	N-switching	
Type of load	ohmic, inductive, lamp load	
Response time	low » high max. 100 µs; high » low max. 250 µs	
Max. output current	per channel	2 A
	per module	8 A
Breaking energy (inductive)	150 mJ per channel	
Switching frequency	Ohmic load (min. 47 Ω)	1 kHz
	Inductive load (DC 13)	2 Hz without free-wheeling diode 1 kHz with suitable free-wheeling diode
	Lamp load (48 W)	10 Hz
Actuator connection	2-wire, 3-wire, 3-wire + FE	
Actuator supply	max. 2 A per plug, total max. 8 A	
Short-circuit-proof	yes	
Protective circuit	Constant current with thermal switch-off and automatic restart	
Response time of the current limiting circuit	<100 µs	
Module diagnosis	yes	
Individual channel diagnosis	no	
Can be used with PF-O-xDI-SIL	yes	
Supply		
Supply voltage	24 V DC +20 %/-15 %	
Current consumption from system current path I_{SYS}	8 mA	
Current consumption from output current path I_{OUT}	10 mA + load	
General data		
Weight (operational status)	89 g	
For additional general data, see Section 3.4		

Overview of the editable parameter UR20-4DO-N-2A

Channel	Description	Options[1)]	Default
0 ... 3	Substitute value	Off (0) / On (1)	Off

1) Values in brackets for Modbus-TCP (firmware version 02.00.00 and higher), CANopen, EtherCAT and EtherNet/IP via module parameter class

Diagnostic data UR20-4DO-N-2A

Name	Bytes	Bit	Description	Default
Error indicator	0	0	Module error	
		1	Internal error	
		2	External error	
		3	Channel error	0
		4	Error	
		5	Reserved	0
		6	Reserved	0
		7	Parameter error	
Module type	1	0	Module Type	0x0F
		1		
		2		
		3		
		4	Reserved	0
		5	Reserved	0
		6	Reserved	0
		7	Reserved	0
Error byte 2	2	0 ... 7	Reserved	0
Error byte 3	3	0 ... 2	Reserved	0
		3	Internal diagnostic FIFO full	0
		4 ... 7	Reserved	0
Channel type	4	0 ... 6	Channel type	0x72
		7	Reserved	0
Diagnostic bits per channel	5		Number of diagnostic bit per channel	0
Number of channels	6		Number of similar channels per module	4
Channel error	7 ... 10	0 ... 31	Reserved	0
Channel 0 error to Channel 31 error	11 to 42	0 ... 7	Reserved	0
Time stamp	43 ... 46		Time stamp [µs] (32 bit)	

Process data outputs UR20-4DO-N-2A

Byte	Bit	Description
QB0	QX0.0	DO0
	QX0.1	DO1
	QX0.2	DO2
	QX0.3	DO3
	QX0.4	Reserved
	QX0.5	Reserved
	QX0.6	Reserved
	QX0.7	Reserved

6.25 Digital output module UR20-8DO-N

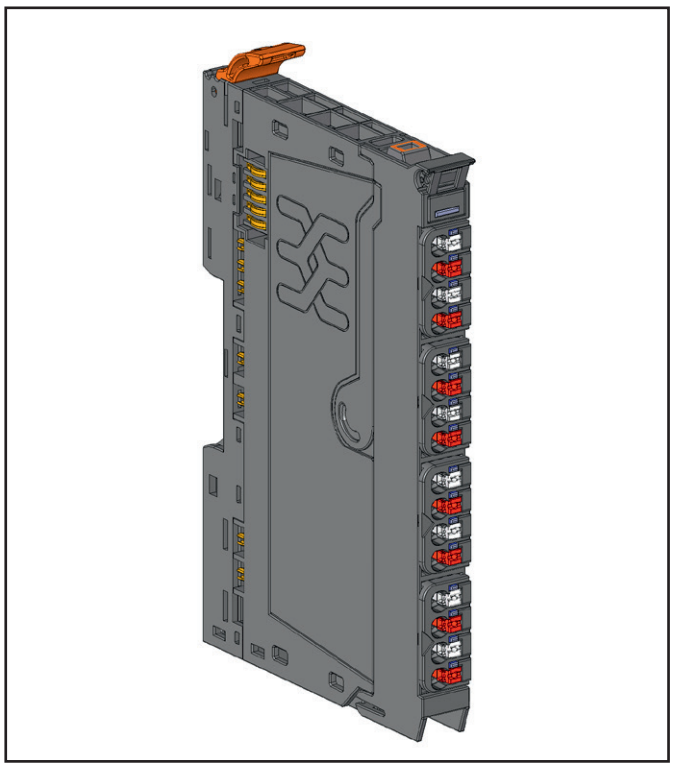

Digital output module UR20-8DO-N (Item No. 1315430000)

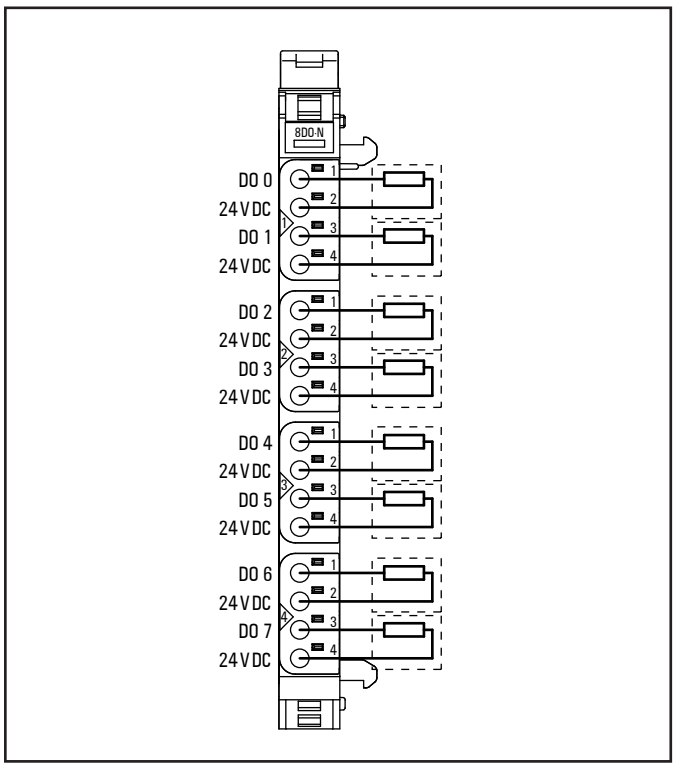

Connection diagram UR20-8DO-N

The UR20-8DO-N digital output module can control up to 8 actuators each with a maximum of 0.5 A. One actuator can be connected to each connector using a 2-wire connection. The outputs are N-switching (sinking). A status LED is assigned to each channel. The outputs are supplied with power from the output current path (I_{OUT}).

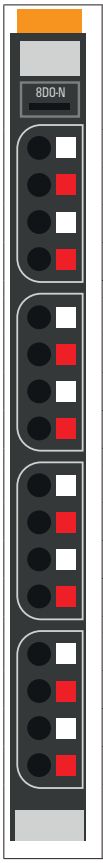

	Module status LED Green: Communication over the system bus Red: Error
1.1	Yellow: Output 0 active
1.3	Yellow: Output 1 active
2.1	Yellow: Output 2 active
2.3	Yellow: Output 3 active
3.1	Yellow: Output 4 active
3.3	Yellow: Output 5 active
4.1	Yellow: Output 6 active
4.3	Yellow: Output 7 active

LED indicators UR20-8DO-N, troubleshooting see Chapter 12

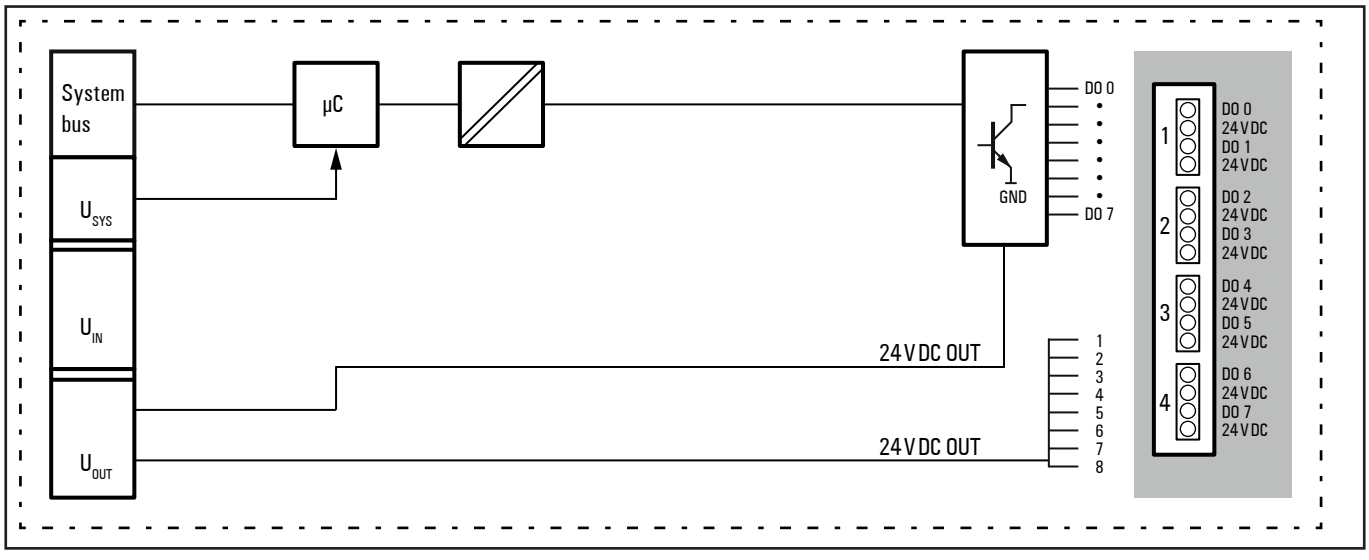

Block diagram UR20-8DO-N

Technical data UR20-8DO-N (Item No. 1315430000)

System data		
Data	Process, parameter and diagnostic data depend on the coupler used, see coupler description.	
Interface	u-remote system bus	
System bus transfer rate	48 Mbps	
Outputs		
Number	8	
Type	N-switching	
Type of load	ohmic, inductive, lamp load	
Response time	low » high max. 100 µs; high » low max. 250 µs	
Max. output current	per channel	0.5 A
	per module	4 A
Breaking energy (inductive)	150 mJ per channel	
Switching frequency	Ohmic load (min. 47 Ω)	1 kHz
	Inductive load (DC 13)	2 Hz without free-wheeling diode 1 kHz with suitable free-wheeling diode
	Lamp load (12 W)	10 Hz
Actuator connection	2-wire	
Short-circuit-proof	yes	
Protective circuit	Constant current with thermal switch-off and automatic restart	
Response time of the current limiting circuit	<100 µs	
Module diagnosis	yes	
Individual channel diagnosis	no	
Can be used with PF-O-xDI-SIL	yes	
Supply		
Supply voltage	24 V DC +20 %/-15 %	
Current consumption from system current path I_{SYS}	8 mA	
Current consumption from output current path I_{OUT}	15 mA + load	
General data		
Weight (operational status)	87 g	
For additional general data, see Section 3.4		

Overview of the editable parameter UR20-8DO-N

Channel	Description	Options[1)]	Default
0 ... 7	Substitute value	Off (0) / On (1)	Off

1) Values in brackets for Modbus-TCP (firmware version 02.00.00 and higher), CANopen, EtherCAT and EtherNet/IP via module parameter class

Diagnostic data UR20-8DO-N

Name	Bytes	Bit	Description	Default
Error indicator	0	0	Module error	
		1	Internal error	
		2	External error	
		3	Channel error	0
		4	Error	
		5	Reserved	0
		6	Reserved	0
		7	Parameter error	
Module type	1	0	Module Type	0x0F
		1		
		2		
		3		
		4	Reserved	0
		5	Reserved	0
		6	Reserved	0
		7	Reserved	0
Error byte 2	2	0 ... 7	Reserved	0
Error byte 3	3	0 ... 2	Reserved	0
		3	Internal diagnostic FIFO full	0
		4 ... 7	Reserved	0
Channel type	4	0 ... 6	Channel type	0x72
		7	Reserved	0
Diagnostic bits per channel	5		Number of diagnostic bit per channel	0
Number of channels	6		Number of similar channels per module	8
Channel error	7 ... 10	0 ... 31	Reserved	0
Channel 0 error to Channel 31 error	11 ... 42	0 ... 7	Reserved	0
Time stamp	43-46		time stamp [µs] (32bit)	

Process data outputs UR20-8DO-N

Byte	Bit	Description
QB0	QX0.0	DO0
	QX0.1	DO1
	QX0.2	DO2
	QX0.3	DO3
	QX0.4	DO4
	QX0.5	DO5
	QX0.6	DO6
	QX0.7	DO7

6.26 Digital output module UR20-16DO-N

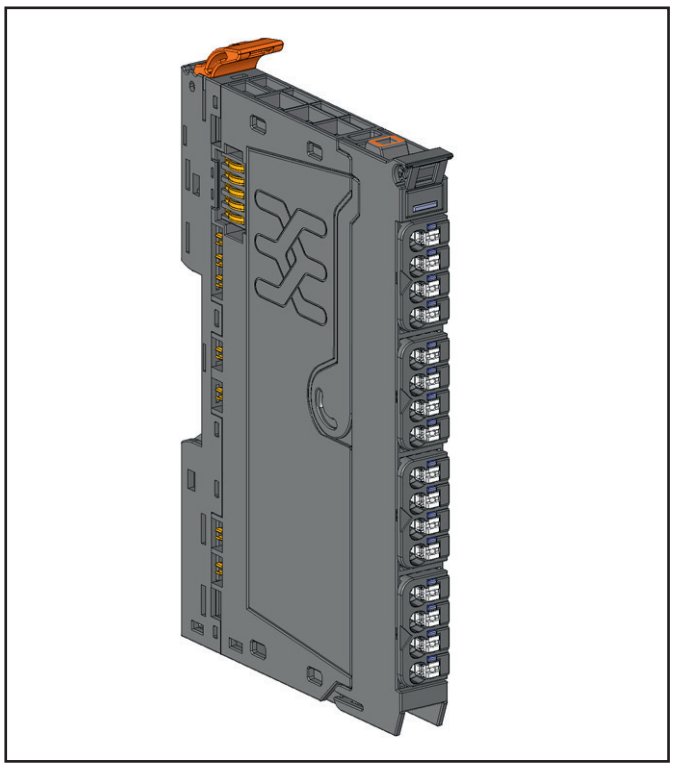

Digital output module UR20-16DO-N (Item No. 1315440000)

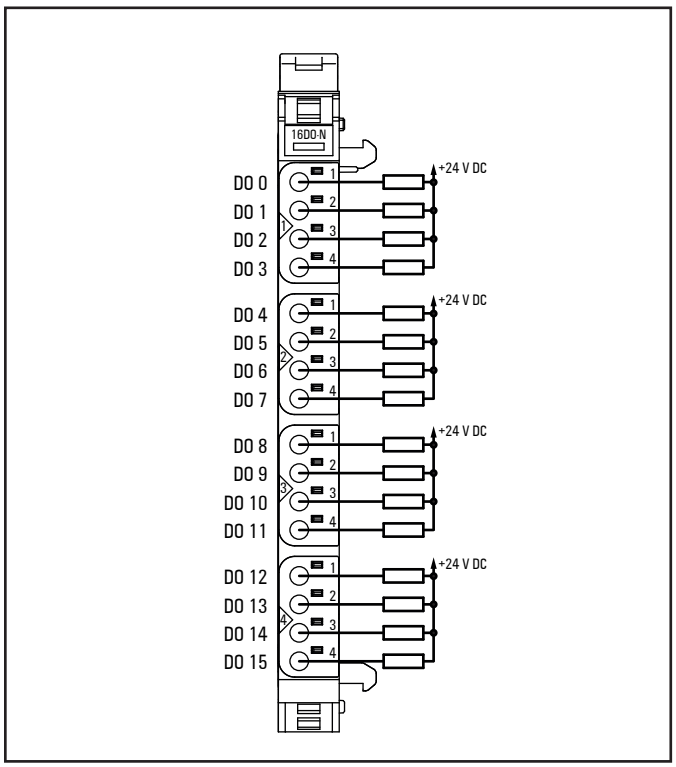

Connection diagram UR20-16DO-N

The UR20-16DO-N digital output module can control up to 16 actuators each with a maximum of 0.5 A. Four actuators can be connected to each connector. The outputs are N-switching. A status LED is assigned to each channel. The outputs are supplied with power from the output current path (I_{OUT}).



	Module status LED Green: Communication over the system bus Red: Error
1.1	Yellow: Output 0 active
1.2	Yellow: Output 1 active
1.3	Yellow: Output 2 active
1.4	Yellow: Output 3 active
2.1	Yellow: Output 4 active
2.2	Yellow: Output 5 active
2.3	Yellow: Output 6 active
2.4	Yellow: Output 7 active
3.1	Yellow: Output 8 active
3.2	Yellow: Output 9 active
3.3	Yellow: Output 10 active
3.4	Yellow: Output 11 active
4.1	Yellow: Output 12 active
4.2	Yellow: Output 13 active
4.3	Yellow: Output 14 active
4.4	Yellow: Output 15 active

LED indicators UR20-16DO-N, troubleshooting see Chapter 12

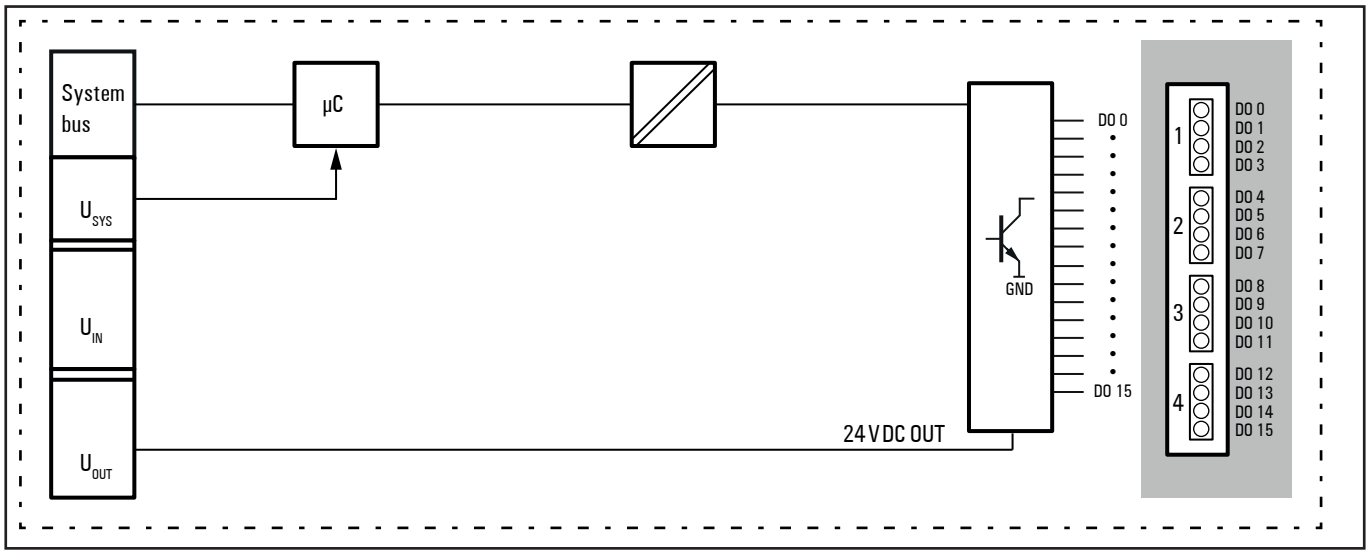

Block diagram UR20-16DO-N

Technical data UR20-16DO-N (Item No. 1315440000)

System data		
Data	Process, parameter and diagnostic data depend on the coupler used, see coupler description.	
Interface	u-remote-Systembus	
System bus transfer rate	48 MBit/s	
Outputs		
Number	16	
Type	N-switching	
Type of load	ohmic, inductive, lamp load	
Response time	low » high max. 100 µs; high » low max. 250 µs	
Max. output current	per channel	0.5 A
	per module	8 A
Breaking energy (inductive)	150 mJ per channel	
Switching frequency	Ohmic load (min. 47 Ω)	1 kHz
	Inductive load (DC 13)	0.2 Hz without free-wheeling diode 1 kHz with suitable free-wheeling diode
	Lamp load (12 W)	10 Hz
Actuator connection	1-wire	
Short-circuit-proof	yes	
Protective circuit	Constant current with thermal switch-off and automatic restart	
Response time of the current limiting circuit	< 100 µs	
Module diagnosis	yes	
Individual channel diagnosis	no	
Can be used with PF-O-xDI-SIL	yes	
Supply		
Supply voltage	24 V DC +20 %/-15 %	
Current consumption from system current path I_{SYS}	8 mA	
Current consumption from output current path I_{OUT}	30 mA + load	
General data		
Weight (operational status)	89 g	
For additional general data, see Section 3.4		

Diagnostic data UR20-16DO-N

Name	Byte	Bit	Description	Default
Error indicator	0	0	Module error	
		1	Internal error	
		2	External error	
		3	Channel error	0
		4	Error	
		5	Reserved	0
		6	Reserved	0
		7	Parameter error	
Module type	1	0	Module Type	0x0F
		1		
		2		
		3		
		4	Reserved	0
		5	Reserved	0
		6	Reserved	0
		7	Reserved	0
Error byte 2	2	0 ... 7	Reserved	0
Error byte 3	3	0 ... 2	Reserved	0
		3	Internal diagnostic FIFO full	0
		4 ... 7	Reserved	0
Channel type	4	0 ... 6	Channel type	0x72
		7	Reserved	0
Diagnostic bits per channel	5		Number of diagnostic bit per channel	0
Number of channels	6		Number of similar channels per module	0
Channel error	7 ... 10	0 ... 31	Reserved	0
Channel 0 error to Channel 31 error	11 ... 42	0 ... 7	Reserved	0
Time stamp	43-46		time stamp [µs] (32bit)	

Process data[1] outputs UR20-16DO-N

Byte	Bit	Description
QB0	QX0.0	DO0
	QX0.1	DO1
	QX0.2	DO2
	QX0.3	DO3
	QX0.4	DO4
	QX0.5	DO5
	QX0.6	DO6
	QX0.7	DO7
QB1	QX1.0	DO8
	QX1.1	DO9
	QX1.2	DO10
	QX1.3	DO11
	QX1.4	DO12
	QX1.5	DO13
	QX1.6	DO14
	QX1.7	DO15

1) Internal process data mapping with data format “Standard”. Depending on the fieldbus specification and the data format of the communicating fieldbus components the bytes and/or words can be reversed during data transfer.

6.27 Digital output module UR20-16DO-N-PLC-INT

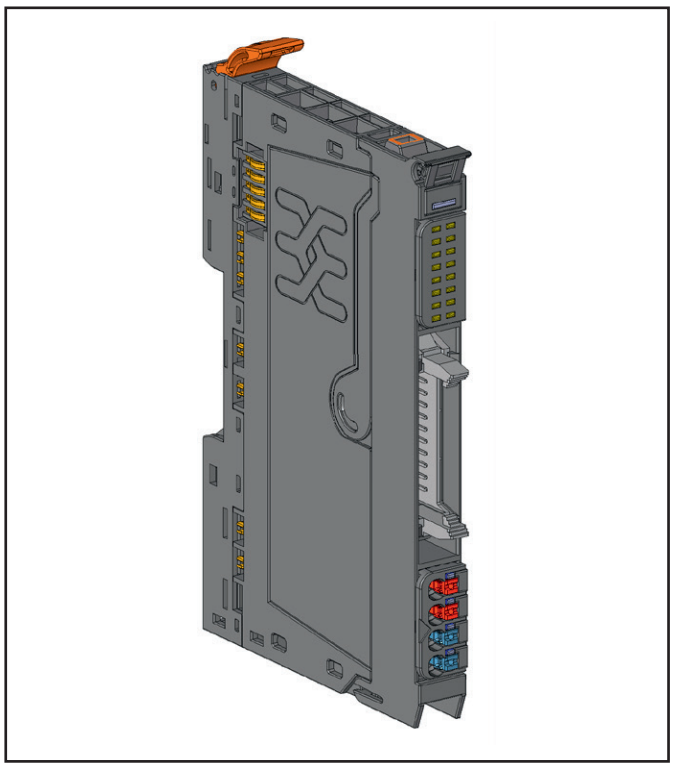

Digital output module UR20-16DO-N-PLC-INT (Item No. 1315450000)

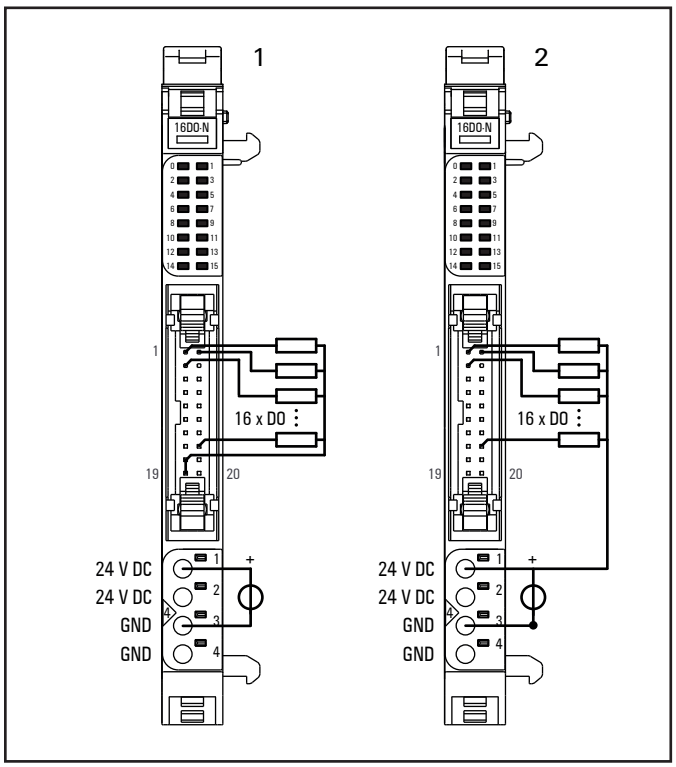

Connection diagram UR20-16DO-N-PLC-INT

The digital output module UR20-16DO-N-PLC-INT can control up to 16 actuators each with a maximum of 0.5 A. The actuators are connected via a 20-pole PLC connection. The outputs are N-switching. A status LED is assigned to each channel in a separate block.

The module as well as the actuators are supplied by one of both plugs. Each contact of the PLC connection can be loaded with 1 A at maximum. In case the overall sum of the output currents is below 2 A, the supply can only be realised via the four supply contact of the PLC plug. In either case an appropriate fuse has to be provided.

The power supply of the peripherals connected has to be calculated for each individual installation situation. When using a flat ribbon cable, please regard its higher internal resistance!

Make sure that there is no potential difference between the voltage supply and the output path of the station.

1 Total current < 2 A
2 Total current > 2 A

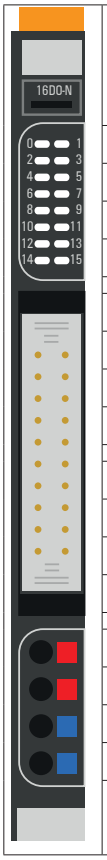

	Module status LED Green: Communication over the system bus Red: Error
0	Yellow: Output 0 active
1	Yellow: Output 1 active
...	to
15	Yellow: Output 15 active
4.1	Green: Supply voltage feed-in plug > 18 V DC
4.2	Red: Error on the supply voltage of the feed-in plug

LED indicators UR20-16DO-N-PLC-INT, troubleshooting see Chapter 12

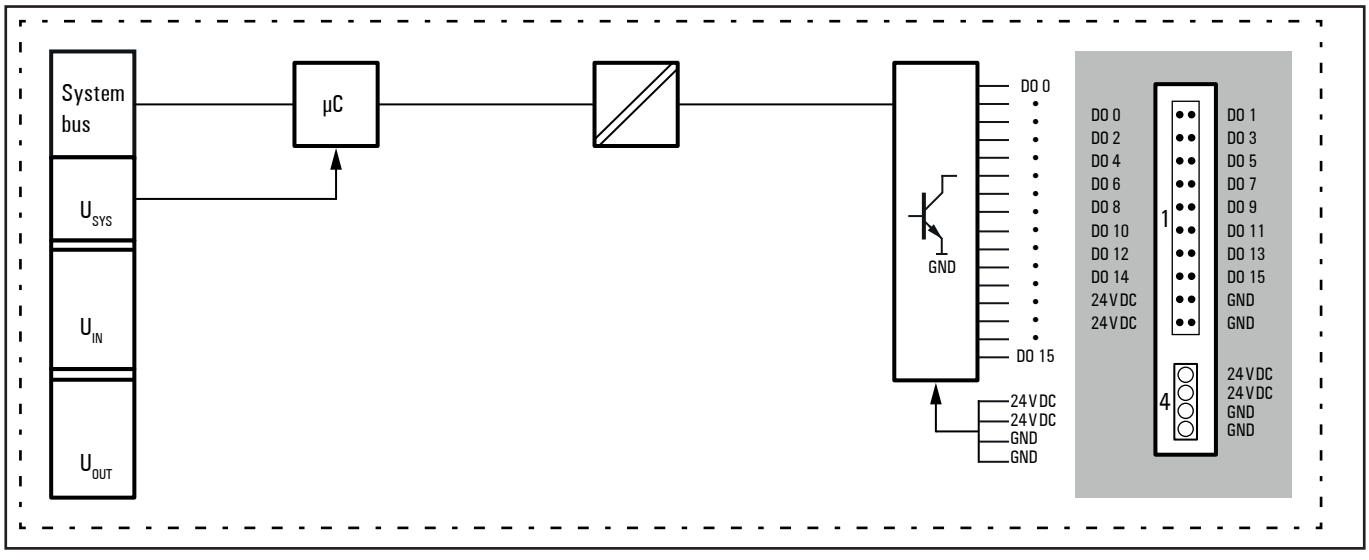

Block diagram UR20-16DO-N-PLC-INT

Technical data UR20-16DO-N-PLC-INT (Item No. 1315450000)

System data		
Data	Process, parameter and diagnostic data depend on the coupler used, see coupler description.	
Interface	u-remote system bus	
System bus transfer rate	48 Mbps	
Outputs		
Number	16	
Type	N-switching	
Type of load	ohmic, inductive, lamp load	
Response time	low » high max. 100 µs; high » low max. 250 µs	
Max. output current	per channel	0.5 A
	per module	8 A (2 A with power supply via a flat ribbon cable)
Breaking energy (inductive)	150 mJ per channel	
Switching frequency	Ohmic load (min. 47 Ω)	1 kHz
	Inductive load (DC 13)	0.2 Hz without free-wheeling diode 1 kHz with suitable free-wheeling diode
	Lamp load (12 W)	10 Hz
Actuator connection	PLC interface unit	
Short-circuit-proof	yes	
Protective circuit	Constant current with thermal switch-off and automatic restart	
Response time of the current limiting circuit	< 100 µs	
Module diagnosis	yes	
Individual channel diagnosis	no	
Can be used with PF-O-xDI-SIL	yes	
Supply		
Supply voltage	24 V DC +20 %/-15 %	
Current consumption from system current path I_{SYS}	8 mA	
Current consumption from output current path I_{OUT}	30 mA + load, power supply via feed-in plug or PLC connection	
Connection data		
Type of connection	„PUSH IN“	
Line connection cross-section	Single-wired	0.14 … 1.5 mm² (AWG 16 … 26)
	Fine-wired	0.14 … 1.5 mm² (AWG 16 … 26)
I/O connector	20-pole PLC connection	
General data		
Weight (operational status)	83 g	
For additional general data, see Section 3.4		

Diagnostic data UR20-16DO-N-PLC-INT

Name	Byte	Bit	Description	Default
Error indicator	0	0	Module error	
		1	Internal error	
		2	External error	
		3	Channel error	0
		4	Error	
		5	Reserved	0
		6	Reserved	0
		7	Parameter error	
Module type	1	0	Module Type	0x0F
		1		
		2		
		3		
		4	Reserved	0
		5	Reserved	0
		6	Reserved	0
		7	Reserved	0
Error byte 2	2	0 ... 7	Reserved	0
Error byte 3	3	0 ... 2	Reserved	0
		3	Internal diagnostic FIFO full	0
		4 ... 7	Reserved	0
Channel type	4	0 ... 6	Channel type	0x72
		7	Reserved	0
Diagnostic bits per channel	5		Number of diagnostic bit per channel	0
Number of channels	6		Number of similar channels per module	0
Channel error	7 ... 10	0 ... 31	Reserved	0
Channel 0 error to Channel 31 error	11 ... 42	0 ... 7	Reserved	0
Time stamp	43-46		Time stamp [µs] (32bit)	

Process data[1] outputs UR20-16DO-N-PLC-INT

Byte	Bit	Description
QB0	QX0.0	DO0
	QX0.1	DO1
	QX0.2	DO2
	QX0.3	DO3
	QX0.4	DO4
	QX0.5	DO5
	QX0.6	DO6
	QX0.7	DO7
QB1	QX1.0	DO8
	QX1.1	DO9
	QX1.2	DO10
	QX1.3	DO11
	QX1.4	DO12
	QX1.5	DO13
	QX1.6	DO14
	QX1.7	DO15

1) Internal process data mapping with data format “Standard”. Depending on the fieldbus specification and the data format of the communicating fieldbus components the bytes and/or words can be reversed during data transfer.

6.28 Digital output module UR20-4DO-ISO-4A

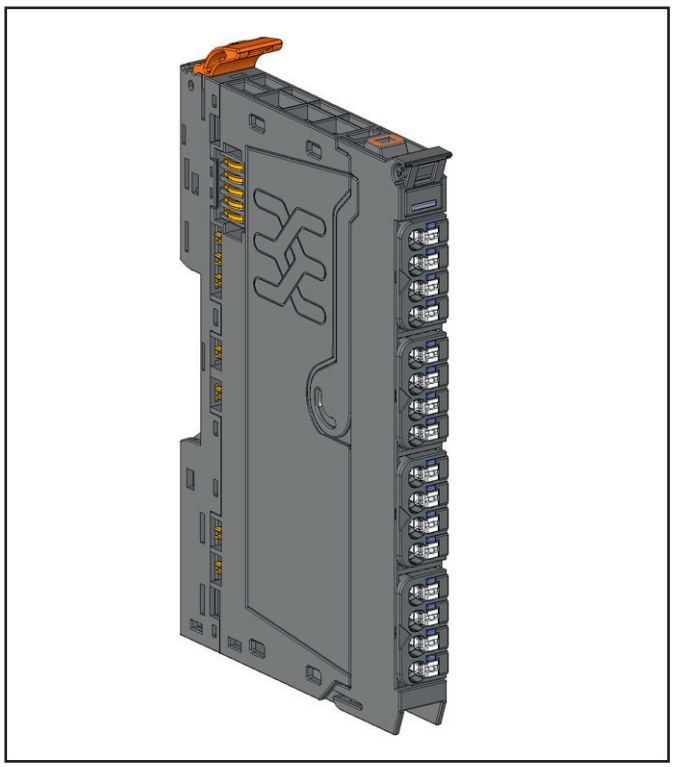

Digital output module UR20-4DO-ISO-4A (Item No. 2457250000)

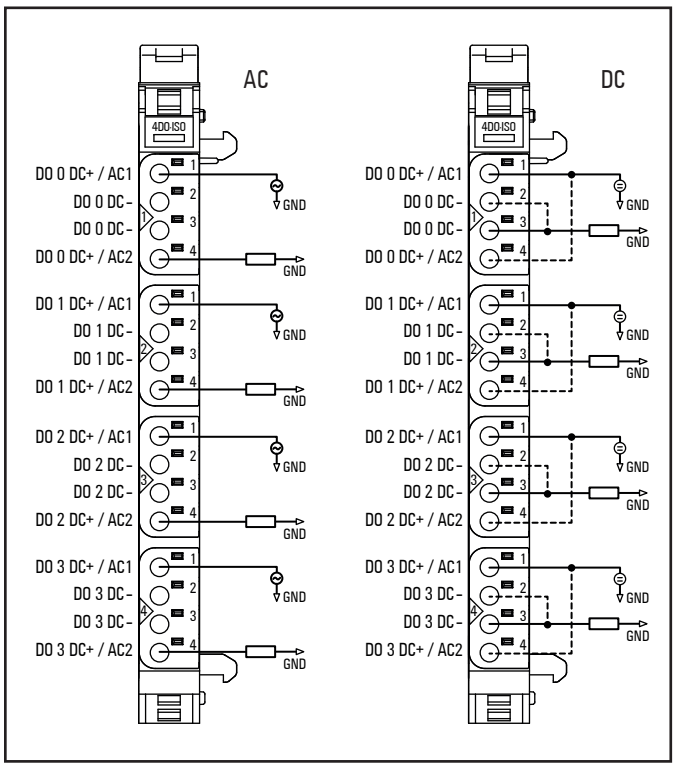

Connection diagram UR20-4DO-ISO-4A

The UR20-4DO-ISO-4A digital output module can control up to 4 actuators each with a maximum of 4 A DC or 2 A AC via the 4 outputs. The outputs are insulated from each other and from the system supply. One actuator can be connected to each connector using a 2-wire connection. A status LED is assigned to each channel. The switching voltage of max. 48 V DC or 24 V AC can be supplied externally for each channel.

Please regard the error behaviour of this module: Outputs that have been switched off are not automatically switched on again but have to be activated again (e.g. by a command from the controller).

The module can be switched off by a PF-O-xDI-SIL module, but it does not fulfil the requirements for safe disconnection and is therefore not suitable for use in safety-related applications.

The wiring must be realised using both DC+ and both DC– connectors when connecting DC loads that exceed 2 A.



	Module status LED Green: Communication over the system bus Red: Error
1.1	Yellow: Output 0 active
1.2	Red: Error channel 0
2.1	Yellow: Output 1 active
2.2	Red: Error channel 1
3.1	Yellow: Output 2 active
3.2	Red: Error channel 2
4.1	Yellow: Output 3 active
4.2	Red: Error channel 3

LED indicators UR20-4DO-ISO-4A, troubleshooting see Chapter 12

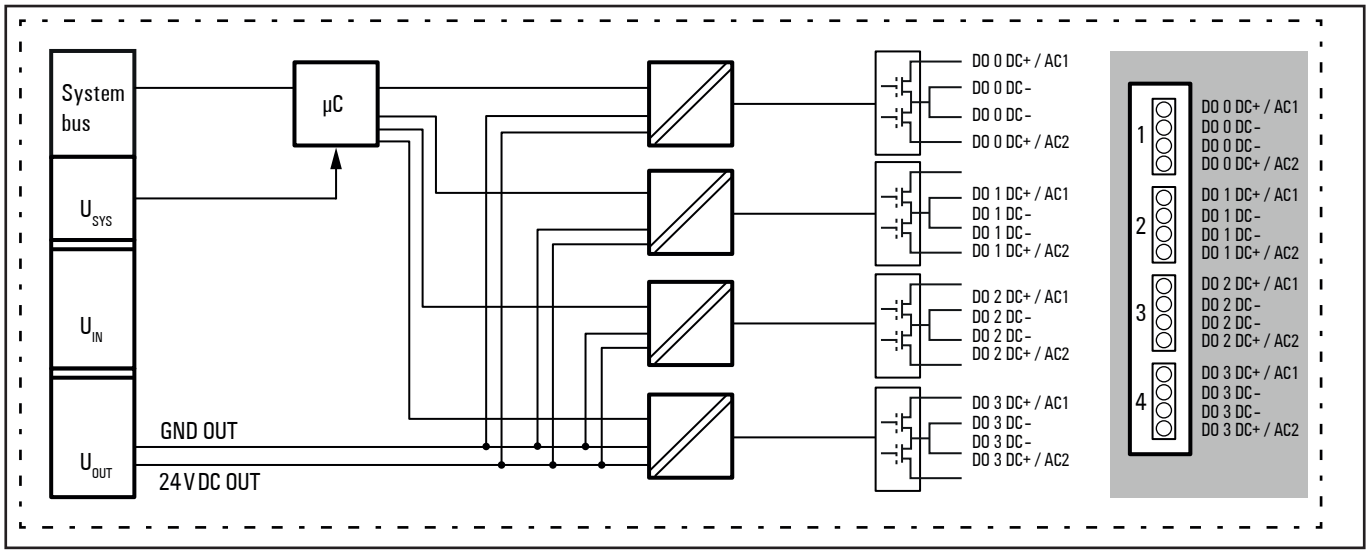

Block diagram UR20-4DO-ISO-4A

Technical data UR20-4DO-ISO-4A (Item No. 2457250000)

System data		
Data	Process, parameter and diagnostic data depend on the coupler used, see coupler description.	
Interface	u-remote system bus	
System bus transfer rate	48 Mbps	
Outputs		
Number	4	
Type of load	ohmic, inductive, lamp load	
Response time	low » high max. 250 µs; high » low max. 250 µs	
Max. output current	per channel	4 A DC / 2 A AC
	per module	16 A DC / 8 A AC
Output voltage	max. 48 V DC / max. 24 V AC	
Switching frequency	Ohmic load	1 kHz
	Inductive load (DC 13)	0,2 Hz with suitable free-wheeling diode
	Lamp load	10 Hz
Actuator connection	2-wire	
Short-circuit-proof	yes	
Protective circuit	In case of short circuit: immediate switch-off In case of overload: thermic switch-off Restart only after command from the control	
Response time of the current limiting circuit	<100 µs	
Isolation	500 V (channel to channel), 500 V (channel to supply voltage)	
Module diagnosis	yes	
Individual channel diagnosis	no	
Can be used with PF-O-xDI-SIL	no	
Supply		
Supply voltage	24 V DC +20 %/-15 %	
Current consumption from system current path I_{SYS}	8 mA	
Current consumption from output current path I_{OUT}	<46 mA	
General data		
Weight (operational status)	91 g	
For additional general data, see Section 3.4		

Overview of the editable parameter UR20-4DO-ISO-4A

Channel	Description	Options[1)]	Default
0 ... 3	Substitute value	Off (0) / On (1)	Off

1) Values in brackets for Modbus-TCP (firmware version 02.00.00 and higher) and EtherCAT

Diagnostic data UR20-4DO-ISO-4A

Name	Bytes	Bit	Description	Default
Error indicator	0	0	Module error	
		1	Internal error	
		2	External error	
		3	Channel error	0
		4	Error	
		5	Reserved	0
		6	Reserved	0
		7	Parameter error	
Module type	1	0	Module Type	0x0F
		1		
		2		
		3		
		4	Reserved	0
		5	Reserved	0
		6	Reserved	0
		7	Reserved	0
Error byte 2	2	0 ... 7	Reserved	0
Error byte 3	3	0 ... 2	Reserved	0
		3	Internal diagnostic FIFO full	0
		4 ... 7	Reserved	0
Channel type	4	0 ... 6	Channel type	0x72
		7	Reserved	0
Diagnostic bits per channel	5		Number of diagnostic bit per channel	0
Number of channels	6		Number of similar channels per module	4
Channel error	7 ... 10	0 ... 31	Reserved	0
Channel 0 error to Channel 31 error	11 ... 42	0 ... 7	Reserved	0
Time stamp	43-46		time stamp [µs] (32bit)	

Process data outputs UR20-4DO-ISO-4A

Byte	Bit	Description
QB0	QX0.0	DO0
	QX0.1	DO1
	QX0.2	DO2
	QX0.3	DO3
	QX0.4	Reserved
	QX0.5	Reserved
	QX0.6	Reserved
	QX0.7	Reserved

6.29 Universal digital input and output module UR20-8DIO-P-3W-DIAG

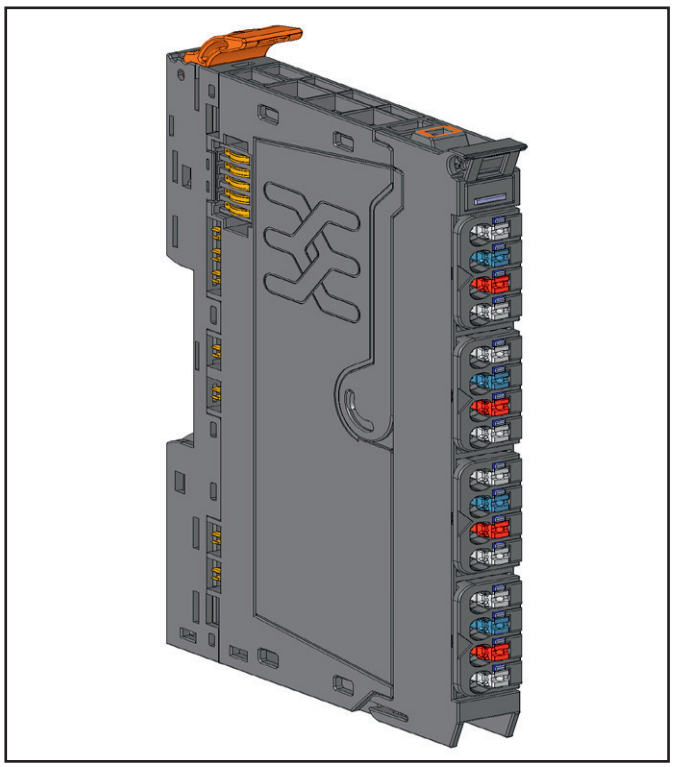

Digital I/O module UR20-8DIO-P-3W-DIAG (Order No. 2456530000)

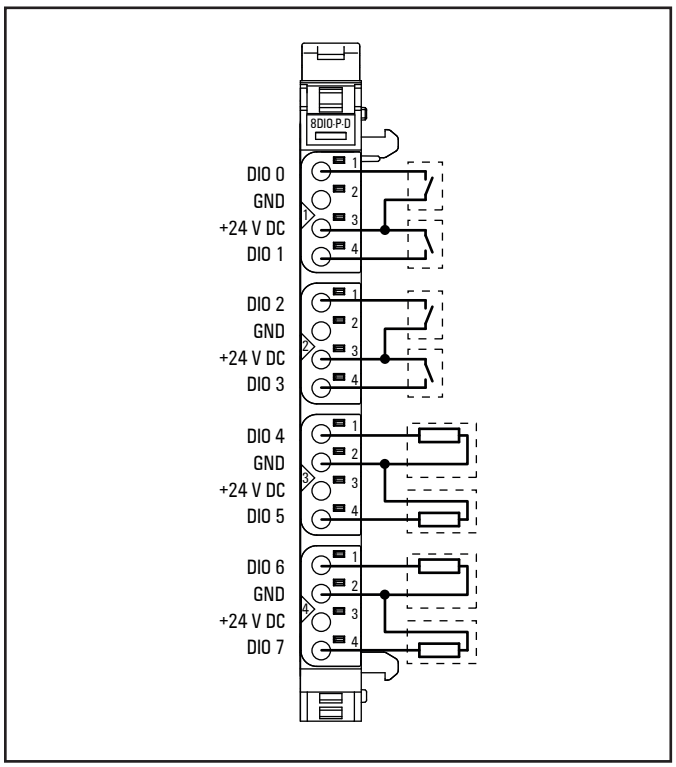

Connection diagram UR20-8DIO-P-3W-DIAG (Example: 4 inputs, 4 outputs)

Each of the eight channels of the digital I/O module UR20-8DIO-P-3W-DIAG can be configured to be an input or an output. A status LED is assigned to each channel. Up to two sensors or actuators can be connected to each connector using a 2-wire or 3-wire connection.

The digital inputs are specified 24 V DC type 1 and 3 as per IEC 61131-2. The sensor supply is limited to 0.3 A per connector and fused by a self-resetting fuse. The individual channel diagnosis monitors the sensor supply for overcurrent >0.3 A.

The individual channel diagnosis monitors switched outputs for overload and unswitched outputs for load (line break detection). The outputs have a maximum output current of 0.5 A at 24 V DC and they are short-circuit-proof. An output will only be switched if the output voltage is below the line break detection threshold (see technical data).

The module electronics supply the connected sensors and actuators with power from the output current path (I_{OUT}).

ATTENTION

The module can be destroyed!

The input voltage must be above -10 V otherwise the module can be destroyed.

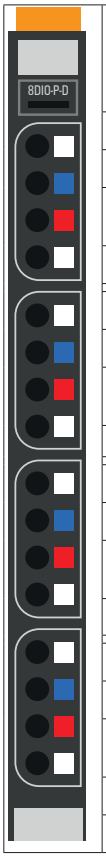

	Module status LED Green: Communication over the system bus Red: Error
1.1	Yellow: Status DI/DO channel 0
1.2	Red: Overload or no load (line break) output 0
1.3	Red: Overload of sensor supply connector 1 or overload or no load (line break) output 1
1.4	Yellow: Status DI/DO channel 1
2.1	Yellow: Status DI/DO channel 2
2.2	Red: Overload or no load (line break) output 2
2.3	Red: Overload of sensor supply connector 2 or overload or no load (line break) output 3
2.4	Yellow: Status DI/DO channel 3
3.1	Yellow: Status DI/DO channel 4
3.2	Red: Overload or no load (line break) output 4
3.3	Red: Overload of sensor supply connector 3 or overload or no load (line break) output 5
3.4	Yellow: Status DI/DO channel 5
4.1	Yellow: Status DI/DO channel 6
4.2	Red: Overload or no load (line break) output 6
4.3	Red: Overload of sensor supply connector 4 or overload or no load (line break) output 7
4.4	Yellow: Status DI/DO channel 7

LED indicators UR20-8DIO-P-3W-DIAG, troubleshooting see Chapter 12

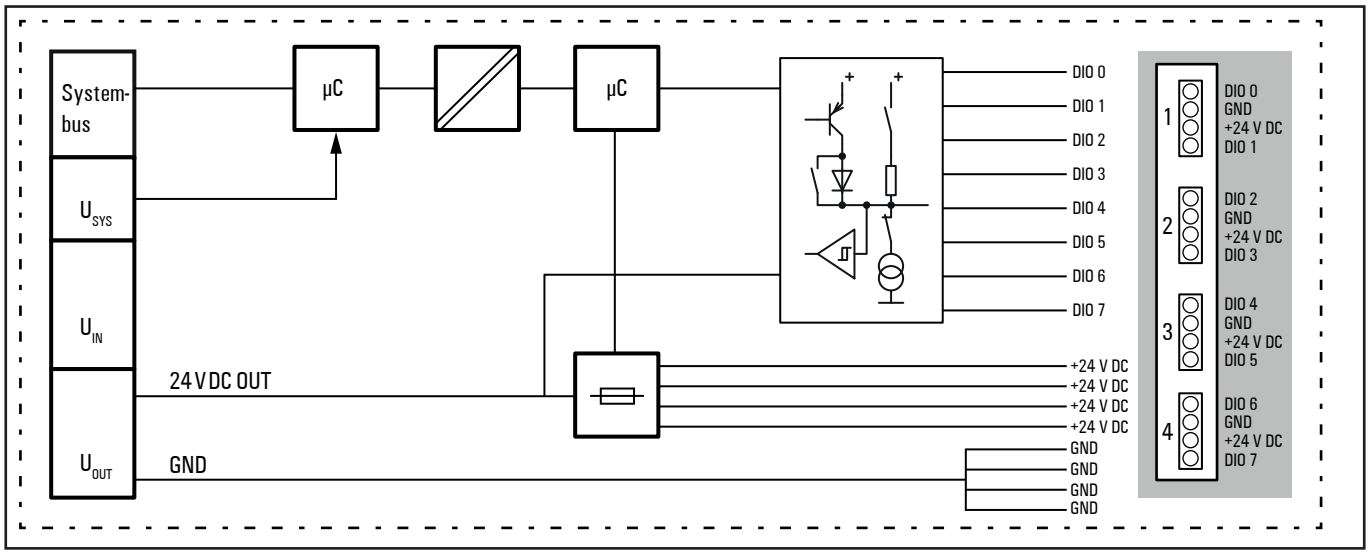

Block diagram UR20-8DIO-P-3W-DIAG

Technical data UR20-8DIO-P-3W-DIAG (Order No. 2456530000)

System data		
Data	Process, parameter and diagnostic data depend on the coupler used, see coupler description.	
Interface	u-remote system bus	
System bus transfer rate	48 Mbps	
Inputs		
Number	8	
Input type	P-switching, for Type 1 and Type 3 sensors as per IEC 61131-2	
Input filter	Input delay adjustable from 0 to 40 ms	
Low input voltage	< + 5 V referred to 0 V of the output power supply U_{OUT}	
High input voltage	> + 11 V referred to 0 V of the output power supply U_{OUT}	
Sensor supply	≤ 0.3 A per connector; limited electronically	
Protective circuit	Constant current with thermal switch-off and automatic restart	
Sensor connection	2-wire, 3-wire	
Reverse polarity protection	no, input voltage below -10 V can destroy the module	
Module diagnosis	yes	
Individual channel diagnosis	only auxiliary voltage output	
Outputs		
Number	8	
Type	P-switching	
Type of load	ohmic, inductive, lamp load	
Response time	typ. 120 µs	
Max. output current	per channel	0.5 A
	per module	4 A
Breaking energy (inductive)	150 mJ per channel	
Switching frequency	Ohmic load (min. 47 Ω)	1 kHz
	Inductive load (DC 13)	0.2 Hz without free-wheeling diode 1 kHz with suitable free-wheeling diode
	Lamp load (12 W)	10 Hz
Actuator connection	2-wire, 3-wire	
Actuator supply	see sensor supply	
Short-circuit-proof	yes	
Protective circuit	constant current with thermal switch-off and automatic restart	
Response time of the current limiting circuit	<100 µs	
Module diagnosis	yes	
Individual channel diagnosis	yes, overcurrent monitoring > 0.5 A, line break detection	
Line break detection	Threshold typ. 3.3 V (load resistance > 6 kΩ)	
Can be used with PF-O-xDI-SIL	yes	

Technical data UR20-8DIO-P-3W-DIAG (Order No. 2456530000)

Supply	
Supply voltage	24 V DC +20 %/-15 %
Current consumption from system current path I_{SYS}	8 mA
Current consumption from output current path I_{OUT}	34 mA + sensor supply + load
General data	
Weight (operational status)	90 g
For additional general data, see Section 3.4	

Overview of the editable parameters UR20-8DIO-P-3W-DIAG

Channel	Description	Options[1]	Default
0 ... 7	I/O modus	Input (0) / Output (1)	Input
0 ... 7	Input delay	no (0) / 0.5 ms (1) / 3 ms (2) / 10 ms (3) / 20 ms (4) / 40 ms (5)	3 ms
0 ... 7	Substitute value	Off (0) / On (1)	Off
0 ... 7	Channel diagnosis	disabled (0) / enabled (1)	disabled

1) Values in brackets for Modbus-TCP (firmware version 02.00.00 and higher), CANopen, EtherCAT and EtherNet/IP via module parameter class

Process data inputs UR20-8DIO-P-3W-DIAG

Byte	Bit	Description
IB0	IX0.0	DI0
	IX0.1	DI1
	IX0.2	DI2
	IX0.3	DI3
	IX0.4	DI4
	IX0.5	DI5
	IX0.6	DI6
	IX0.7	DI7

Process data outputs UR20-8DIO-P-3W-DIAG

Byte	Bit	Description
QB0	QX0.0	DO0
	QX0.1	DO1
	QX0.2	DO2
	QX0.3	DO3
	QX0.4	DO4
	QX0.5	DO5
	QX0.6	DO6
	QX0.7	DO7

Process data and line break detection

I/O mode		Process data		Line break detection active
	Connection	Output	Input	
	DIOx	QX0.x	IX0.x	
Input	U >11 V	irrelevant	1	no
Input	U < 5 V	irrelevant	0	no
Output	Load	0	0	yes
Output	Line break U>3.3 V	0	1	yes[1]
Output	Load	1	1	no
Output	Line break[2] U>3.3 V	1	1	no

1) An internal pull-up resistor pulls the connection to High level.
2) The output will not switch on, if a line break has been detected.

Line break detection is not active at an output that has ben set. In this case a set input bit can mean the state “Line break” or the state “Output is set”.

Diagnostic data UR20-8DIO-P-3W-DIAG

Name	Byte	Bit	Description	Default
Error indicator	0	0	Module error	
		1	Internal error	
		2	External error	
		3	Channel error	0
		4	Error	
		5	Power supply fault	
		6	Reserved	0
		7	Parameter error	
Module type	1	0	Module Type	0x15
		1		
		2		
		3		
		4	Reserved	0
		5	Reserved	0
		6	Reserved	0
		7	Reserved	0
Error byte 2	2	0 ... 7	Reserved	0
Error byte 3	3	0 ... 2	Reserved	0
		3	Internal diagnostic FIFO full	
		4	Power supply fault	
		5 ... 7	Reserved	0
Channel type	4	0 ... 6	Channel type	0x74
		7	Reserved	0
Diagnostic bits per channel	5		Number of diagnostic bit per channel	8
Number of channels	6		Number of similar channels per module	8
Channel error	7	0	Error at channel 0	
		...	...	
		7	Error at channel 7	
Channel error	8 ... 10	0 ... 7	Reserved	0
Error channel 0	11	0	Parameter error	
		1	Output overload	
		2 ... 3	Reserved	0
		4	Line break output	
		5 ... 7	Reserved	0
Error channel 1	12	0	Parameter error	
		1	Output overload	
		2	Reserved	0
		3	Sensor supply overload connector 1	
		4	Line break output	
		5 ... 7	Reserved	0
Error channel 2	13	0	Parameter error	
		1	Output overload	
		2 ... 3	Reserved	
		4	Line break output	
		5 ... 7	Reserved	

Diagnostic data UR20-8DIO-P-3W-DIAG

Name	Byte	Bit	Description	Default
Error channel 3	14	0	Parameter error	
		1	Output overload	
		2	Reserved	0
		3	Sensor supply overload connector 2	
		4	Line break output	
		5 ... 7	Reserved	0
Error channel 4	15	0	Parameter error	
		1	Output overload	
		2 ... 3	Reserved	0
		4	Line break output	
		5 ... 7	Reserved	0
Error channel 5	16	0	Parameter error	
		1	Output overload	
		2	Reserved	0
		3	Sensor supply overload connector 3	
		4	Line break output	
		5 ... 7	Reserved	0
Error channel 6	17	0	Parameter error	
		1	Output overload	
		2 ... 3	Reserved	
		4	Line break output	
		5 ... 7	Reserved	
Error channel 7	18	0	Parameter error	
		1	Output overload	
		2	Reserved	0
		3	Sensor supply overload connector 4	
		4	Line break output	
		5 ... 7	Reserved	0
Error channel 8 ... Error channel 31	19 ... 42	0 ... 7	Reserved	0
Time stamp	43-46		time stamp [µs] (32bit)	

6.30 Digital output module UR20-4RO-SSR-255

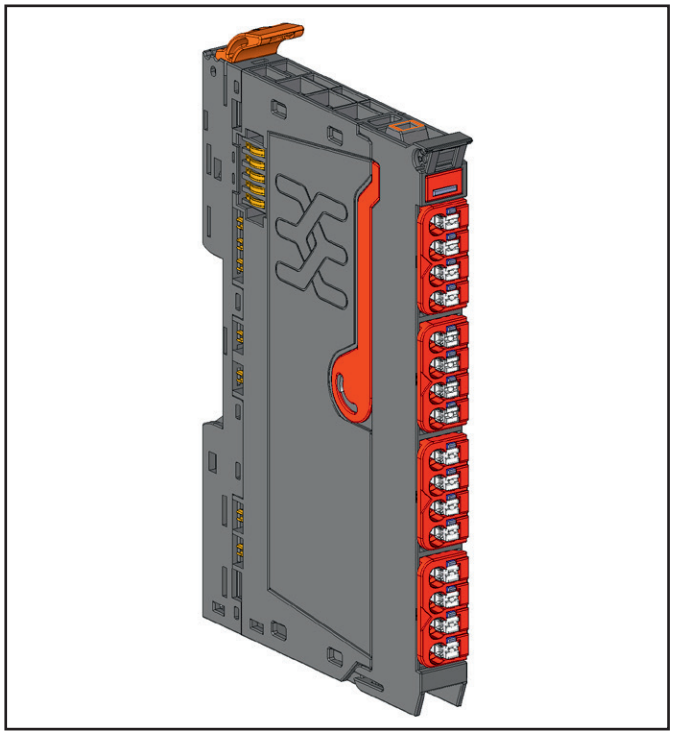

Digital output module UR20-4RO-SSR-255 (Item No. 1315540000)

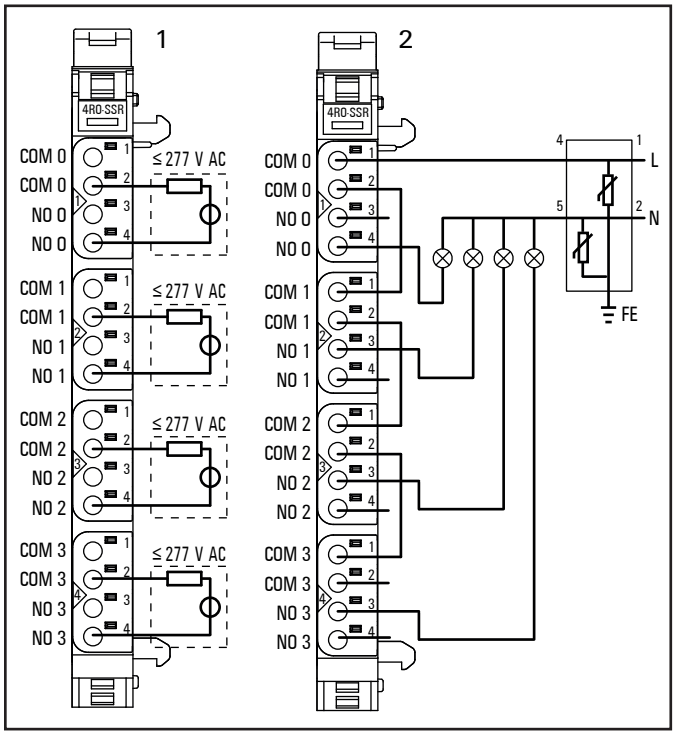

Connection diagram UR20-4RO-SSR-255

The digital output module UR20-4RO-SSR-255 uses four semiconductor switches to control up to 4 actuators, each with a maximum of 1 A at 255 V AC. The switching characteristics of the semiconductor switch have it as being closed when the voltage crosses zero and open when the current crosses zero. Each connector features a potential-free NO contact (Normally Open). A status LED is assigned to each channel.

For the protection against extreme disturbance level use surge protection terminals with varistor (see connection diagram 2), e.g. VSSC6 MOV 240 V AC/DC, Item No. 1064630000.

ATTENTION

When using output modules UR20-4RO-SSR-255 in explosive atmosphere:

- The device shall be installed in an environment free of condensation, corrosives and conducting dusts.
- If the switching or input voltage exceeds 63 V, a transient protection device shall be provided that limits the transients to a peak voltage of 500 V or less.

ATTENTION

The module can be destroyed by a hot swap.

► Make sure that the input contacts are voltage-free before carrying out a hot swap of the electronic unit.



	Module status LED Green: Communication over the system bus Red: Error
1.1	Yellow: Output 0 active
2.1	Yellow: Output 1 active
3.1	Yellow: Output 2 active
4.1	Yellow: Output 3 active

LED indicators UR20-4RO-SSR-255, troubleshooting see Chapter 12

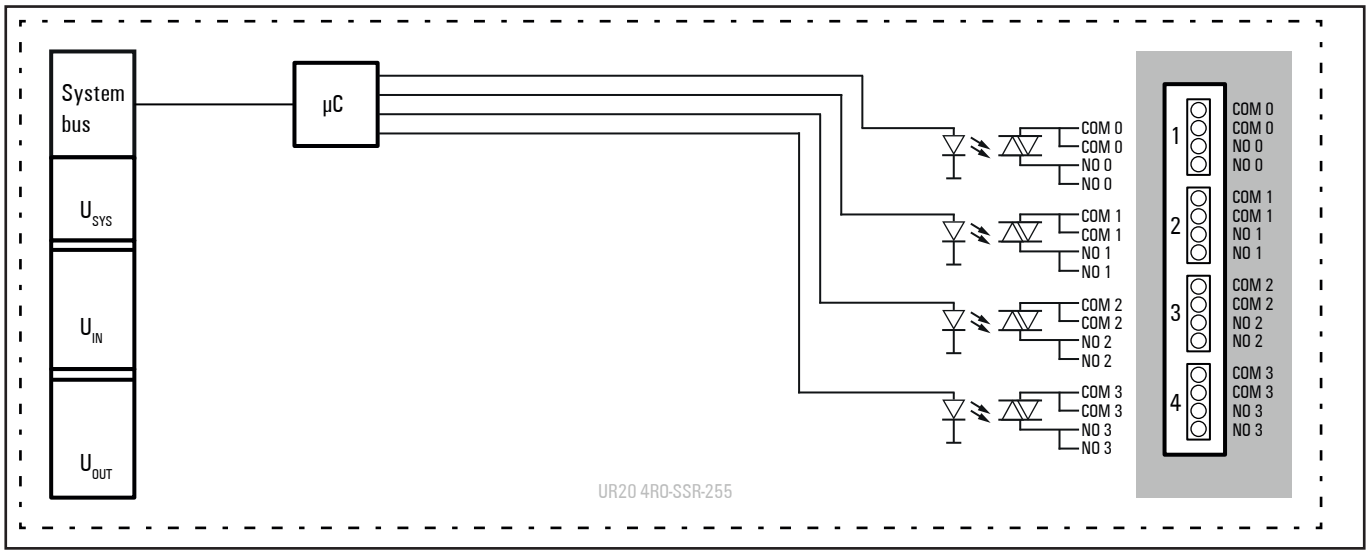

Block diagram UR20-4RO-SSR-255

Technical data UR20-4RO-SSR-255 (Item No. 1315540000)

System data		
Data	Process, parameter and diagnostic data depend on the coupler used, see coupler description.	
Interface	u-remote system bus	
System bus transfer rate	48 Mbps	
Outputs		
Number	4	
Type	SSR / triac	
Switching characteristic	closing when the voltage crosses zero, opening when the current crosses zero	
Response time	10 ms	
Minimum switching current	per channel	50 mA
Maximum switching current	per channel	1 A
	per module	4 A
Holding current	25 mA	
Installation	external surge protection circuit recommended for overvoltage category II and III	
Switching frequency	up to 20 Hz	
Short-circuit-proof	no	
Defined trip behaviour of the prescribed external fuse	1 A super quick-acting	
Module diagnosis	yes	
Individual channel diagnosis	no	
Max. switching voltage	255 V AC, UL: 277 V AC	
Can be used with PF-O-xDI-SIL	no	
Supply		
Supply voltage	24 V DC +20 %/-15 %	
Current consumption from system current path I_{SYS}	8 mA	
General data		
Weight (operational status)	83 g	
For additional general data, see Section 3.4		

Overview of the editable parameter UR20-4RO-SSR-255

Channel	Description	Options[1)]	Default
0 ... 3	Substitute value	Off (0) / On (1)	Off

1) Values in brackets for Modbus-TCP (firmware version 02.00.00 and higher), CANopen, EtherCAT and EtherNet/IP via module parameter class

Diagnostic data UR20-4RO-SSR-255

Name	Bytes	Bit	Description	Default
Error indicator	0	0	Module error	
		1	Internal error	
		2	External error	
		3	Channel error	0
		4	Error	
		5	Reserved	0
		6	Reserved	0
		7	Parameter error	
Module type	1	0	Module Type	0x0F
		1		
		2		
		3		
		4	Reserved	0
		5	Reserved	0
		6	Reserved	0
		7	Reserved	0
Error byte 2	2	0 ... 7	Reserved	0
Error byte 3	3	0 ... 2	Reserved	0
		3	Internal diagnostic FIFO full	0
		4 ... 7	Reserved	0
Channel type	4	0 ... 6	Channel type	0x72
		7	Reserved	0
Diagnostic bits per channel	5		Number of diagnostic bit per channel	0
Number of channels	6		Number of similar channels per module	4
Channel error	7 ... 10	0 ... 31	Reserved	0
Channel 0 error to Channel 31 error	11 ... 42	0 ... 7	Reserved	0
Time stamp	43-46		time stamp [µs] (32bit)	

Process data outputs UR20-4RO-SSR-255

Byte	Bit	Description
QB0	QX0.0	DO0
	QX0.1	DO1
	QX0.2	DO2
	QX0.3	DO3
	QX0.4	Reserved
	QX0.5	Reserved
	QX0.6	Reserved
	QX0.7	Reserved

6.31 Digital relay output module UR20-4RO-CO-255

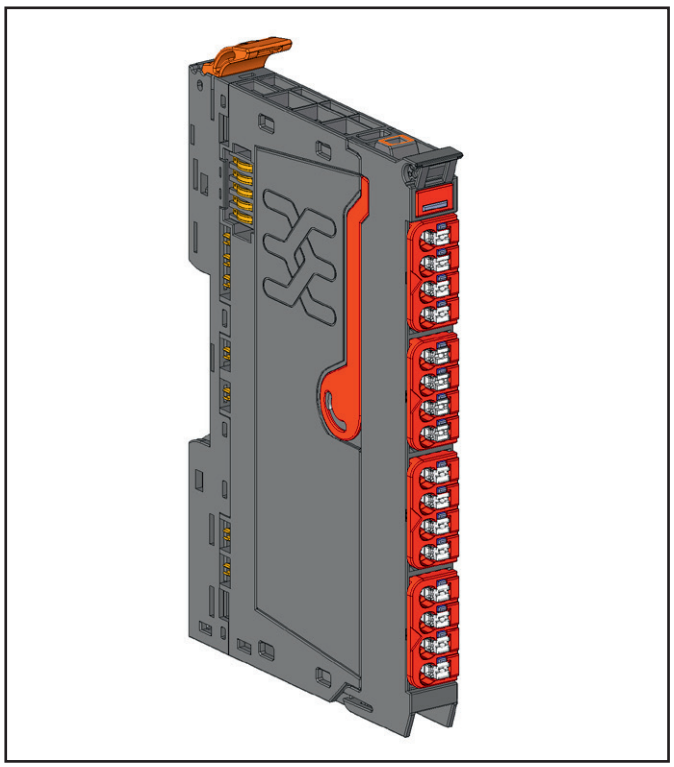

Digital relay output module UR20-4RO-CO-255 (Item No. 1315550000)

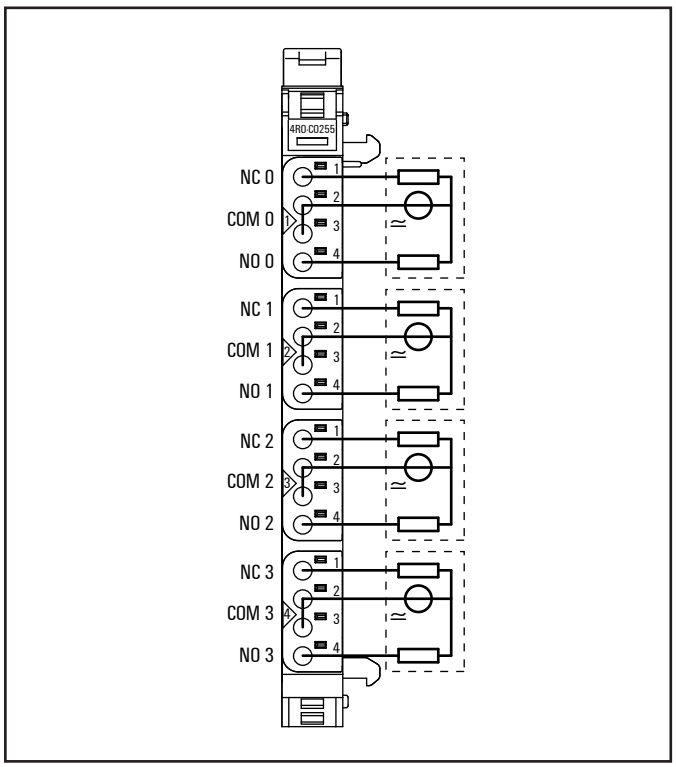

Connection diagram UR20-4RO-CO-255

The digital relay output module UR20-4RO-CO-255 can control up to 4 actuators each with a maximum of 6 A. Each connector features a potential-free changeover contact. A status LED is assigned to each channel. The relay coils are supplied with power from the output current path (I_{OUT}).

ATTENTION

When using relay modules UR20-4RO-CO-255 in explosive atmosphere:

- The device shall be installed in an environment free of condensation, corrosives and conducting dusts.
- If the switching or input voltage exceeds 63 V, a transient protection device shall be provided that limits the transients to a peak voltage of 500 V or less.
- Due to the fact that relays are subject to wear, it must be ensured that the temperature do not exceed the limits of temperature class T4. A contact resistance of more than 110 mΩ will be considered as a fault.
- The modules may only be charged with resistive loads.

ATTENTION

The module can be destroyed by a hot swap.

► Make sure that the input contacts are voltage-free before carrying out a hot swap of the electronic unit.

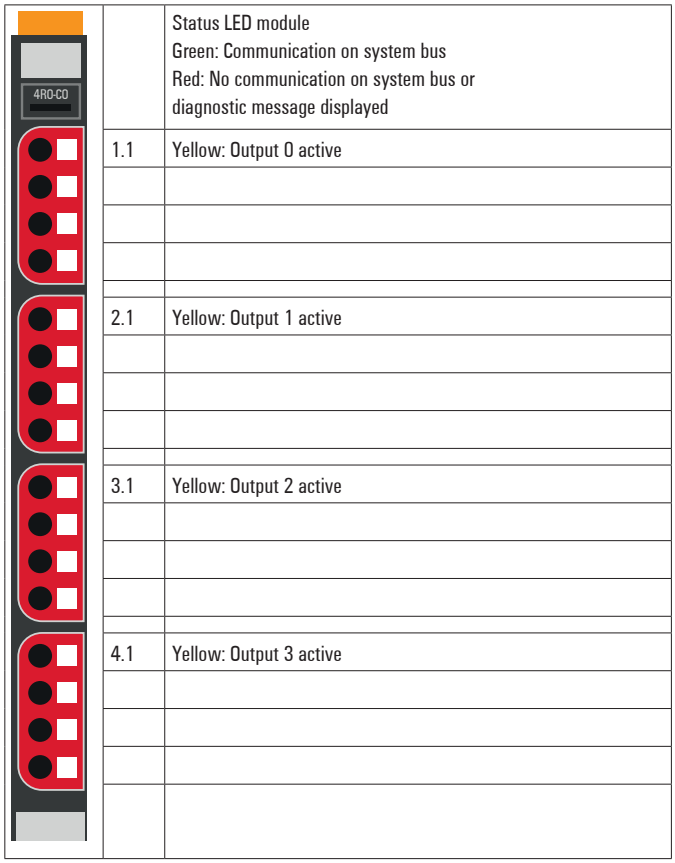

	Status LED module Green: Communication on system bus Red: No communication on system bus or diagnostic message displayed
1.1	Yellow: Output 0 active
2.1	Yellow: Output 1 active
3.1	Yellow: Output 2 active
4.1	Yellow: Output 3 active

LED indicators UR20-4RO-CO-255, troubleshooting see Chapter 12

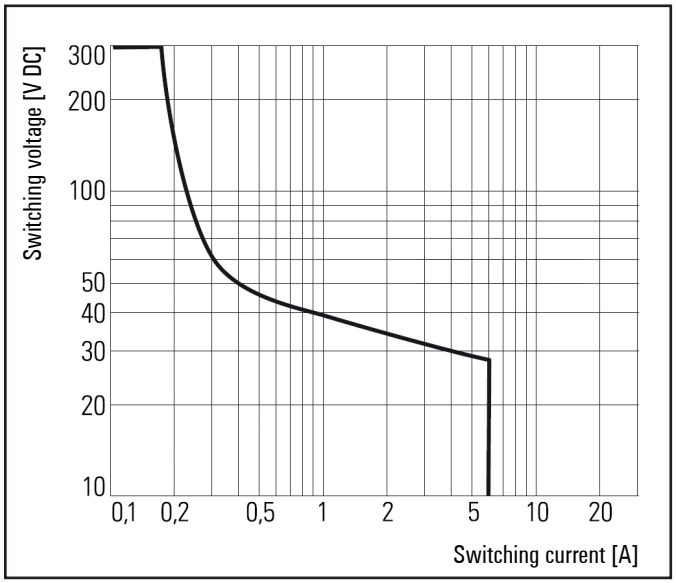

Derating curve: Maximum Switching voltage with resistive load

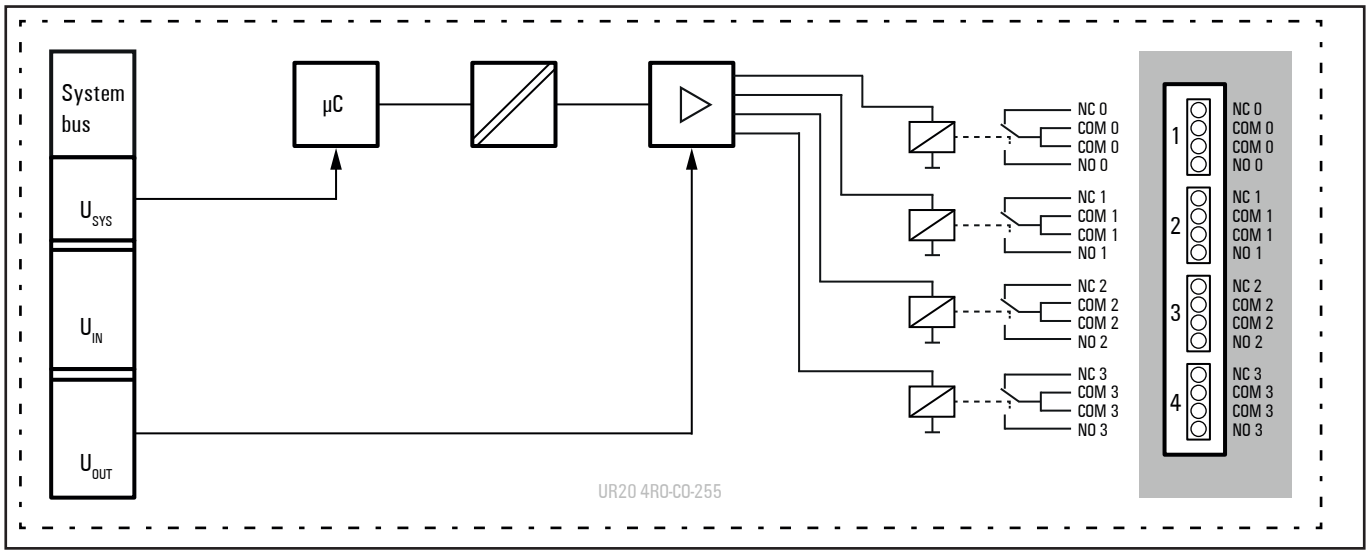

Block diagram UR20-4RO-CO-255

Technical data UR20-4RO-CO-255 (Item No. 1315550000)

System data	
Data	Process, parameter and diagnostic data depend on the coupler used, see coupler description.
Interface	u-remote system bus
System bus transfer rate	48 Mbps
Outputs	
Number	4
Type	CO contact
Response time	20 ms
Max. output current	per channel 5 A at 60 °C / 6 A at 55 °C (IECEx/ATEX/UKEX: 2,4 A at 60 °C / 3 A at 55 °C)
	per module 20 A at 60 °C / 24 A at 55 °C (IECEx/ATEX/UKEX: 9,6 A at 60 °C / 12 A at 55 °C)
Switching frequency	max. 5 Hz
Short-circuit-proof	no
Protective circuit	External fusing with 6 A slow prescribed
Service life with AC-15 load and 1-A switching current	> 300.000 switching cycles
Module diagnosis	yes
Individual channel diagnosis	no
Max. switching voltage	255 V AC, UL: 277 V AC, DC corresponding to the derating curve
Can be used with PF-O-xDI-SIL	no
Supply	
Supply voltage	24 V DC +20 %/-15 %
Current consumption from system current path I_{SYS}	8 mA
Current consumption from output current path I_{OUT}	4 mA + 4 mA per active relay
General data	
Weight (operational status)	106 g
For additional general data, see Section 3.4	

Overview of the editable parameter UR20-4RO-CO-255

Channel	Description	Options[1)]	Default
0 ... 3	Substitute value	Off (0) / On (1)	Off

1) Values in brackets for Modbus-TCP (firmware version 02.00.00 and higher), CANopen, EtherCAT and EtherNet/IP via module parameter class

Diagnostic data UR20-4RO-CO-255

Name	Bytes	Bit	Description	Default
Error indicator	0	0	Module error	
		1	Internal error	
		2	External error	
		3	Channel error	0
		4	Error	
		5	Reserved	0
		6	Reserved	0
		7	Parameter error	
Module type	1	0	Module Type	0x0F
		1		
		2		
		3		
		4	Reserved	0
		5	Reserved	0
		6	Reserved	0
		7	Reserved	0
Error byte 2	2	0 ... 7	Reserved	0
Error byte 3	3	0 ... 2	Reserved	0
		3	Internal diagnostic FIFO full	0
		4 ... 7	Reserved	0
Channel type	4	0 ... 6	Channel type	0x72
		7	Reserved	0
Diagnostic bits per channel	5		Number of diagnostic bit per channel	0
Number of channels	6		Number of similar channels per module	4
Channel error	7 ... 10	0 ... 31	Reserved	0
Channel 0 error to Channel 31 error	11 ... 42	0 ... 7	Reserved	0
Time stamp	43-46		time stamp [µs] (32bit)	

Process data outputs UR20-4RO-CO-255

Byte	Bit	Description
QB0	QX0.0	DO0
	QX0.1	DO1
	QX0.2	DO2
	QX0.3	DO3
	QX0.4	Reserved
	QX0.5	Reserved
	QX0.6	Reserved
	QX0.7	Reserved

6.32 Digital pulse width modulation output module UR20-2PWM-PN-0.5A

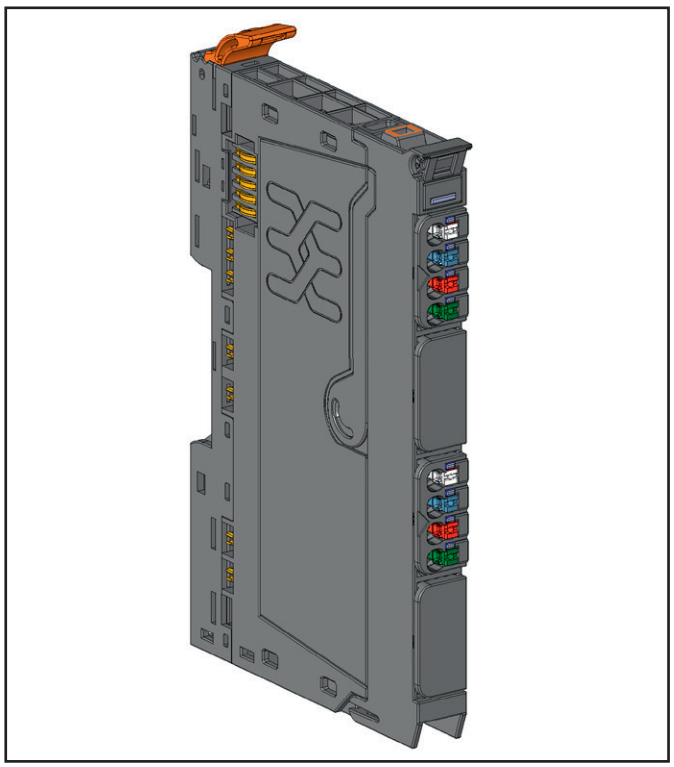

Digital pulse width modulation output module UR20-2PWM-PN-0.5A (Order No. 1315600000)

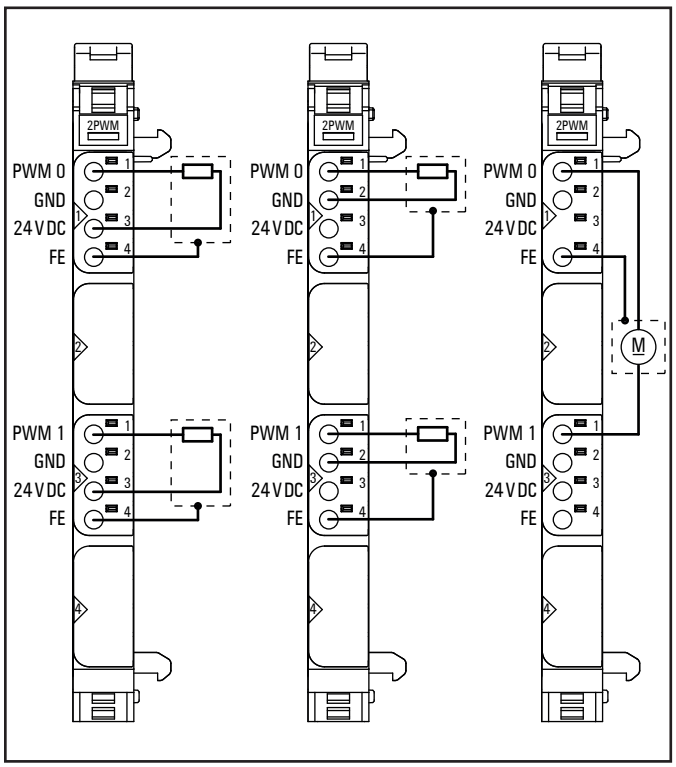

Connection diagram UR20-2PWM-PN-0.5A

The digital pulse width modulation module UR20-2PWM-PN-0.5A can control up to 2 actuators each with a maximum of 0.5 A. The period duration for each channel can be parameterised from 25 µs to approx. 175 ms (input values from 1202 to 8388607 based on a factor 0.02083 µs).
Via an output double word in the process data the pulse duration is defined from 25 µs to approx. 175 ms for each channel (input values from 0 to 8388607 based on a factor 0.02083 µs). If the pulse duration is equal or exceeds the duration of the period, the output is set permanently.
In another output word the output mode is switched and the output is being started and stopped. Deactivated outputs are set to GND.
For each channel the current status can be read in an status word. A status LED is assigned to each channel. The outputs are supplied with power from the output current path (I_{OUT}).
The module is protected against external voltages between 0 V and the operating voltage.

ATTENTION

The product may be damaged!
With inductive loads, the module must be used in the PN-switching mode, since otherwise an internal diode may be destroyed.

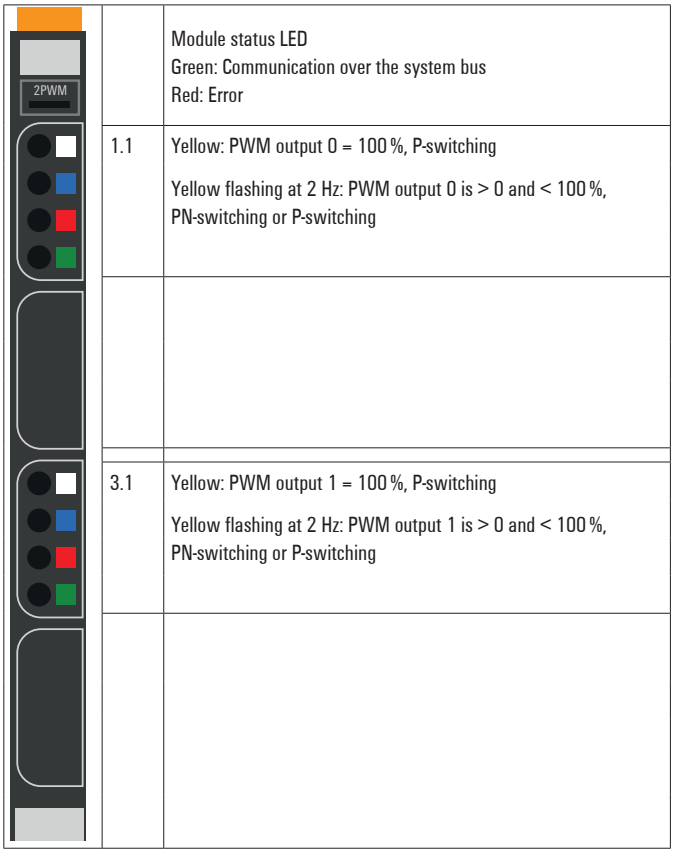

	Module status LED Green: Communication over the system bus Red: Error
1.1	Yellow: PWM output 0 = 100 %, P-switching Yellow flashing at 2 Hz: PWM output 0 is > 0 and < 100 %, PN-switching or P-switching
3.1	Yellow: PWM output 1 = 100 %, P-switching Yellow flashing at 2 Hz: PWM output 1 is > 0 and < 100 %, PN-switching or P-switching

LED indicators UR20-2PWM-PN-0.5A, troubleshooting see Chapter 12

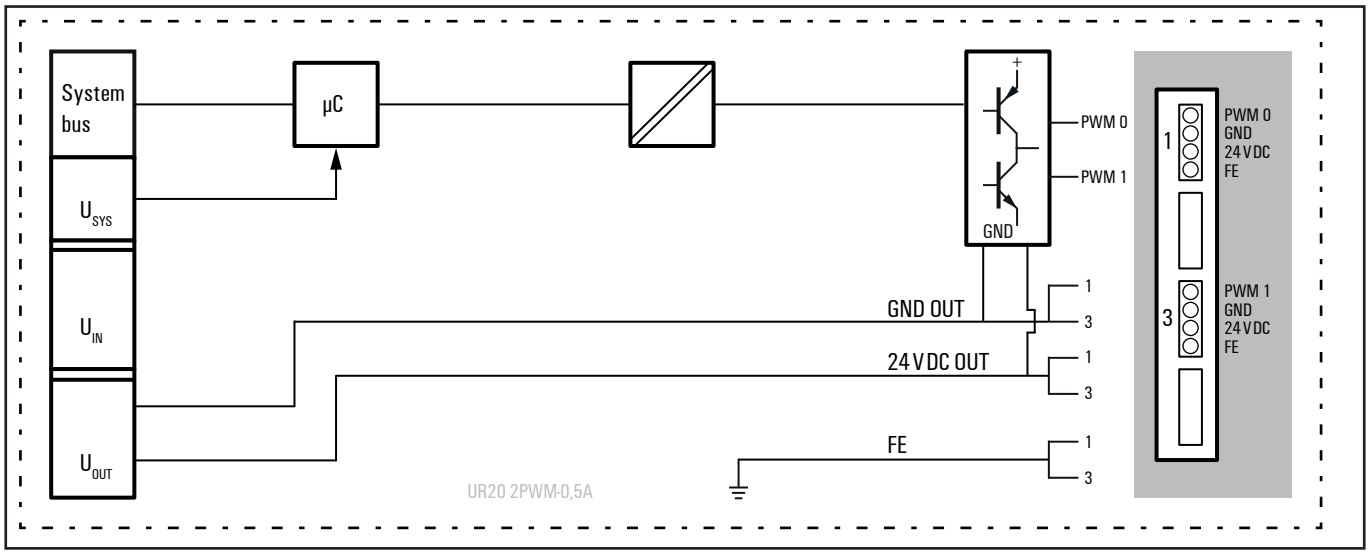

Block diagram UR20-2PWM-PN-0.5A

Technical data UR20-2PWM-PN-0.5A (Item No. 1315600000)

System data		
Data	Process, parameter and diagnostic data depend on the coupler used, see coupler description.	
Interface	u-remote system bus	
System bus transfer rate	48 Mbps	
Outputs		
Number	2	
Type	PN output stage	
Response time	< 0.1 µs	
Period duration	25 µs to 175 ms (≙ 40 kHz to 6 Hz)	
Max. output current	per channel	0.5 A
	per module	1 A
Switching frequency	Ohmic load (min. 47 Ω)	static, 6 Hz to 40 kHz
	Inductive load (DC 13)	static, 6 Hz to 40 kHz
	Lamp load (12 W)	static, 6 Hz to 40 kHz
Actuator connection	2-wire, 3-wire, 3-wire + FE	
Actuator supply (24 V DC)	max. 2 A per plug, total max. 4 A	
Pulse/period ratio	0–100 % PN-switching or P-switching, adjustable	
Short-circuit-proof	yes	
Response time of the protective circuit	<100 µs	
Module diagnosis	yes	
Individual channel diagnosis	no	
Can be used with PF-O-xDI-SIL	yes	
Supply		
Supply voltage	24 V DC +20 %/-15 %	
Current consumption from system current path I_{SYS}	8 mA	
Current consumption (from output current path I_{OUT})	40 mA	
General data		
Weight (operational status)	89 g	
For additional general data, see Section 3.4		

Overview of the editable parameters UR20-2PWM-PN-0.5A

Channel	Description	Options	Default
0 ... 1	Period duration = n*0.02083 µs	1202 ... 8388607	1202

Diagnostic data UR20-2PWM-PN-0.5A

Name	Bytes	Bit	Description	Default
Error indicator	0	0	Module error	
		1	Internal error	
		2	External error	
		3	Channel error	0
		4	Error	
		5	Reserved	0
		6	Reserved	0
		7	Parameter error	
Module type	1	0	Module Type	0x0F
		1		
		2		
		3		
		4	Reserved	0
		5	Reserved	0
		6	Reserved	0
		7	Reserved	0
Error byte 2	2	0 ... 7	Reserved	0
Error byte 3	3	0 ... 2	Reserved	0
		3	Internal diagnostic FIFO full	
		4 ... 7	Reserved	0
Channel type	4	0 ... 6	Channel type	0x72
		7	Reserved	0
Diagnostic bits per channel	5		Number of diagnostic bit per channel	0
Number of channels	6		Number of similar channels per module	2
Channel error	7 ... 10	0 ... 31	Reserved	0
Channel 0 error to Channel 31 error	11 ... 42	0 ... 7	Reserved	0
Time stamp	43-46		time stamp [µs] (32bit)	

Process data[1] inputs UR20-2PWM-PN-0.5A

Byte	Format	Name	Bit	Function, if active	Remarks
IB0	Word	Channel 0: Status word	IX0.0	reserved	
			IX0.1	Status PWM output	0: disabled, 1: enabled
			IX0.2	reserved	
			IX0.3	Output mode	0: PN-switching 1: P-switching
			IX0.4 ... 0.7	reserved	
IB1			IX1.0 ... 1.7	reserved	
IB2	Word	Channel 1: Status word	IX2.0	reserved	
			IX2.1	Status PWM output	0: disabled, 1: enabled
			IX2.2	reserved	
			IX2.3	Output mode	0: PN-switching 1: P-switching
			IX02.4 ... 2.7	reserved	
IB3			IX3.0 ... 3.7	reserved	

1) Internal process data mapping with data format “Standard”. Depending on the fieldbus specification and the data format of the communicating fieldbus components the bytes and/or words can be reversed during data transfer.

Process data[1] outputs UR20-2PWM-PN-0.5A

Byte	Format	Name	Bit	Function, if set	Remarks
QB0	Double Word	Channel 0: Pulse duration			Input value * 0.02083 µs Input range: 0 ... 8388607
QB1					
QB2					
QB3					
QB4	Double Word	Channel 1: Pulse duration			Input value * 0.02083 µs Input range: 0 ... 8388607
QB5					
QB6					
QB7					
QB8	Word	Channel 0: Control word	QX8.0 ... QX8.1	reserved	
			QX8.2	Output mode	0: PN-switching 1: P-switching
			QX8.3 ... QX8.7	reserved	
QB9			QX9.0	starts output	Setting with edge 0-1, dominates stop bit
			QX9.1	stops output	Setting with edge 0-1, start bit must be resetted
			QX9.2 ... QX9.7	reserved	
QB10	Word	Channel 1: Control word	QX10.0 ... QX10.1	reserved	
			QX10.2	Output mode	0: PN-switching 1: P-switching
			QX10.3 ... QX10.7	reserved	
QB11			QX11.0	starts output	Setting with edge 0-1, dominates stop bit
			QX11.1	stops output	Setting with edge 0-1, start bit must be resetted
			QX11.2 ... QX11.7	reserved	

1) Internal process data mapping with data format “Standard”. Depending on the fieldbus specification and the data format of the communicating fieldbus components the bytes and/or words can be reversed during data transfer.

6.33 Digital pulse width modulation output module UR20-2PWM-PN-0.5A-V2

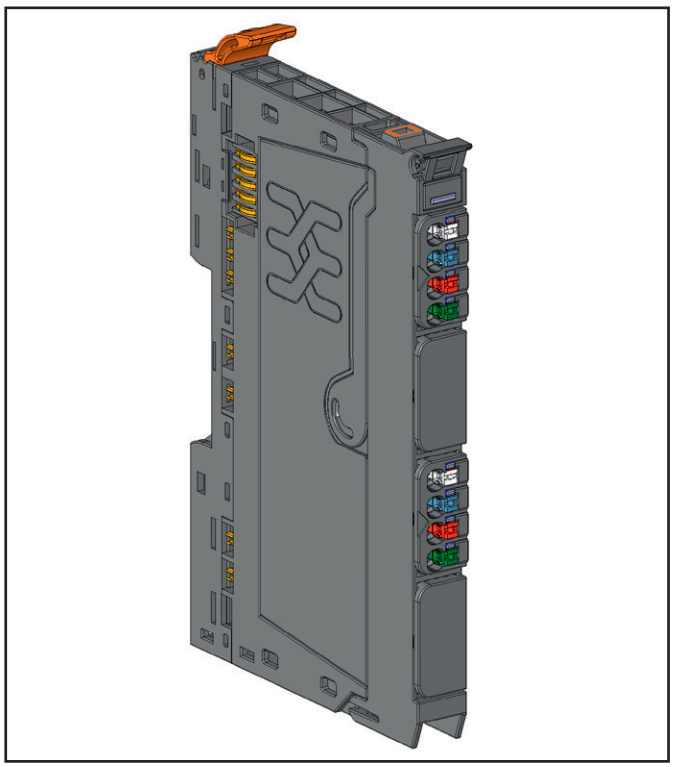

Digital pulse width modulation output module UR20-2PWM-PN-0.5A-V2 (Order No. 3036960000)

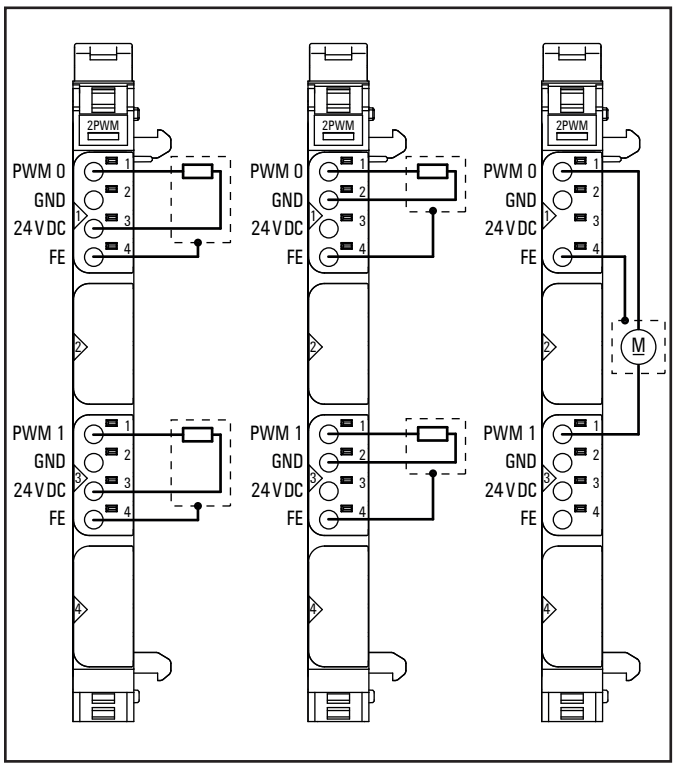

Connection diagram UR20-2PWM-PN-0.5A-V2

The digital pulse width modulation module UR20-2PWM-PN-0.5A-V2 can control up to 2 actuators each with a maximum of 0.5 A. The period duration for each channel can be parameterised from 25 µs to approx. 175 ms (input values from 1202 to 8388607 based on a factor 0.02083 µs).
Via an output double word in the process data the pulse duration is defined from 25 µs to approx. 175 ms for each channel (input values from 0 to 8388607 based on a factor 0.02083 µs). If the pulse duration is equal or exceeds the duration of the period, the output is set permanently.
In another output word the output mode is switched and the output is being started and stopped. Deactivated outputs are set to GND.
For each channel the current status can be read in an status word. A status LED is assigned to each channel. The outputs are supplied with power from the output current path (I_{OUT}).
The module is protected against external voltages between 0 V and the operating voltage.

ATTENTION

The product may be damaged!
With inductive loads, the module must be used in the PN-switching mode, since otherwise an internal diode may be destroyed.

Notice to users who switch from the old generation of PWM modules to the current PWM-V2 modules: With the V2 module version the stop bit is dominant. In the case that start and stop bits are set simultaneously, the outputs will be stopped. To start an output, the start bit must be set to 1 and the stop bit must not be set to 1.
The output mode is still set by QX8.2 and QX10.2, but it is now mapped to bit 2 (IX0.2 and IX2.2 respectively) in the status word for each channel (IB0 and IB1, IB2 and IB3 respectively) within the process data input of the module.
To monitor and to process the output mode status, now the bit 2 needs to be read back to the PLC (instead of bit 3 as before).
You can find more information in the Product Discontinuation Notification PDN-PC73-20240503-00-A. You can find the document in the Weidmüller Support Center.

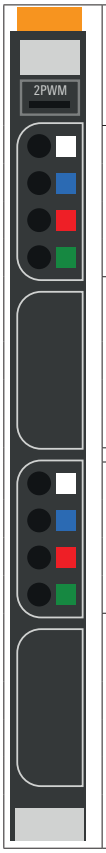

	Module status LED Green: Communication over the system bus Red: Error
1.1	Yellow: PWM output 0 = 100 %, P-switching Yellow flashing at 2 Hz: PWM output 0 is > 0 and < 100 %, PN-switching or P-switching
3.1	Yellow: PWM output 1 = 100 %, P-switching Yellow flashing at 2 Hz: PWM output 1 is > 0 and < 100 %, PN-switching or P-switching

LED indicators UR20-2PWM-PN-0.5A-V2, troubleshooting see Chapter 12

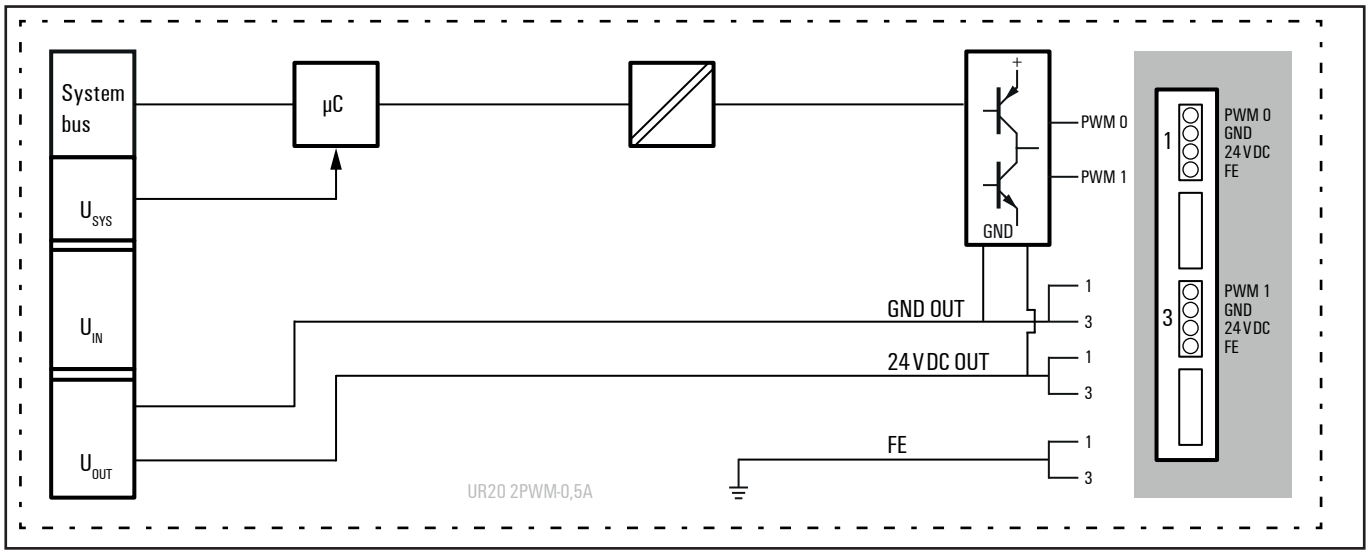

Block diagram UR20-2PWM-PN-0.5A-V2

Technical data UR20-2PWM-PN-0.5A-V2 (Item No. 3036960000)

System data		
Data	Process, parameter and diagnostic data depend on the coupler used, see coupler description.	
Interface	u-remote system bus	
System bus transfer rate	48 Mbps	
Outputs		
Number	2	
Type	PN output stage	
Response time	< 0.1 µs	
Period duration	25 µs to 175 ms (≙ 40 kHz to 6 Hz)	
Max. output current	per channel	0.5 A
	per module	1 A
Switching frequency	Ohmic load (min. 47 Ω)	static, 6 Hz to 40 kHz
	Inductive load (DC 13)	static, 6 Hz to 40 kHz
	Lamp load (12 W)	static, 6 Hz to 40 kHz
Actuator connection	2-wire, 3-wire, 3-wire + FE	
Actuator supply (24 V DC)	max. 2 A per plug, total max. 4 A	
Pulse/period ratio	0–100 % PN-switching or P-switching, adjustable	
Short-circuit-proof	yes	
Response time of the protective circuit	<100 µs	
Module diagnosis	yes	
Individual channel diagnosis	no	
Can be used with PF-O-xDI-SIL	yes	
Supply		
Supply voltage	24 V DC +20 %/-15 %	
Current consumption from system current path I_{SYS}	8 mA	
Current consumption (from output current path I_{OUT})	40 mA	
General data		
Weight (operational status)	89 g	
For additional general data, see Section 3.4		

Overview of the editable parameters UR20-2PWM-PN-0.5A-V2

Channel	Description	Options	Default
0 ... 1	Period duration = n*0.02083 µs	1202 ... 8388607	1202

Diagnostic data UR20-2PWM-PN-0.5A-V2

Name	Bytes	Bit	Description	Default
Error indicator	0	0	Module error	
		1	Internal error	
		2	External error	
		3	Channel error	0
		4	Error	
		5	Reserved	0
		6	Reserved	0
		7	Parameter error	
Module type	1	0	Module Type	0x0F
		1		
		2		
		3		
		4	Reserved	0
		5	Reserved	0
		6	Reserved	0
		7	Reserved	0
Error byte 2	2	0 ... 7	Reserved	0
Error byte 3	3	0 ... 2	Reserved	0
		3	Internal diagnostic FIFO full	
		4 ... 7	Reserved	0
Channel type	4	0 ... 6	Channel type	0x72
		7	Reserved	0
Diagnostic bits per channel	5		Number of diagnostic bit per channel	0
Number of channels	6		Number of similar channels per module	2
Channel error	7 ... 10	0 ... 31	Reserved	0
Channel 0 error to Channel 31 error	11 ... 42	0 ... 7	Reserved	0
Time stamp	43-46		time stamp [µs] (32bit)	

Process data[1] inputs UR20-2PWM-PN-0.5A-V2

Byte	Format	Name	Bit	Function, if active	Remarks
IB0	Word	Channel 0: Status word	IX0.0	reserved	
			IX0.1	Status PWM output	0: disabled, 1: enabled
			IX0.2	Output mode	0: PN-switching 1: P-switching
			IX0.3	reserved	
			IX0.4 ... 0.7	reserved	
IB1			IX1.0 ... 1.7	reserved	
IB2	Word	Channel 1: Status word	IX2.0	reserved	
			IX2.1	Status PWM output	0: disabled, 1: enabled
			IX2.2	Output mode	0: PN-switching 1: P-switching
			IX2.3	reserved	
			IX02.4 ... 2.7	reserved	
IB3			IX3.0 ... 3.7	reserved	

1) Internal process data mapping with data format “Standard”. Depending on the fieldbus specification and the data format of the communicating fieldbus components the bytes and/or words can be reversed during data transfer.

Process data[1] outputs UR20-2PWM-PN-0.5A-V2

Byte	Format	Name	Bit	Function, if set	Remarks
QB0	Double Word	Channel 0: Pulse duration			Input value * 0.02083 µs Input range: 0 ... 8388607
QB1					
QB2					
QB3					
QB4	Double Word	Channel 1: Pulse duration			Input value * 0.02083 µs Input range: 0 ... 8388607
QB5					
QB6					
QB7					
QB8	Word	Channel 0: Control word	QX8.0 ... QX8.1	reserved	
			QX8.2	Output mode	0: PN-switching 1: P-switching
			QX8.3 ... QX8.7	reserved	
QB9			QX9.0	starts output	Setting with edge 0-1, dominates stop bit
			QX9.1	stops output	Setting with edge 0-1, start bit must be resetted
			QX9.2 ... QX9.7	reserved	
QB10	Word	Channel 1: Control word	QX10.0 ... QX10.1	reserved	
			QX10.2	Output mode	0: PN-switching 1: P-switching
			QX10.3 ... QX10.7	reserved	
QB11			QX11.0	starts output	Setting with edge 0-1, dominates stop bit
			QX11.1	stops output	Setting with edge 0-1, start bit must be resetted
			QX11.2 ... QX11.7	reserved	

1) Internal process data mapping with data format “Standard”. Depending on the fieldbus specification and the data format of the communicating fieldbus components the bytes and/or words can be reversed during data transfer.

6.34 Digital pulse width modulation output module UR20-2PWM-PN-2A

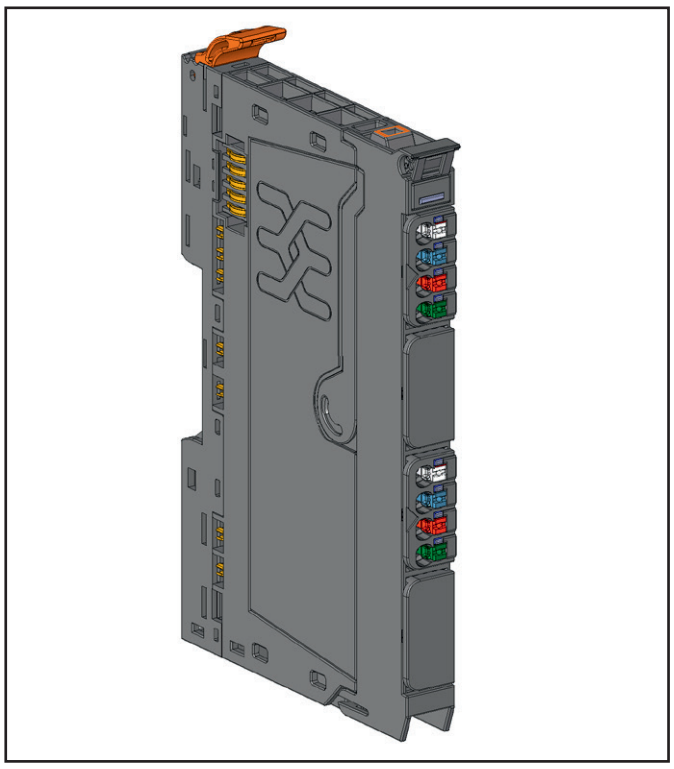

Digital pulse width modulation output module UR20-2PWM-PN-2A
(Order No. 1315610000)

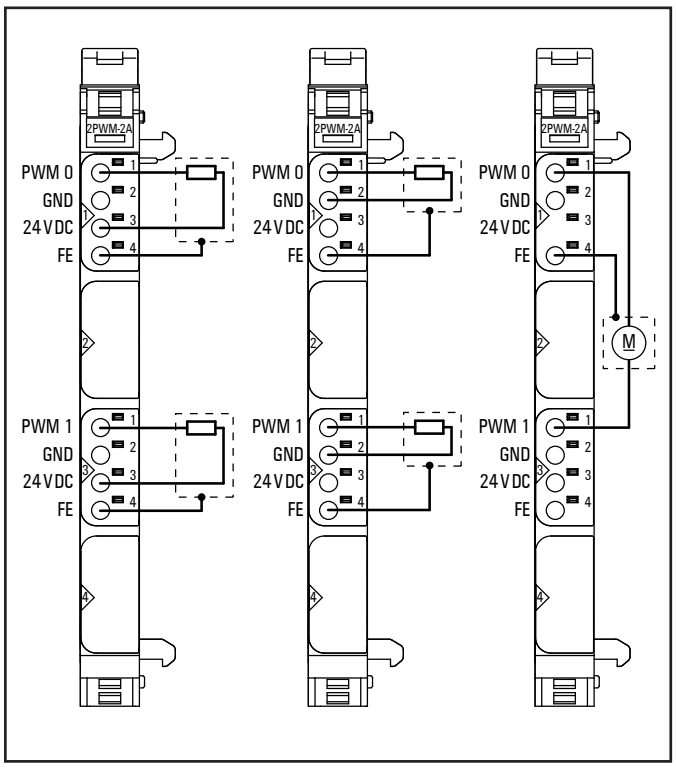

Connection diagram UR20-2PWM-PN-2A

The digital pulse width modulation module UR20-2PWM-PN-2A can control up to 2 actuators each with a maximum of 2 A. The period duration for each channel can be parameterised from 25 µs to approx. 175 ms (input values from 1202 to 8388607 based on a factor 0.02083 µs). Via an output double word in the process data the pulse duration is defined from 25 µs to approx. 175 ms for each channel (input values from 0 to 8388607 based on a factor 0.02083 µs). If the pulse duration is equal or exceeds the duration of the period, the output is set permanently.
In another output word the output mode is switched and the output is being started and stopped. Deactivated outputs are set to GND.
For each channel the current status can be read in an status word. A status LED is assigned to each channel. The outputs are supplied with power from the output current path (I_{OUT}). The module is protected against external voltages between 0 V and the operating voltage.

ATTENTION

The product may be damaged!
With inductive loads, the module must be used in the PN-switching mode, since otherwise an internal diode may be destroyed.

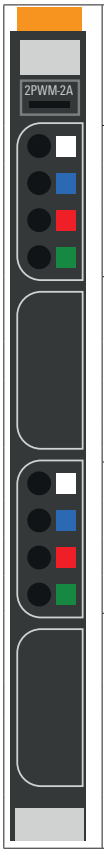

	Module status LED Green: Communication over the system bus Red: Error
1.1	Yellow: PWM output 0 = 100 %, P-switching Yellow flashing at 2 Hz: PWM output 0 is > 0 and < 100 %, PN-switching or P-switching
3.1	Yellow: PWM output 1 = 100 %, P-switching Yellow flashing at 2 Hz: PWM output 1 is > 0 and < 100 %, PN-switching or P-switching

LED indicators UR20-2PWM-PN-2A, troubleshooting see Chapter 12

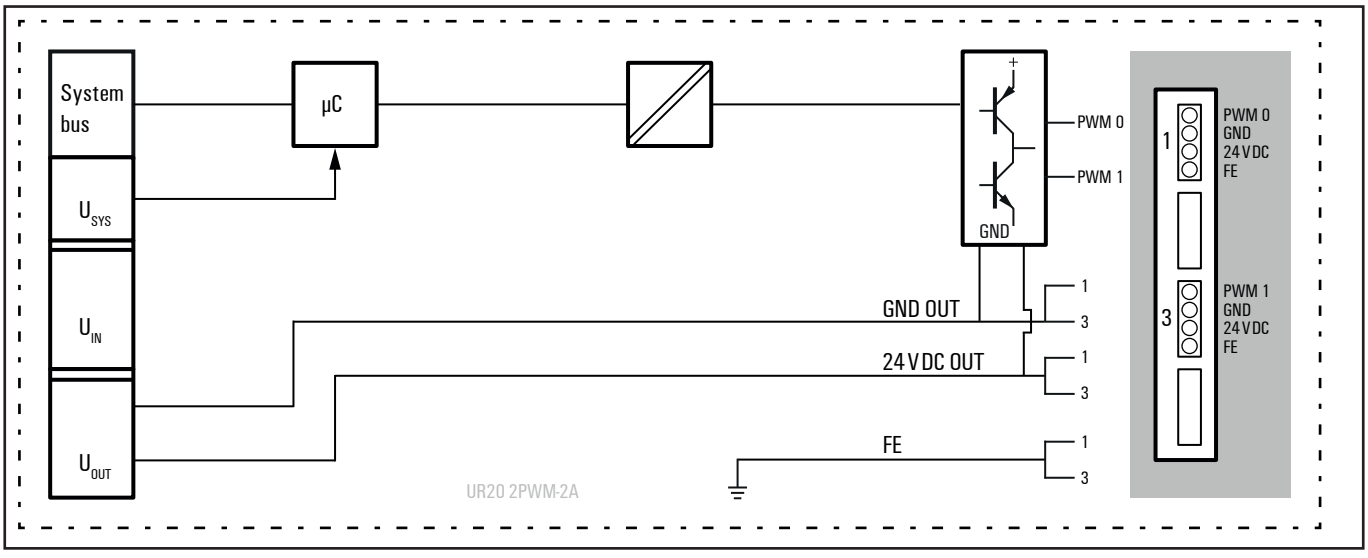

Block diagram UR20-2PWM-PN-2A

Technical data UR20-2PWM-PN-2A (Item No. 1315610000)

System data		
Data	Process, parameter and diagnostic data depend on the coupler used, see coupler description.	
Interface	u-remote system bus	
System bus transfer rate	48 Mbps	
Outputs		
Number	2	
Type	PN output stage	
Response time	< 0.1 µs	
Period duration	25 µs to 175 ms (≙ 40 kHz to 6 Hz)	
Max. output current	per channel	2 A
	per module	4 A
Switching frequency	Ohmic load (min. 12 Ω)	6 Hz to 40 kHz
	Inductive load (DC 13)	6 Hz to 40 kHz
	Lamp load (48 W)	6 Hz to 40 kHz
Actuator connection	2-wire, 3-wire, 3-wire + FE	
Actuator supply (24 V DC)	max. 2 A per plug, total max. 4 A	
Pulse/period ratio	0–100 % PN-switching or P-switching, adjustable	
Short-circuit-proof	yes	
Response time of the protective circuit	<100 µs	
Module diagnosis	yes	
Individual channel diagnosis	no	
Can be used with PF-O-xDI-SIL	yes	
Supply		
Supply voltage	24 V DC +20 %/-15 %	
Current consumption from system current path I_{SYS}	8 mA	
Current consumption from output current path I_{OUT}	40 mA	
General data		
Weight (operational status)	89 g	
For additional general data, see Section 3.4		

Overview of the editable parameters UR20-2PWM-PN-2A

Channel	Description	Options	Default
0 ... 1	Period duration = n*0.02083 µs	1202 ... 8388607	1202

Diagnostic data UR20-2PWM-PN-2A

Name	Bytes	Bit	Description	Default
Error indicator	0	0	Module error	
		1	Internal error	
		2	External error	
		3	Channel error	0
		4	Error	
		5	Reserved	0
		6	Reserved	0
		7	Parameter error	
Module type	1	0	Module Type	0x0F
		1		
		2		
		3		
		4	Reserved	0
		5	Reserved	0
		6	Reserved	0
		7	Reserved	0
Error byte 2	2	0 ... 7	Reserved	0
Error byte 3	3	0 ... 2	Reserved	0
		3	Internal diagnostic FIFO full	
		4 ... 7	Reserved	0
Channel type	4	0 ... 6	Channel type	0x72
		7	Reserved	0
Diagnostic bits per channel	5		Number of diagnostic bit per channel	0
Number of channels	6		Number of similar channels per module	2
Channel error	7 ... 10	0 ... 31	Reserved	0
Channel 0 error to Channel 31 error	11 ... 42	0 ... 7	Reserved	0
Time stamp	43-46		time stamp [µs] (32bit)	

Process data[1] inputs UR20-2PWM-PN-2A

Byte	Format	Name	Bit	Function, if active	Remarks
IB0	Word	Channel 0: Status word	IX0.0	reserved	
			IX0.1	Status PWM output	0: disabled, 1: enabled
			IX0.2	reserved	
			IX0.3	Output mode	0: PN-switching 1: P-switching
			IX0.4 ... 0.7	reserved	
IB1			IX1.0 ... 1.7	reserved	
IB2	Word	Channel 1: Status word	IX2.0	reserved	
			IX2.1	Status PWM output	0: disabled, 1: enabled
			IX2.2	reserved	
			IX2.3	Output mode	0: PN-switching 1: P-switching
			IX02.4 ... 2.7	reserved	
IB3			IX3.0 ... 3.7	reserved	

1) Internal process data mapping with data format "Standard". Depending on the fieldbus specification and the data format of the communicating fieldbus components the bytes and/or words can be reversed during data transfer.

Process data[1] outputs UR20-2PWM-PN-2A

Byte	Format	Name	Bit	Function, if set	Remarks
QB0	Double Word	Channel 0: Pulse duration			Input value * 0.02083 µs Input range: 0 ... 8388607
QB1					
QB2					
QB3					
QB4	Double Word	Channel 1: Pulse duration			Input value * 0.02083 µs Input range: 0 ... 8388607
QB5					
QB6					
QB7					
QB8	Word	Channel 0: Control word	QX8.0 ... QX8.1	reserved	
			QX8.2	Output mode	0: PN-switching 1: P-switching
			QX8.3 ... QX8.7	reserved	
QB9			QX9.0	starts output	Setting with edge 0-1, dominates stop bit
			QX9.1	stops output	Setting with edge 0-1, start bit must be resetted
			QX9.2 ... QX9.7	reserved	
QB10	Word	Channel 1: Control word	QX10.0 ... QX10.1	reserved	
			QX10.2	Output mode	0: PN-switching 1: P-switching
			QX10.3 ... QX10.7	reserved	
QB11			QX11.0	starts output	Setting with edge 0-1, dominates stop bit
			QX11.1	stops output	Setting with edge 0-1, start bit must be resetted
			QX11.2 ... QX11.7	reserved	

1) Internal process data mapping with data format "Standard". Depending on the fieldbus specification and the data format of the communicating fieldbus components the bytes and/or words can be reversed during data transfer.

6.35 Digital pulse width modulation output module UR20-2PWM-PN-2A-V2

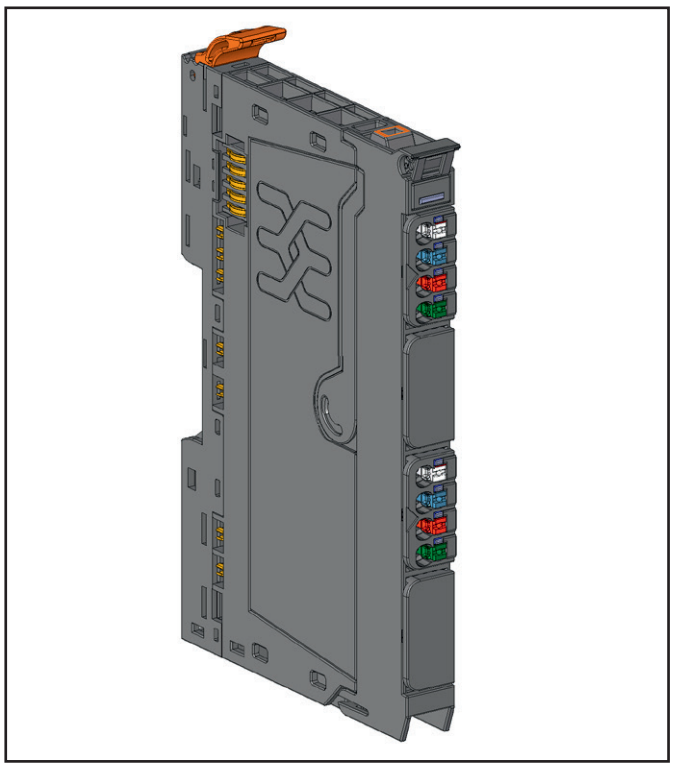

Digital pulse width modulation output module UR20-2PWM-PN-2A-V2 (Order No. 3036950000)

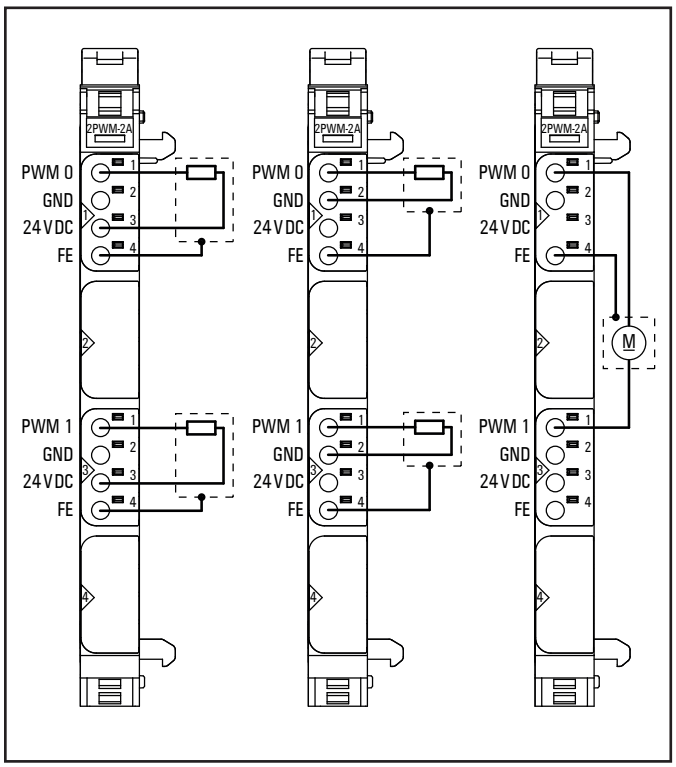

Connection diagram UR20-2PWM-PN-2A-V2

The digital pulse width modulation module UR20-2PWM-PN-2A-V2 can control up to 2 actuators each with a maximum of 2 A. The period duration for each channel can be parameterised from 25 µs to approx. 175 ms (input values from 1202 to 8388607 based on a factor 0.02083 µs).

Via an output double word in the process data the pulse duration is defined from 25 µs to approx. 175 ms for each channel (input values from 0 to 8388607 based on a factor 0.02083 µs). If the pulse duration is equal or exceeds the duration of the period, the output is set permanently.

In another output word the output mode is switched and the output is being started and stopped. Deactivated outputs are set to GND.

For each channel the current status can be read in an status word. A status LED is assigned to each channel. The outputs are supplied with power from the output current path (I_{OUT}). The module is protected against external voltages between 0 V and the operating voltage.

Notice to users who switch from the old generation of PWM modules to the current PWM-V2 modules: With the V2 module version the stop bit is dominant. In the case that start and stop bits are set simultaneously, the outputs will be stopped. To start an output, the start bit must be set to 1 and the stop bit must not be set to 1.
The output mode is still set by QX8.2 and QX10.2, but it is now mapped to bit 2 (IX0.2 and IX2.2 respectively) in the status word for each channel (IB0 and IB1, IB2 and IB3 respectively) within the process data input of the module.
To monitor and to process the output mode status, now the bit 2 needs to be read back to the PLC (instead of bit 3 as before).
You can find more information in the Product Discontinuation Notification PDN-PC73-20240503-00-A. You can find the document in the Weidmüller Support Center.



	Module status LED Green: Communication over the system bus Red: Error
1.1	Yellow: PWM output 0 = 100 %, P-switching Yellow flashing at 2 Hz: PWM output 0 is > 0 and < 100 %, PN-switching or P-switching
3.1	Yellow: PWM output 1 = 100 %, P-switching Yellow flashing at 2 Hz: PWM output 1 is > 0 and < 100 %, PN-switching or P-switching

LED indicators UR20-2PWM-PN-2A-V2, troubleshooting see Chapter 12

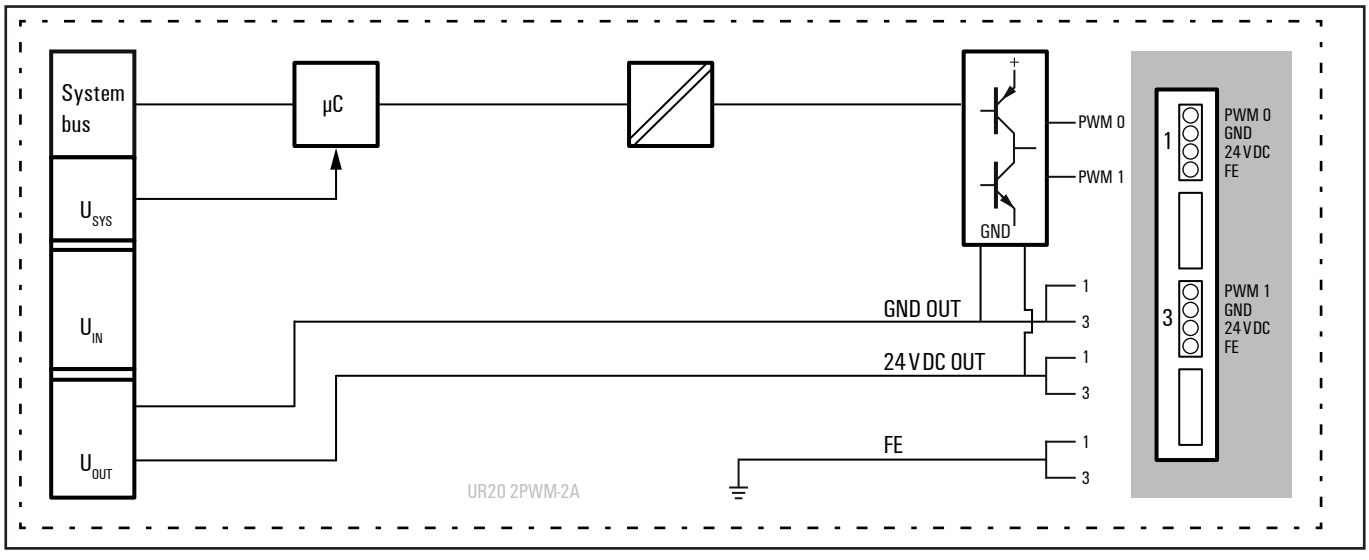

Block diagram UR20-2PWM-PN-2A-V2

Technical data UR20-2PWM-PN-2A-V2 (Item No. 3036950000)

System data		
Data	Process, parameter and diagnostic data depend on the coupler used, see coupler description.	
Interface	u-remote system bus	
System bus transfer rate	48 Mbps	
Outputs		
Number	2	
Type	PN output stage	
Response time	< 0.1 µs	
Period duration	25 µs to 175 ms (≙ 40 kHz to 6 Hz)	
Max. output current	per channel	2 A
	per module	4 A
Switching frequency	Ohmic load (min. 12 Ω)	6 Hz to 40 kHz
	Inductive load (DC 13)	6 Hz to 40 kHz
	Lamp load (48 W)	6 Hz to 40 kHz
Actuator connection	2-wire, 3-wire, 3-wire + FE	
Actuator supply (24 V DC)	max. 2 A per plug, total max. 4 A	
Pulse/period ratio	0–100 % PN-switching or P-switching, adjustable	
Short-circuit-proof	yes	
Response time of the protective circuit	<100 µs	
Module diagnosis	yes	
Individual channel diagnosis	no	
Can be used with PF-O-xDI-SIL	yes	
Supply		
Supply voltage	24 V DC +20 %/-15 %	
Current consumption from system current path I_{SYS}	8 mA	
Current consumption from output current path I_{OUT}	40 mA	
General data		
Weight (operational status)	89 g	
For additional general data, see Section 3.4		

Overview of the editable parameters UR20-2PWM-PN-2A-V2

Channel	Description	Options	Default
0 ... 1	Period duration = n*0.02083 µs	1202 ... 8388607	1202

Diagnostic data UR20-2PWM-PN-2A-V2

Name	Bytes	Bit	Description	Default
Error indicator	0	0	Module error	
		1	Internal error	
		2	External error	
		3	Channel error	0
		4	Error	
		5	Reserved	0
		6	Reserved	0
		7	Parameter error	
Module type	1	0	Module Type	0x0F
		1		
		2		
		3		
		4	Reserved	0
		5	Reserved	0
		6	Reserved	0
		7	Reserved	0
Error byte 2	2	0 ... 7	Reserved	0
Error byte 3	3	0 ... 2	Reserved	0
		3	Internal diagnostic FIFO full	
		4 ... 7	Reserved	0
Channel type	4	0 ... 6	Channel type	0x72
		7	Reserved	0
Diagnostic bits per channel	5		Number of diagnostic bit per channel	0
Number of channels	6		Number of similar channels per module	2
Channel error	7 ... 10	0 ... 31	Reserved	0
Channel 0 error to Channel 31 error	11 ... 42	0 ... 7	Reserved	0
Time stamp	43-46		time stamp [µs] (32bit)	

Process data[1] inputs UR20-2PWM-PN-2A-V2

Byte	Format	Name	Bit	Function, if active	Remarks
IB0	Word	Channel 0: Status word	IX0.0	reserved	
			IX0.1	Status PWM output	0: disabled, 1: enabled
			IX0.2	Output mode	0: PN-switching 1: P-switching
			IX0.3	reserved	
			IX0.4 ... 0.7	reserved	
IB1			IX1.0 ... 1.7	reserved	
IB2	Word	Channel 1: Status word	IX2.0	reserved	
			IX2.1	Status PWM output	0: disabled, 1: enabled
			IX2.2	Output mode	0: PN-switching 1: P-switching
			IX2.3	reserved	
			IX02.4 ... 2.7	reserved	
IB3			IX3.0 ... 3.7	reserved	

1) Internal process data mapping with data format "Standard". Depending on the fieldbus specification and the data format of the communicating fieldbus components the bytes and/or words can be reversed during data transfer.

Process data[1] outputs UR20-2PWM-PN-2A-V2

Byte	Format	Name	Bit	Function, if set	Remarks
QB0	Double Word	Channel 0: Pulse duration			Input value * 0.02083 µs Input range: 0 ... 8388607
QB1					
QB2					
QB3					
QB4	Double Word	Channel 1: Pulse duration			Input value * 0.02083 µs Input range: 0 ... 8388607
QB5					
QB6					
QB7					
QB8	Word	Channel 0: Control word	QX8.0 ... QX8.1	reserved	
			QX8.2	Output mode	0: PN-switching 1: P-switching
			QX8.3 ... QX8.7	reserved	
QB9			QX9.0	starts output	Setting with edge 0-1, dominates stop bit
			QX9.1	stops output	Setting with edge 0-1, start bit must be resetted
			QX9.2 ... QX9.7	reserved	
QB10	Word	Channel 1: Control word	QX10.0 ... QX10.1	reserved	
			QX10.2	Output mode	0: PN-switching 1: P-switching
			QX10.3 ... QX10.7	reserved	
QB11			QX11.0	starts output	Setting with edge 0-1, dominates stop bit
			QX11.1	stops output	Setting with edge 0-1, start bit must be resetted
			QX11.2 ... QX11.7	reserved	

1) Internal process data mapping with data format "Standard". Depending on the fieldbus specification and the data format of the communicating fieldbus components the bytes and/or words can be reversed during data transfer.

6.36 Current controlled PWM module UR20-2PWM-I-2.5A-2DI-P

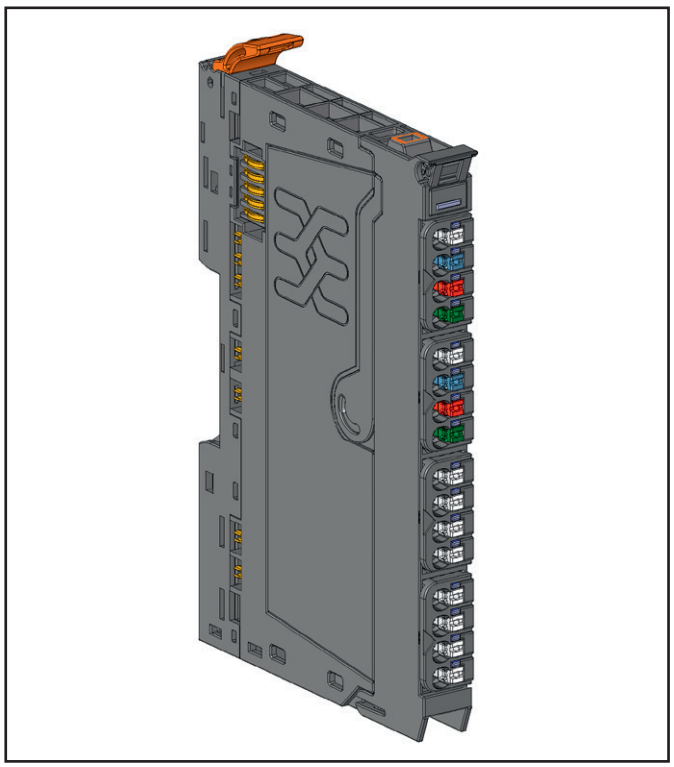

Current controlled PWM module UR20-2PWM-I-2.5A-2DI-P (Order No. 2697910000)

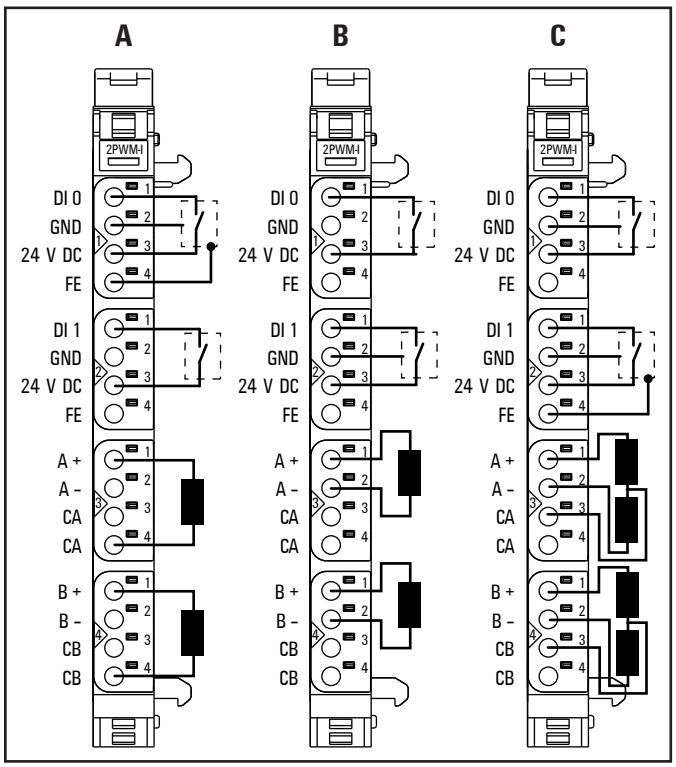

Connection diagram UR20-2PWM-I-2.5A-2DI-P (A: 2 coils unipolar, B: 2 coils bipolar, C: 2 × 2 coils unipolar in 3-wire technology)

The current controlled PWM module UR20-2PWM-I-2.5A-2DI-P controls the current by up to two external inductive-ohmic loads with cut-off frequencies of several kHz, e.g. proportional valves or DC motors. For this purpose the module has 2 power amplifier outputs with PWM signal. Each channel has a return conductor with two connections each (CA and CB). The module supports the connection of bipolar actuators. The outputs are located at connectors 3 and 4.

One sensor each in 2-wire, 3-wire or 3-wire technology + FE can additionally be connected to the plug connectors 1 and 2.

The module electronics supply the sensors and the actuators from the output current path (I_{OUT}).

Use shielded cables to connect the loads.

	Designation	Function/connection
1.1	DI 0	DIO: Signal voltage
1.2	GND	DIO: 0 V (U_{OUT})
1.3	24 V	DIO: 24 V (U_{OUT})
1.4	FE	DIO: Functional earth
2.1	DI 1	DI1: Signal voltage
2.2	GND	DI1: 0 V (U_{OUT})
2.3	24 V	DI1: 24 V (U_{OUT})
2.4	FE	DI1: Functional earth
3.1	A+	Coil A +
3.2	A–	Coil A –
3.3	CA	Return conductor output A
3.4	CA	Return conductor output A
4.1	B+	Coil B +
4.2	B–	Coil B –
4.3	CB	Return conductor output B
4.4	CB	Return conductor output B

ATTENTION

Module or actuator can be destroyed!

► Always connect actuators with integrated free-wheeling diodes unipolar to avoid malfunctions or short circuits.

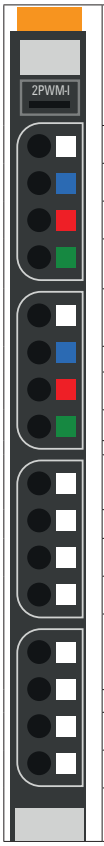

	Status LED module Green: Communication on the system bus Red: Error
1.1	Yellow: Input 0 active
1.3	Red: Sensor supply overload connector 1
2.1	Yellow: Input 1 active
2.3	Red: Sensor supply overload connector 2
3.1	Green: Current controller active channel A
3.3	Red: Error channel A
3.4	Yellow: Dithering active channel A
4.1	Green: Current controller active channel B
4.3	Red: Error channel B
4.4	Yellow: Dithering active channel B

LED indicators UR20-2PWM-I-2.5A-2DI-P, troubleshooting see Chapter 12

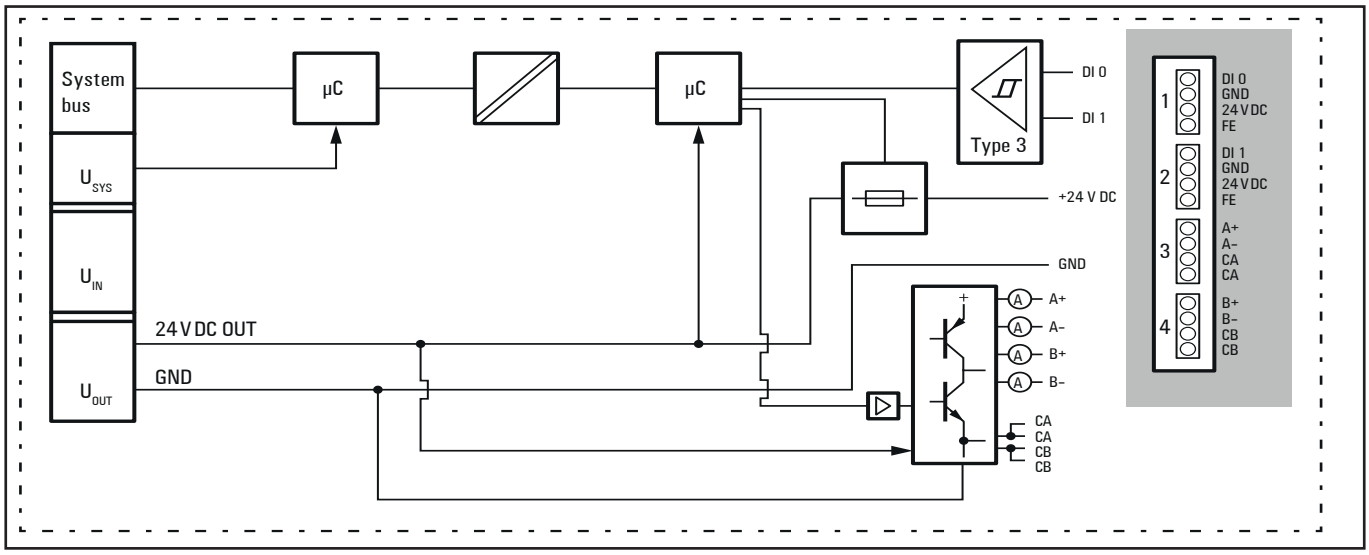

Block diagram UR20-2PWM-I-2.5A-2DI-P

Technical data UR20-2PWM-I-2.5A-2DI-P (Item No. 2697910000)

System data		
Data	Process, parameter and diagnostic data depend on the coupler used, see coupler description.	
Interface	u-remote system bus	
System bus transfer rate	48 Mbps / 192 Mbps	
Galvanic isolation	500 V DC between current paths	
Module diagnosis	yes	
Inputs		
Number	2	
Input types	P-switching, for sensors Type 1 and 3 according to IEC 61131-2	
Input filter	Input delay adjustable from 0 to 40 ms	
Input voltage low	–30 … +5 V, with reference to GND	
Input voltage high	+11 … +30 V, with reference to GND	
Sensor supply	0.3 A	
Sensor connection	2-wire, 3-wire, 3-wire + FE	
Reverse polarity protection	yes	
Channel diagnosis	yes	
Outputs		
Number	2	
Type	Power amplifier output, PWM signal	
Max. output current	1-channel operation	max. 3 A
	2-channel operation	max. 2.5 A per channel
Resolution A/D converter	12 Bit	
Resolution current target value	1 mA (16 Bit)	
Switching frequency (pulse width modulation)	30 kHz ±10 %	
Dithering frequency	10 … 500 Hz	
Dithering amplitude	max. 50 % referred to the target current (in 0.1% steps)	
Type of load	Valves, coils (ohmic-inductive)	1 … 600 mH
Actuator connection	bipolar (A+, A– and B+, B–)	
	unipolar (each with additional return conductor CA and CB)	
	parameterisable	
Controler mode	Current control	
	Current control 2-wire	
	Pulse/period ratio	
Pulse/period ratio	0 … 100 %, automatically controlled or adjustable	
Response time of the protective circuit	< 100 µs	
Overload protection	yes, overcurrent and thermal	
Individual channel diagnosis	yes	
Fail safe insulation	yes	
Can be used with PF-O-xDI-SIL	yes	

Technical data UR20-2PWM-I-2.5A-2DI-P (Item No. 2697910000)

Supply	
Supply voltage	24 V DC +20 %/-15 %
Current consumption from system current path I_{SYS}	9 mA
Current consumption from output current path I_{OUT}	25 mA
General data	
Weight (operational status)	97 g
For additional general data, see Section 3.4	

Overview of the editable parameters UR20-2PWM-I-2.5A-2DI-P

Channel	Description	Options1)	Default	Note
0	Function DI	Digital input (0) / Jog up A (1) / Jog up B (2) / Tip up A (3) / Tip up B (4) / Activation target value A (5) / Deactivation target value A (6)	Digital input	
0	Input delay	No (0) / 0,5 ms (1) / 3 ms (2) / 10 ms (3) / 20 ms (4) / 40 ms (5)	3 ms	
0	Diagnostic alarm	disabled (0) / enabled (1)	enabled	
1	Function DI	Digital input (0) / Jog down A (1) / Jog down B (2) / Tip down A (3) / Tip down B (4) / Activation target value B (5) / Deactivation target value B (6)	Digital input	
1	Input delay	No (0) / 0,5 ms (1) / 3 ms (2) / 10 ms (3) / 20 ms (4) / 40 ms (5)	3 ms	
1	Diagnostic alarm	disabled (0) / enabled (1)	enabled	
2 … 3	Max. output current	1 … 3000	2500	in mA
2 … 3	Controller mode	Current control (0) / Current control 2-wire (1) / Pulse/period ratio (2)	Current control	
2 … 3	Full scale value	1 … 32767	2500	
2 … 3	Substitute value	-32767 … 32767	0	
2 … 3	Dithering frequency	10 … 500	250	in Hz
2 … 3	Dithering amplitude	0,1 (1) / 0,2 (2) … 50,0 (500)	20,0	in %
2 … 3	Dithering switch-off ramp	0 … 32767	0	in ms
2 … 3	Valve characteristic Y0	0 … 32767	0	
2 … 3	Valve characteristic X1	0 … 32767	0	
2 … 3	Valve characteristic Y1	0 … 32767	0	
2 … 3	Valve characteristic X2	0 … 32767	0	
2 … 3	Valve characteristic Y2	0 … 32767	0	
2 … 3	Current switch-on ramp	0 … 32767	0	in ms
2 … 3	Current switch-off ramp	0 … 32767	0	in ms
2 … 3	Integrator constant	1 .. 65535	300	
2 … 3	Proportional constant	1 … 65535	30	
2 … 3	Diagnostic alarm	disabled (0) / enabled (1)	enabled	

Diagnostic data UR20-2PWM-I-2.5A-2DI-P

Name	Byte	Bit	Description	Default
Error indicator	0	0	Module error	0
		1	Internal error	0
		2	External error	0
		3	Channel error	0
		4	Error	0
		5	Power supply fault	0
		6	Reserved	0
		7	Parameter error	0
Module type	1	0	Module Type	0x08
		1		
		2		
		3		
		4	Channel information available	1
		5 ... 7	Reserved	0
Error byte 2	2	0 ... 7	Reserved	0
Error byte 3	3	0 ... 2	Reserved	0
		3	Internal diagnostic FIFO full	0
		4	Power supply fault	0
		5 ... 7	Reserved	0
Channel type	4	0	Channel type	0x61
		1		
		2		
		3		
		4		
		5		
		6		
		7	Reserved	0
Diagnostic bits per channel	5		Number of diagnostic bit per channel	8
Number of channels	6		Number of similar channels per module	4
Channel error	7	0	Error at channel 0	0
		1	Error at channel 1	0
		2	Error at channel 2	0
		3	Error at channel 3	0
		4 ... 7	Reserved	0
	8 ... 10	8 ... 31	Reserved	0
Channel 0 error	11	0	Parameter error	0
		1 ... 2	Reserved	0
		3	Sensor supply fault	0
		4 ... 7	Reserved	0
Channel 1 error	12	0	Parameter error	0
		1 ... 2	Reserved	
		3	Sensor supply fault	
		4 ... 7	Reserved	0

Diagnostic data UR20-2PWM-I-2.5A-2DI-P

Name	Byte	Bit	Description	Default
Channel 2 error	13	0	Parameter error	0
		1	Undervoltage	0
		2	Overvoltage	0
		3	Overload	0
		4	Overtemperature	0
		5	Line break	0
		6 ... 7	Reserved	0
Channel 3 error	14	0	Parameter error	0
		1	Undervoltage	0
		2	Overvoltage	0
		3	Overload	0
		4	Overtemperature	0
		5	Line break	0
		6 ... 7	Reserved	0
Channel 4 error ... Channel 31 error	15 ... 42	0 ... 7	Reserved	0
Time stamp	43 ... 46		time stamp [µs] (32bit)	

Process data inputs UR20-2PWM-I-2.5A-2DI-P

Byte	Format	Bit	Description	Remark
IB0	Byte	0	Status DI 0	0 = Low, 1 = High
		1	Status DI 1	0 = Low, 1 = High
		2 ... 7	-	-
IB1	Byte	0 ... 7	internal temperature	current internal temperature in °C
IB2 ... IB3	uint16	0 ... 7	Supply voltage	current supply voltage in 0.1 V
		0 ... 7		
IB4 ... IB5	int16	IX4.0 ...IX5. 7	current value channel A	current current in channel A in mA
IB6 ... IB7	int16	IX6.0 ... IX7.7	current value channel B	current current in channel B in mA

Process data outputs UR20-2PWM-I-2.5A-2DI-P

Byte	Format	Bit	Description	Remark
QB0 ... QB1	int16	0 ... 7	Target value channel A	target value channel A or step width in Jog mode channel A or max. change in Tip mode channel A in user-defined increments
		0 ... 7		
QB2 ... QB3	int16	0 ... 7	Target value channel B	target value channel B or step width in Jog mode channel B or max. change in Tip mode channel B in user-defined increments
		0 ... 7		
QB4	Byte	QB4.0	Enable output stage (A)	0 = Off, 1 = On
		QB4.1	Enable current ramp (A)	0 = Off, 1 = On
		QB4. 2	Enable dithering (A)	0 = Off, 1 = On
		QB4. 3	Enable dithering ramp (A)	0 = Off, 1 = On
		QB4. 4 ... QB4. 7	-	-
QB5	Byte	QB5.0	Enable output stage (B)	0 = Off, 1 = On
		QB5.1	Enable current ramp (B)	0 = Off, 1 = On
		QB5.2	Enable dithering (B)	0 = Off, 1 = On
		QB5.3	Enable dithering ramp (B)	0 = Off, 1 = On
		QB5.4 ... QB5.7	-	-
QB10 ... QB15	Byte	QB10.0 ... QB15.7	-	-

Module application

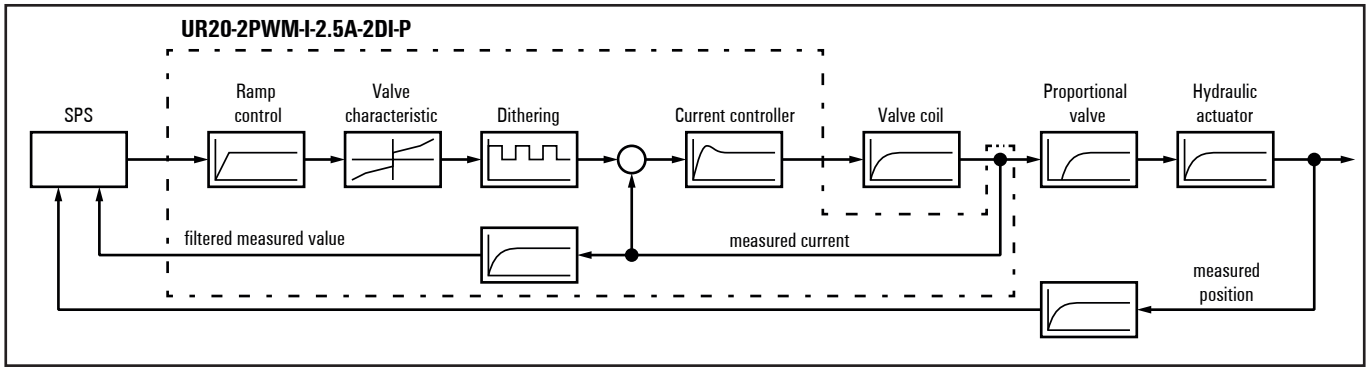

Example: current-controlled PWM module in cascade control for positioning a hydraulic actuator

The module is designed as a driver for proportional valves, it can relieve a PLC when controlling hydraulic actuators. Alternatively, the module can control a DC motor or an electromagnet.
Furthermore, the module implements pre-filters for use with proportional valves:
- ramp control
- parameterisable valve characteristic
- dithering

The target value is set via the process date **Target value** for the respective channel. As soon as the process date **Enable output stage** is set for the respective channel, the output current is controlled to the set value.
If the target value is exactly 0, outputs A+, A- and CA or B+, B- and CB are short-circuited, provided that the output is activated. No control takes place and the current will reliably drop to zero. This is independent of the controller mode and the valve characteristic or user scaling.

Ramps and dithering can be enabled and disabled via the process data **Enable current ramp**, **Enable dithering** and **Enable dithering ramp**.

Parameter Input delay

We recommend debouncing switches, especially mechanical switches. To do this, set the **Input delay** parameter of the respective channel to a suitable value.

Parameter Function DI

You can use the digital inputs DI0 and DI1 to intervene in the current control. To do this, you must parameterise the inputs for jog mode and tip mode.

Jog mode

In jog mode, the target value increases or decreases by a predefined value as soon as a positive edge is applied to the respective input. The value by which the target value changes is specified with the process datum **Target value channel A** or **Target value channel B**. The rate of change is the value of the parameter **Max. output current** divided by 10 s.

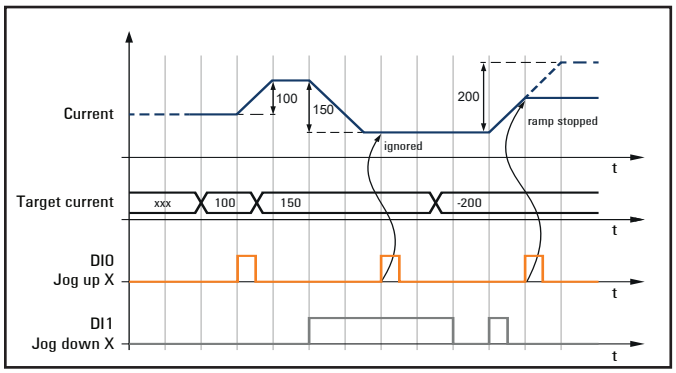

Jog mode

The jog mode is parameterised with **Function DI** of channels 0 and 1 by combining the following values:

Jog high A

As soon as DI0 is activated, the target value for the current increases by the value of the process date **Target value channel A**, due to the load at connetor 3. If you use this setting, you must set the **Function DI** parameter of channel 1 to **Jog down A**.

Jog high B

As soon as DI0 is activated, the target value for the current increases by the value of the process date **Target value channel B**, due to the load at connetor 4. If you use this setting, you must set the **DI function** parameter of channel 1 to **Jog down B**.

Jog down A
As soon as DI1 is activated, the target value for the current decreases by the value of the process date **Target value channel A**, due to the load at connetor 3. If you use this setting, you must set the parameter **Function DI** of channel 0 to **Jog high A**.

Jog down B
As soon as DI1 is activated, the target value for the current decreases by the value of the process date **Target value channel B**, due to the load at connetor 4. If you use this setting, you must set the **DI function** parameter of channel 0 to **Jog high B**.

If two conflicting jog signals are present at the same time, the target value does not change.

Tip mode
In jog mode, the target value increases or decreases continuously as long as the input concerned is activated. The rate of change is the value of the parameter **Max. output current** divided by 10 s. The target value changes by a maximum of the amount specified by the process date **Target value channel A** or **Target value channel B**.

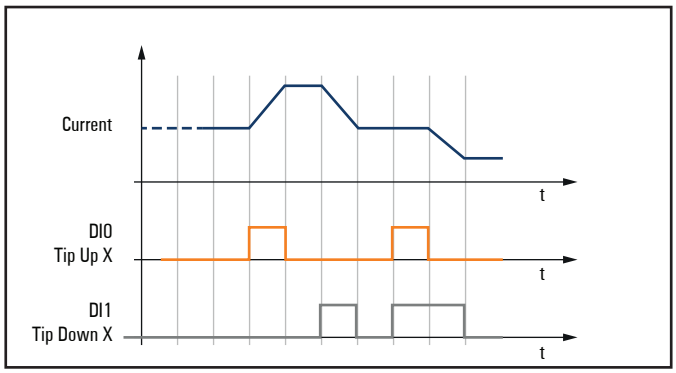

Tip mode

The tip mode is parameterised with **Function DI** of channels 0 and 1 by combining the following values:

Tip high A
As long as DI0 is activated, the target value for the current due to the load at connector 3 (coil A) increases. If you use this setting, you must set the **DI function** parameter of channel 1 to **Jog down A**.

Tipp hoch B
As long as DI0 is activated, the target value for the current due to the load at connector 4 (coil B) increases. If you use this setting, you must set the **DI function** parameter of channel 1 to **Jog down B**.

Tip down A
As long as DI1 is activated, the target value for the current decreases by the value of the process date **Target value channel A**, due to the load at connetor 3. If you use this setting, you must set the **Function DI** parameter of channel 0 to **Tip up A**.

Tip down B
As long as DI1 is activated, the target value for the current decreases by the value of the process date **Target value channel B**, due to the load at connetor 4. If you use this setting, you must set the **Function DI** parameter of channel 0 to **Tip up B**.

If two conflicting jog signals are present at the same time, the target value does not change.

The jog mode and the tip mode only work if the respective settings for the two inputs DI0 and DI1 are complementary:
DI0/Jog high A needs **DI1/Jog down A**
DI0/Tip high A needs **DI1/Tip down A**
DI0/Jog high B needs **DI1/Jog down B**
DI0/Tip high B needs **DI1/Tip down B**

Activation target value A
The current control for coil A is activated as soon as DI0 is activated. The current control for coil A is set to 0 mA as soon as DI0 is deactivated. After DI0 is activated again, the current control continues automatically according to the process data.

Activation target value B
The current control for coil B is activated as soon as DI1 is activated. The current control for coil B is set to 0 mA as soon as DI1 is deactivated. After DI1 is activated again, the current control continues automatically according to the process data.

Deactivation target value A
The current control for coil A is set to 0 mA as soon as DI0 is activated. The current control for coil A is reactivated as soon as DI0 is activated. After DI0 is deactivated again, the current control continues automatically according to the process data.

Deactivation target value B
The current control for coil B is set to 0 mA as soon as DI1 is activated. The current control for coil B is reactivated as soon as DI1 is activated. After DI1 is deactivated again, the current control continues automatically according to the process data.

Ramp control

You can parameterise the time for the change between two current values. During this time, the current changes linearly from the original value to the new value.

These switch-on and switch-off ramps are used when the process datum **Enable current ramp** is activated. The switch-on ramp is used when the absolute value of the current is increased. The switch-off ramp is used when the absolute value of the current is decreased. Deactivating the process date **Enable current ramp** terminates all ramps and sets the target value immediately.

Switch-on and switch-off ramps are only used if the process date **Controller enable** has been activated beforehand. Deactivating the process date **Controller enable** ends all ramps immediately.

Current switch-on ramp

The length of the switch-on ramp in ms is parameterised via the **Current switch-on ramp** parameter.

Current switch-off ramp

The length of the switch-off ramp in ms is parameterised via the **Current switch-off ramp** parameter.

Setting the valve characteristic curve

You can parameterise a characteristic curve for the relationship between the target value in the process output data and the actual current. The parameters **Valve characteristic ...** correspond to the respective coordinates of the characteristic. The parameter **Scale end value** corresponds to coordinate X3. The parameter **Max. output current** corresponds to coordinate Y3. The values between the parameterised coordinates are calculated by linear interpolation.

The characteristic curve is always symmetrical to the origin.

The characteristic curve must assign a unique current value to each target value. Therefore, Y0 ≤ Y1 ≤ Y2 ≤ Y3 and X1 ≤ X2 ≤ X3 apply. An ambiguous characteristic curve generates a parameter error.

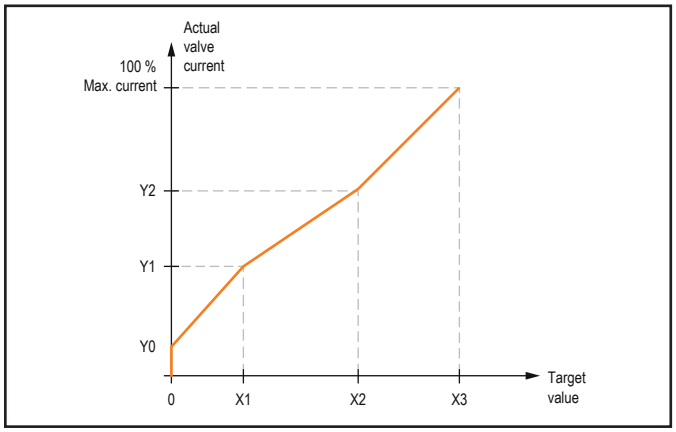

Example characteristic curve

Example: 1:1 scaling

It may be desirable that the target value in the process output data corresponds to the actual current in mA. This behaviour can be realised by a suitable characteristic curve.

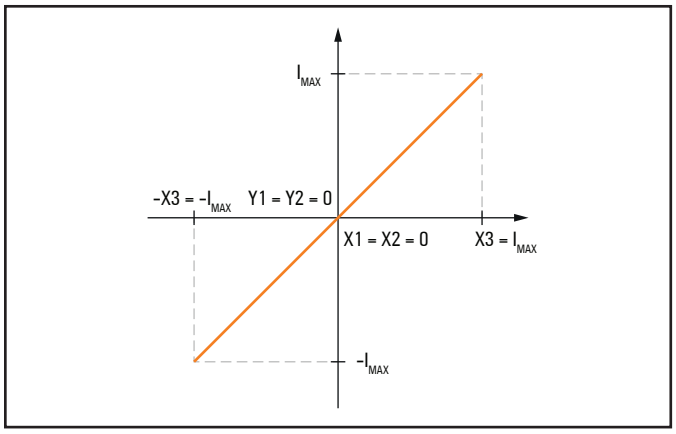

Characteristic curve for 1:1 scaling

Parameter	value
Max. output current	maximum output current
Full scale value (X3)	maximum output current
Valve characteristic Y0	0
Valve characteristic X1	0
Valve characteristic Y1	0
Valve characteristic X2	0
Valve characteristic Y2	0

Analogously, other scalings can also be implemented, e.g. 0 ... 100 %.

Example: Dead zone compensation
Many proportional valves need a minimum current to open the valve. This dead zone can be compensated by a suitable characteristic curve.

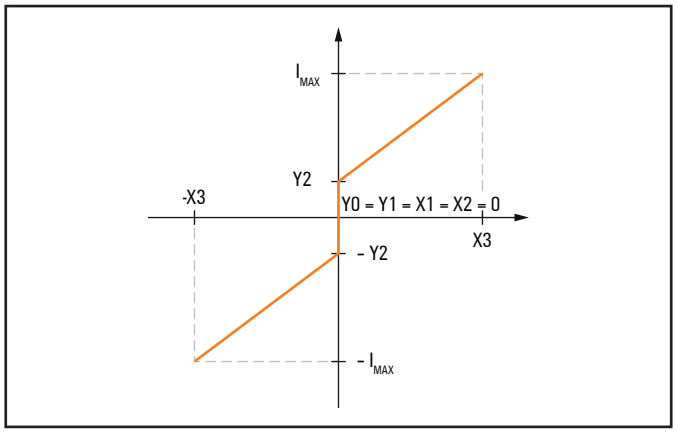

Characteristic curve for dead zone compensation

Parameter	value
Max. output current	maximum output current
Full scale value (X3)	desired full scale value
Valve characteristic Y0	0
Valve characteristic X1	0
Valve characteristic Y1	0
Valve characteristic X2	0
Valve characteristic Y2	minimum required current

Dithering

Dithering is activated with the process output date **Enable dithering**. When dithering is activated, a square-wave signal is superimposed on the target value. This square-wave signal shall prevent static friction in the connected actuator as long as the target value does not change. The amplitude and frequency of the square-wave signal as well as a switch-off ramp can be parameterised.

Parameter Dithering Frequency
The **Dithering frequency** parameter sets the frequency of the dithering signal in Hz.

Parameter Dithering Amplitude
The parameter **Dithering Amplitude** is used to set the amplitude of the dithering signal as a percentage of the current target value.

The output current including the dithering signal never exceeds 3 A. The dithering signal is always symmetrical to the current target value.

Due to different rise and fall times of the output current, the average value of the output current may not correspond to the target value.

Parameter Dithering switch-off ramp
The parameter **Dithering switch-off ramp** is used to set the time for changes in the dithering amplitude in ms. During this time, the dithering amplitude changes linearly from the original value to the new value. If dithering is deactivated while the process date **Enable dithering ramp** is set, the dithering amplitude decreases over the set time.

Controller mode

Various controller modes can be set via the **Controller mode** parameter.

ATTENTION

Module or actuator can be destroyed!
In the controller mode **Current control 2-wire**, the voltage is reversed. With loads that must not be reversed, this can damage the load or the module.

► The setting **Current control 2-wire** may only be used for loads that may be connected bipolar in 2-wire connection.

Current control
In this mode, the current in the connected load is regulated to the set value. Always select this mode when the load is connected to the common return conductor.

Current control 2-wire
In this mode, the current in the connected load is regulated to the set value. The current can be reduced more quickly by internally connecting an opposite voltage (fast decay). This setting may only be used for loads that are connected bipolar in 2-wire connection.

Pulse/period ratio
In this mode, the output operates with a fixed duty cycle, corresponding to the target value.
Duty cycle = Target value / Full scale value x 100 %
The polarity corresponds to the sign of the target value.

In this mode, the module does not control the output current but controls the output voltage. Neither the valve characteristic curve nor the dithering are applied. The frequency/period duration cannot be adjusted. The current measurement as well as the overload protection remain active.

Selecting controller parameters

The current control of the module uses a built-in PI controller. The controller constants set as default should lead to a stable control behaviour. If necessary, the control behaviour can be optimised using the parameters **Integrator constant** and **Proportional constant**.

⚠ WARNING

Danger to life possible!
In the method presented here, the controller parameters are determined by systematic trial and error on the operational plant. In the process, plant components can be set in motion and cause potentially fatal injuries.

- ► If possible, switch off all system parts that are not required for the design of the controller.
- ► Secure the system against people entering the danger zone unnoticed!

The following instructions describe the selection of the controller parameters according to the compensation method. You can choose other design methods.

Prerequisites:
- The module is fully assembled and ready for operation.
- The load is connected to the module and ready for operation.
- The parameters **Integrator constant** and **Proportional constant** are set to their respective default values.
- You can control the target value of the controlled variable, e.g. via the process output data.
- You can observe the current value of the controlled variable, e.g. with a current clamp and an oscilloscope.

► Determine the resistance R and the inductance L of the load.

First, determine the integrator constant, the gain of the I component of the controller. The I component of the controller primarily ensures the steady-state accuracy of the control. With the choice of the integrator constant, the dominant time constant of the load is compensated. The integrator constant is the reciprocal of the reset time.

► Calculate the integrator constant $C_{I,}$ with this formula:

$$C_{I,calc} = \frac{R\,[\Omega]}{U_{OUT}\,[V]} \times 1000$$

Example: $R_{Valve} = 3\ \Omega$, $U_{OUT} = 24\ V$

$$C_{I,calc} = \frac{3}{24} \times 1000 = 125$$

► Set the **Integrator constant** parameter to 0,5 × $C_{I,calc}$.
► Switch on a step change in the controlled variable, e.g. by dithering with low frequency and high amplitude with a static target value. Observe the step response.
► Carefully increase the parameter **Integrator constant** until the step response shows the desired behaviour. The value of the integrator constant is too high if the step response overshoots.

Then select the proportionality constant of the controller. The proportionality constant speeds up the regulation and compensates for the load's inertia, delay and time constant as well as internal digitisation effects.

► Calculate the proportional constant C_P with this formula:

$$C_{P,calc} = \frac{L\,[H]}{U_{OUT}\,[V]} \times 10^6 = \frac{L\,[mH]}{U_{OUT}\,[V]} \times 1000$$

Example: $L_{Valve} = 6$ mH, $U_{OUT} = 24$ V

$$C_{P,calc} = \frac{6}{24} \times 1000 = 250$$

► Set the parameter **Proportional constant** to 0,5 × $C_{P,calc}$.
► Switch on a step change in the controlled variable. Observe the step response.
► Carefully increase the **Proportional constant** parameter until the step response shows the desired behaviour.

6.37 Stepper motor module UR20-1SM-50W-6DI2DO-P

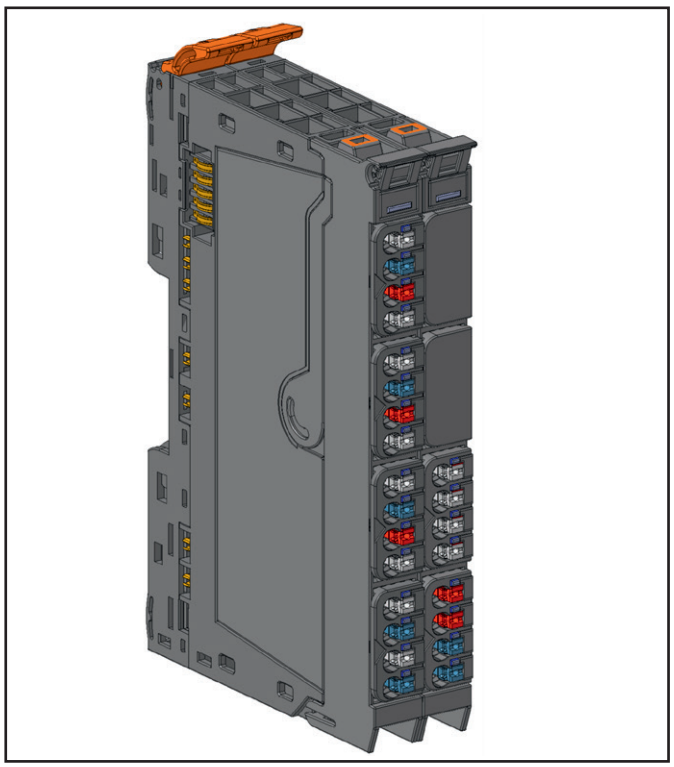

Stepper motor modul UR20-1SM-50W-6DI2DO-P (Item No. 2489830000)

The stepper motor module UR20-1SM-50W-6DI2DO-P with integrated power amplifier can control a 2-phase stepper motor directly. Additionally, the module can detect up to 6 binary control signals and control up to 2 actuators each with a maximum of 0.5 A. The inputs DI 4 and DI 5 are capable of processing encoder signals (AB mode).
Two sensors can be connected to each connector 1 to 3 using a 2-wire or 3-wire connection. Two actuators can be connected to connector 4 in a 2-wire-connection. The stepper motor is connected to connector 7. An external power supply is connected to connector 8. A status LED is assigned to each channel.
Via a configuration application in the webserver, the drive system can be configured and motion sequences can be programmed.
The module electronics supply the connected sensors with power from the input current path (I_{IN}) and the actuators with power from the output current path (I_{OUT}). The motor and the module electronics are fed by the external power supply (12 V ... 50 V). The external power supply must be separately protected against overcurrents.

Interruption of the power supply for less than 1 ms has no impact. In the case of longer interruptions the bus communication will be shut off.

If the stepper motor module is used with a safe supply module (UR20-PF-O-X-SIL):

► Note that only the digital outputs of the stepper motor module are safely switched off. Make sure that the external power supply is switched off in the event of a failure.

Detailed informationen about the UR20 stepper motor modul can be found in the **Stepper motor module UR20-1SM-50W-6DI2DO-P manual.** You can find the document in the Weidmüller Support Center.

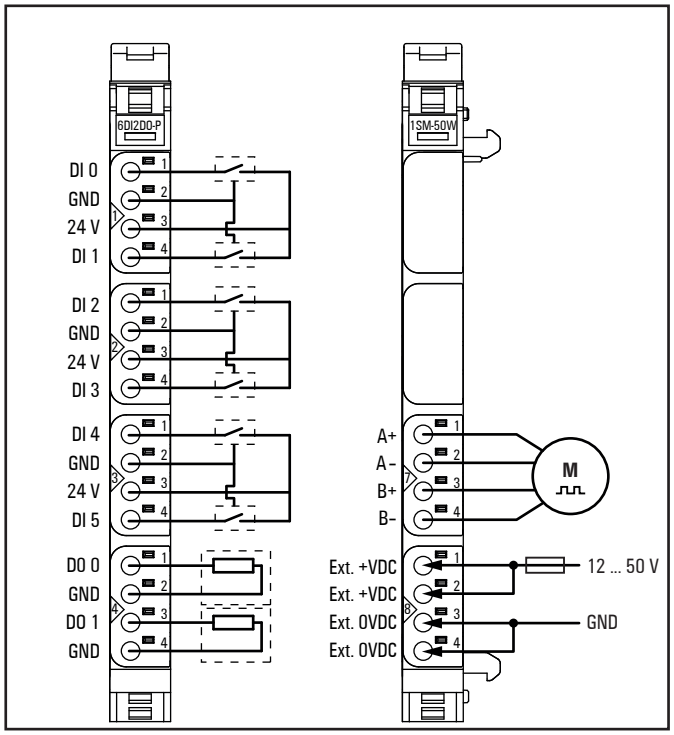

Connection diagram UR20-1SM-50W-6DI2DO-P

	Assignment	Function/connection
1.1	DI 0	Digital input
1.2	GND	0 V (U_{IN})
1.3	24 V	24 V (U_{IN})
1.4	DI 1	Digital input
2.1	DI 2	Digital input
2.2	GND	0 V (U_{IN})
2.3	24 V	24 V (U_{IN})
2.4	DI 3	Digital input
3.1	DI 4	Digital input
3.2	GND	0 V (U_{IN})
3.3	24 V	24 V (U_{IN})
3.4	DI 5	Digital input
4.1	DO 0	Digital output
4.2	GND	0 V (U_{OUT})
4.3	DO 1	Digital output
4.4	GND	0 V (U_{OUT})

	Assignment	Function/connection
7.1	A+	Motor, phase A, plus
7.2	A -	Motor, phase A, minus
7.3	B+	Motor, phase B, plus
7.4	B -	Motor, phase B, minus
8.1	Ext. +VDC	12 V ... 50 V (external)
8.2	Ext. +VDC	12 V ... 50 V (external)
8.3	Ext. 0VDC	0 V (external)
8.4	Ext. 0VDC	0 V (external)

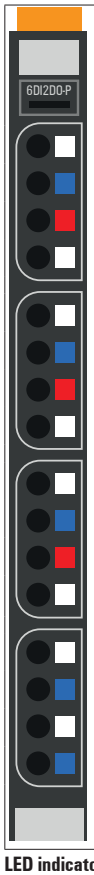

	Modul status LED Green: Communication on system bus Red: Error
1.1	Yellow: Input 0 active
1.4	Yellow: Input 1 active
2.1	Yellow: Input 2 active
2.4	Yellow: Input 3 active
3.1	Yellow: Input 4 active
3.4	Yellow: Input 5 active
4.1	Yellow: Output 0 active
4.4	Yellow: Output 1 active

LED indicators UR20-1SM-50W-6DI2DO-P, troubleshooting see Chapter 12



	Modul status LED Green: Communication on system bus Red: Error
7.1	Yellow: Phase A active
7.2	Red: Phase A error
7.3	Yellow: Phase B active
7.4	Red: Phase B error
8.1	Green: external power supply OK
8.2	Red: external power supply error

LED indicators UR20-1SM-50W-6DI2DO-P, troubleshooting see Chapter 12

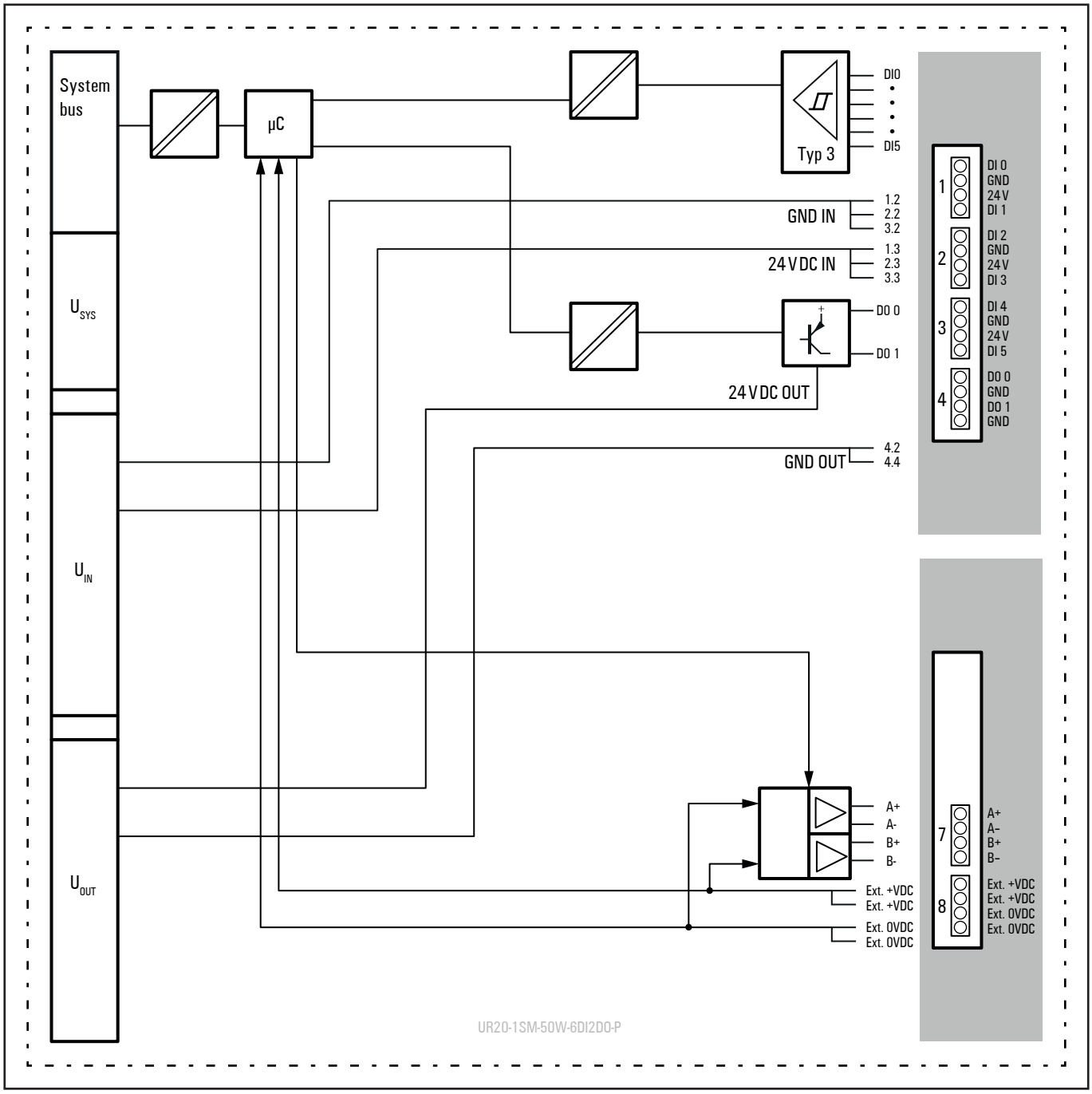

Block diagram UR20-1SM-50W-6DI2DO-P

Technical data UR20-1SM-50W-6DI2DO-P (Best.-Nr. 2489830000)

System data	
Data	Process, parameter and diagnosticdata depend on the coupler used, see coupler description.
Interface	u-remote system bus
System bus transfer rate	48 MBit/s
Modul diagnosis	yes
Galvanic isolation	500 V DC between current paths
Stepper motor connections A+, A-, B+, B-	
Number	1 channel, 2 phases
Supply, amplifier	external power supply entry, external protection necessary
Power	typ. max. 50W, the maximum power is subject to derating, see derating curves page 426
max. current load	see derating curves page 426
Over load protection	yes
Short-circuit-proof	yes
Individual channel diagnosis	yes
Connection	4-wire
Cable length	< 30 m, shielded
Inputs DI 0 ... DI 3	
Number	4
Input type	P-switching, for type 1 and 3 type 3 sensors as per IEC 61131-2
Input filter	Input delay adjustable to 0 or 5 ms
Low input voltage	< + 5 V referred to 0 V of input voltage U_{IN}
High input voltage	> + 11 V referred to 0 V of input voltage U_{IN}
Low input current	≤ 1.5 mA
High input current	≥ 2.5 mA (2-wire sensor)
Sensor supply	max. 1 A per plug
Sensor connection	2-wire, 3-wire
Reverse polarity protection	yes
Cable length	< 30 m, shielded
Individual channel diagnosis	no
Inputs DI 4 ... DI 5	
Number	2
Input type	Input characteristics for sensor types 1 and 3 are in accordance with EN 61131-2, suitable incremental encoders, P-switching
Input filter	Filter time adjustable to 0 or 5 ms
Maximum input frequency	100 kHz
Mode of operation	AB mode with 4-times sampling
Low input voltage	< + 5 V referred to 0 V of input voltage U_{IN}
High input voltage	> + 11 V referred to 0 V of input voltage U_{IN}
Low input current	≤ 1.5 mA
High input current	≥ 2.5 mA (2-wire sensor)
Sensor supply	max. 1 A per plug

Technical data UR20-1SM-50W-6DI2DO-P (Best.-Nr. 2489830000)

Sensor connection	2-wire, 3-wire	
Reverse polarity protection	yes	
Cable length	< 30 m, shielded	
Individual channel diagnosis	no	
Outputs DO 0... DO 1		
Number	2	
Output Type	P-switching, as per IEC 61131-2	
Type of load	ohmic, inductive, lamp load	
Response time	low » high max. 100 µs; high » low max. 250 µs	
Max output current	per channel	0.5 A
	per module	1 A
Breaking energy (inductiv)	150 mJ per channel	
Switching frequency	Ohmic load (min. 47 Ω)	1 kHz
	Inductive load (DC 13)	0.2 Hz without free-wheeling diode 1kHz with suitable free-wheeling diode
	Lamp load (12 W)	1kHz
Actuator connection	2-wire	
High input voltage	min. Uout - 1 V	
Low output current	≤ 0,5 mA	
High output current	nominal 500 mA	
Short-circuit-proof	yes	
Protective circuit	Constant current with thermal switch-off and automatic restart	
Response time of the current limiting circuit	< 100 µs	
Individual channel diagnosis	no	
Can be used with PF-O-xDI-SIL	yes	
MTTF	53.74 years	
Supply		
Supply voltage U_{SYS}	3.6 V DC ... 6.5 V DC	
Supply voltage U_{IN}	24 V DC +20 %/-15 %	
Supply voltage U_{OUT}	24 V DC +20 %/-15 %	
External supply voltage	12 V DC ... 50 V DC	
Current consumption from system current path I_{SYS}	8 mA	
Current consumption from input current path I_{IN}	27 mA + sensor supply current	
Current consumption from output current path I_{OUT}	10mA + load	
Current consumption from external power supply	35 mA + load (at 24 V DC)	
General data		
Weight (operational status)	173 g	
Dimensions	Height	120.0 mm / 4.72″ (with release lever 128.0 mm / 5.04″)
	Width	23.0 mm / 0.9″
	Depth	76.0 mm / 2.99″
For additional general data, see Section 3.4		

Derating curves

The maximum power can be determined from the derating curves.

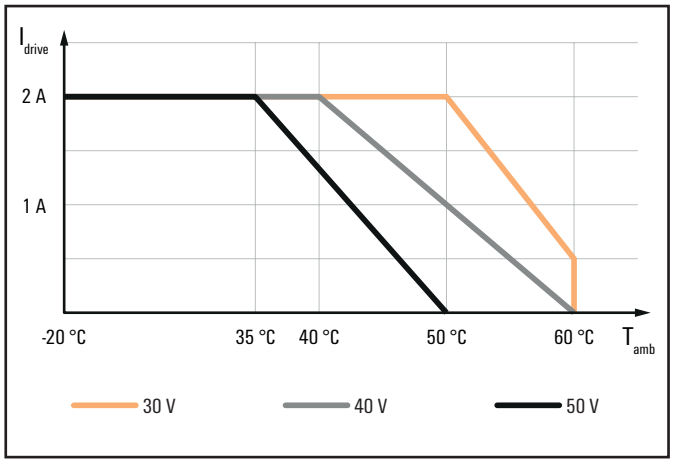

UR20-1SM-50W-6DI2DO-P derating curve with horizontal installation

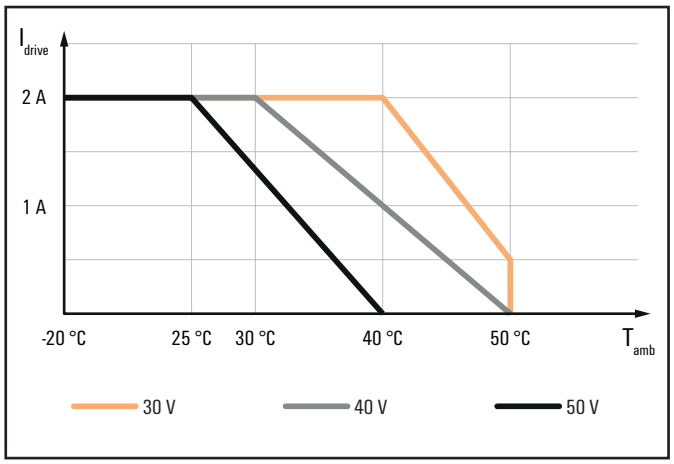

UR20-1SM-50W-6DI2DO-P derating curve with vertical installation

Overview of the editable parameters UR20-1SM-50W-6DI2DO-P

Channel	Description	Options[1)]	Default	Remark
8	Start/Stopp frequency f_{ss}	5 (0) / 10 (1) / 20 (2) / 50 (3) / 100 (4) / 200 (5) / 500 (6) / 750 (7) / 1000 (8) / 1250 (9) / 1500 (10) / 1750 (11) / 2000 (12)/ 2500 (13)	1000	in increments/s
8	Factor f_{max}	1 ... 255	1	$f_{max} = f_{ss} \times$ Factor
8	Max. acceleration	1 ... 100	50	in %
8	Micro steps	1 (0) / 2 (1) / 4 (2) / 8 (3) / 16 (4) / 32 (5) / 64 (6) / 128 (7)/ 256 (8)	4	in increments
8	Traversing range	-2147483648 ... 2147483647	1000	in increments
8	Drive current	0 ... 228	127	in 10 mA, max. 2.28 A
8	Soft start factor[2)]	0 ... 100	0	in %
8	Factor break current	×1 (0) / ×1,25 (1) / ×1,5 (2) / ×1,75 (3) / ×2 (4) / ×2,25 (5) / ×2,5 (6)	1	
8	Factor boost current	×1 (0) / ×1,25 (1) / ×1,5 (2) / ×1,75 (3) / ×2 (4) / ×2,25 (5) / ×2,5 (6)	1	
8	Max. overcurrent duration	0 (0) / 5 (1) / 10 (2) / 20 (3) / 50 (4) / 100 (5) / 200 (6) / 500 (7) / 750 (8) / 1000 (9) / 1250 (10) / 1500 (11)/ 1750 (12) / 2000 (13)/ 2500 (14)	0	in ms
8	Axis mode	Linear (0) / Modulo[2)] (1)	Linear	
–	Diagnostic alarm	disabled (0) / enabled (1)	disabled	
0	Function DI	Ref.switch left/ccw (0) / Ref.switch right/cw (1) / Digital input (2)	Digital input	
0	Inversion	disabled (0) / enabled (1)	disabled	
0	Filter time	no (0) / 5 ms (1)	no	
1	Function DI	Zero track (0) / Digital input (1)	Digital input	
1	Inversion	disabled (0) / enabled (1)	disabled	
1	Filter time	no (0) / 5 ms (1)	no	
2	Function DI	Jog right/cw (0) / Tip right/cw (1) / Digital input (2)	Digital input	
2	Filter time	no (0) / 5 ms (1)	no	
3	Function DI	Jog left/ccw (0) / Tip left/ccw (1) / Digital input (2)	Digital input	
3	Filter time	no (0) / 5 ms (1)	no	
4	Function DI	Encoder Sig. A (0) / Digital input (1) / Limit switch right/cw (2)	Digital input	
4	Filter time	no (0) / 5 ms (1)	no	
5	Function DI	Encoder Sig. B (0) / Digital input (1) / Limit switch left/ccw (2)	Digital input	
5	Filter time	no (0) / 5 ms (1)	no	
6	Function DO	Digital output (0) / Position reached (1) / Position not reached (2)	Digital output	
7	Function DO	Digital output (0) / Position reached (1) / Position not reached (2)	Digital output	
8	Encoder function	Enc.Pos. in process data (0) / tracking control (1) / disabled (2)	disabled	
8	Homing	Stop on Ref.switch 0→1 (0) / Stop on Ref.switch 1→0 (1) / Stop on homing bit 1→0 (2)	Stop on Ref. switch 0→1t	
8	Encoder resolution	0 ... 65535	1000	steps/revolution
8	Full steps stepper motor/rev.	0 ... 65535	200	
8	Contouring error	0 ... 100	1	in % of the step resolution of the motor

1) Values in brackets for Modbus-TCP (firmware version 02.00.00 and higher), CANopen, EtherCAT and EtherNet/IP via module parameter class
2) Reserved for future firmware versions

Diagnostic data UR20-1SM-50W-6DI2DO-P

Name	Bytes	Bit	Description	Default
Error indicator	0	0	Module error	0
		1	Internal error	0
		2	External error	0
		3	Channel error	0
		4	Error	0
		5	Power supply fault	0
		6	Reserved	0
		7	Parameter error	0
Module type	1	0	Module Type 0x08	1
		1		1
		2		1
		3		0
		4	Reserved	1
		5	Reserved	0
		6	Reserved	0
		7	Reserved	0
Error byte 2	2	0 ... 7	Reserved	0
Error byte 3	3	0 ... 2	Reserved	0
		3	Reserved	0
		4	Communication fault	0
		5	Reserved	0
		5	Vin error	0
		7	Vout error	0
Channel type	4	0	Channel type 0x7D	1
		1		0
		2		1
		3		1
		4		1
		5		1
		6		1
		7	Reserved	0
Diagnostic bits per channel	5		Number of diagnostic bit per channel	8
Number of channels	6			10
Channel error	7	0 ... 7	Reserved	0
	8	0	Error at channel 8	
		1	Error at channel 9	
		2 ... 7	Reserved	0
	9 ... 10		Reserved	0
Channel 0 error to Channel 7 error	11 ... 18	0 ... 7	Reserved	0

Diagnostic data UR20-1SM-50W-6DI2DO-P

Name	Bytes	Bit	Description	Default
Channel 8 error	19	0	Overtemp shutdown	0
		1	Overcurrent Ch A	0
		2	Overcurrent Ch B	0
		3	Undervoltage Lockout	0
		4	Acceleration exceeded	0
		5	Velocity exceeded	0
		6	Contouring error exceeded	0
		7	Traversing range exceeded	0
Channel 9 error	20	0	Vext error	0
		1 ... 7	Reserved	0
Channel 10 error to Channel 31 error	21 ... 42	0 ... 7	Reserved	0
Time stamp	43-46		time stamp [µs] (32bit)	

Process data inputs UR20-1SM-50W-6DI2DO-P

Byte	Format	Bit	Description	Comment
IB0 ... IB3	Double Word	IX0.0 ... IX3.7	Current position	Current position in increments
IB4 ... IB5	Word	IX4.0 ... IX5.7	Current velocity	Current velocity in increments/s
IB6	Byte	IX6.0 ... IX6.7	-	-
IB7	Byte	IX7.0 ... IX7.7	-	-
IB8	Byte	IX8.0	State DI 0	0 = low, 1 = high
		IX8.1	State DI 1	0 = low, 1 = high
		IX8.2	State DI 2	0 = low, 1 = high
		IX8.3	State DI 3	0 = low, 1 = high
		IX8.4	State DI 4	0 = low, 1 = high
		IX8.5	State DI 5	0 = low, 1 = high
		IX8.6	State DO 0	0 = low, 1 = high
		IX8.7	State DO 1	0 = low, 1 = high
IB9	Byte	IX9.0	State homing	0 = homing not made, 1 = homing made
		IX9.1	State moving	0 = stopped, 1 = running
		IX9.2	State direction	0 = right/cw, 1 = left/ccw
		IX9.3	State target position	0 = not reached, 1 = reached
		IX9.4	Max traversing exceeded	0 = no, 1 = yes
		IX9.5	Max acceleration exceeded	0 = no, 1 = yes
		IX9.6	Stepper motor driver	0 = OK, 1 = Error
		IX9.7	State power supply	0 = undervoltage, 1 = OK
IB10	Byte	IX10.0	Register address[1)]	
		IX10.1		
		IX10.2		
		IX10.3		
		IX10.4	Moving sets taken over[1)]	
		IX10.5	Register write acknowledge[1)]	
		IX10.6	Register write accepted[1)]	
		IX10.7	Register read abort[1)]	
IB11	Byte	IX11.0 ... IX11.7	Register read adress[1)]	
IB12 ... IB15	Double Word	IX12.0 ... IX15.7	Register read data[1)]	

1) Reserved for future firmware versions

Process data outputs UR20-1SM-50W-6DI2DO-P

Byte	Format	Bit	Description	Comment
QB0 ... QB3	Double Word	QX0.0 ... QX3.7	Target position	Target position in increments or set current position in increments or load value encoder in increments
QB4 ... QB5	Word	QX4.0 ... QX5.7	Target velocity	Target velocity in increments/s
QB6 ... QB7	Word	QX6.0 ... QX7.7	Target acceleration	Target acceleration in increments/s^2
QB8	Byte	QX8.0	Acceleration	0 = constant, 1 = linear[1)], 2 = optimal[1)], 3 = reserved
		QX8.1		
		QX8.2	Moving mode	0 = absolute, 1 = relative, 2 = motion profile[1)], 3 = reserved
		QX8.3		
		QX8.4	Moving time-optimized[1)]	0 = disabled, 1 = enabled
		QX8.5	Position change	0 = off, 1 = on
		QX8.6	Set DO 0	0 = low, 1 = high
		QX8.7	Set DO 1	0 = low, 1 = high
QB9	Byte	QX9.0	Homing	0 = disabled, Edge 0-1 = start homing
		QX9.1	Moving	0 = disabled, Edge 0-1 = start moving
		QX9.2	Set encoder value	Edge 0-1 = start load value encoder
		QX9.3	Set current position	Edge 0-1 = start load current position
		QX9.4	Jog right/cw	0 = disabled, 1 = Jog right/cw
		QX9.5	Jog left/ccw	0 = disabled, 1 = Jog left/ccw
		QX9.6	Acknowledge error motor driver	0 = disabled, 1 = acknowledge
		QX9.7	Enable motor driver	0 = off, 1 = on
QB10	Byte	QX10.0	Register address[1)]	
		QX10.1		
		QX10.2		
		QX10.3		
		QX10.4	Control bit write more moving sets[1)]	
		QX10.5	-	
		QX10.6	Register read or write[1)]	
		QX10.7	Register access request[1)]	
QB11	Byte	QX11.0 ... QX11.7	Register write adress[1)]	
QB12 ... QB15	Double Word	QX12.0 ... QX15.7	Register write data[1)]	

1) Reserved for future firmware versions

6.38 Analogue input module UR20-2AI-UI-16

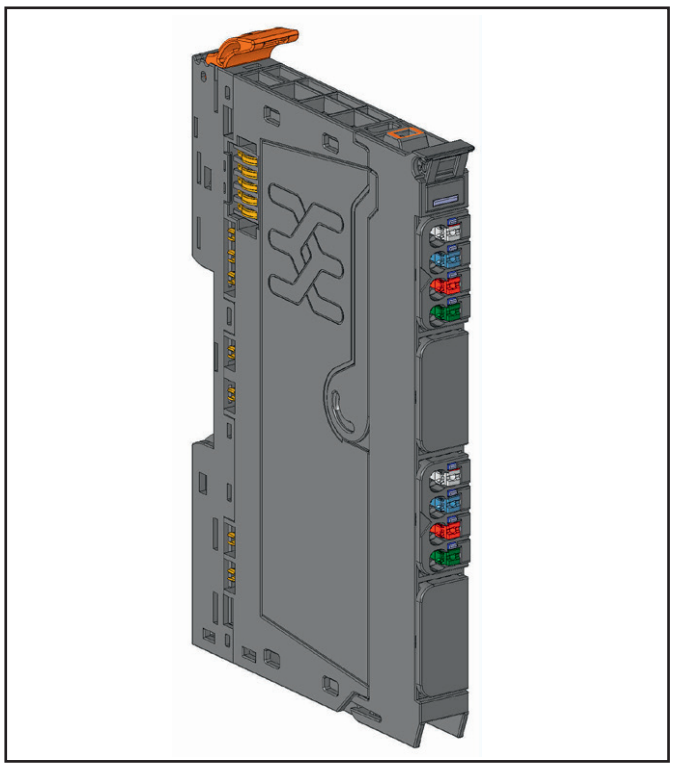

Analogue input module UR20-2AI-UI-16 (Item No. 2705620000)

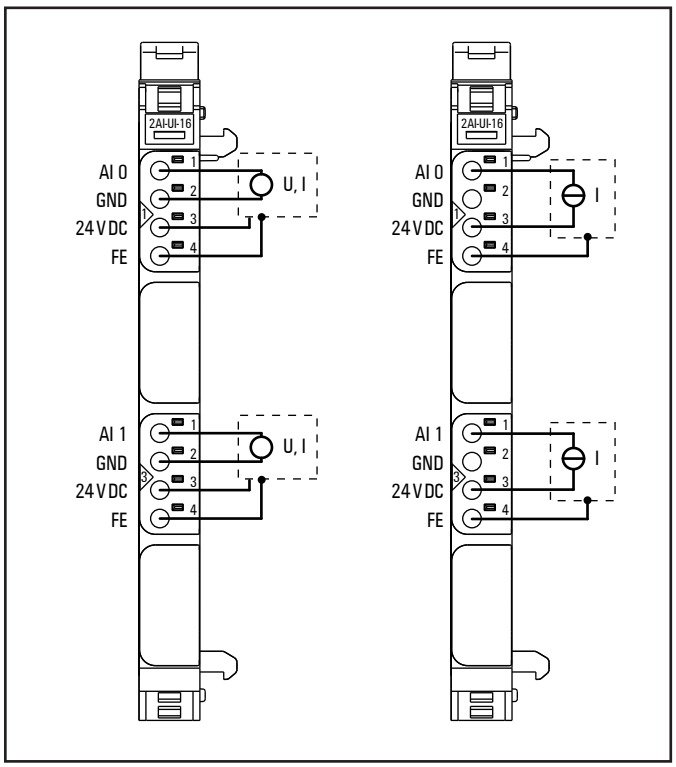

Connection diagram UR20-2AI-UI-16 (left 3/4-wire sensor with signal wiring and sensor supply via module electronics, right: 2-wire sensor loop powered by module electronics)

The UR20-2AI-UI-16 analogue input module can record up to 2 analogue sensors with ±10 V, ±5 V, 0 ... 10 V, 0 ... 5 V, 2 ... 10 V, 1 ... 5 V, 0 ... 20 mA or 4 ... 20 mA. The resolution is 16 bit per channel. Sensors can be connected to each connector in a 2-wire, 3-wire or 3-wire connection + FE. The measurement range is defined using parameterisation. A status LED is assigned to each channel. The module electronics supply the connected sensors with power from the input current path (I_{IN}).

The inputs are protected against voltage surges and overcurrent. Voltages that exceed ±30 V may cause the destruction of the module. As a protection against overcurrent, the module temporarily switches to voltage mode.



	Module status LED Green: Communication over the system bus Red: Error
1.1	Red: channel error
3.1	Red: channel error

LED indicators UR20-2AI-UI-16, troubleshooting see Chapter 12

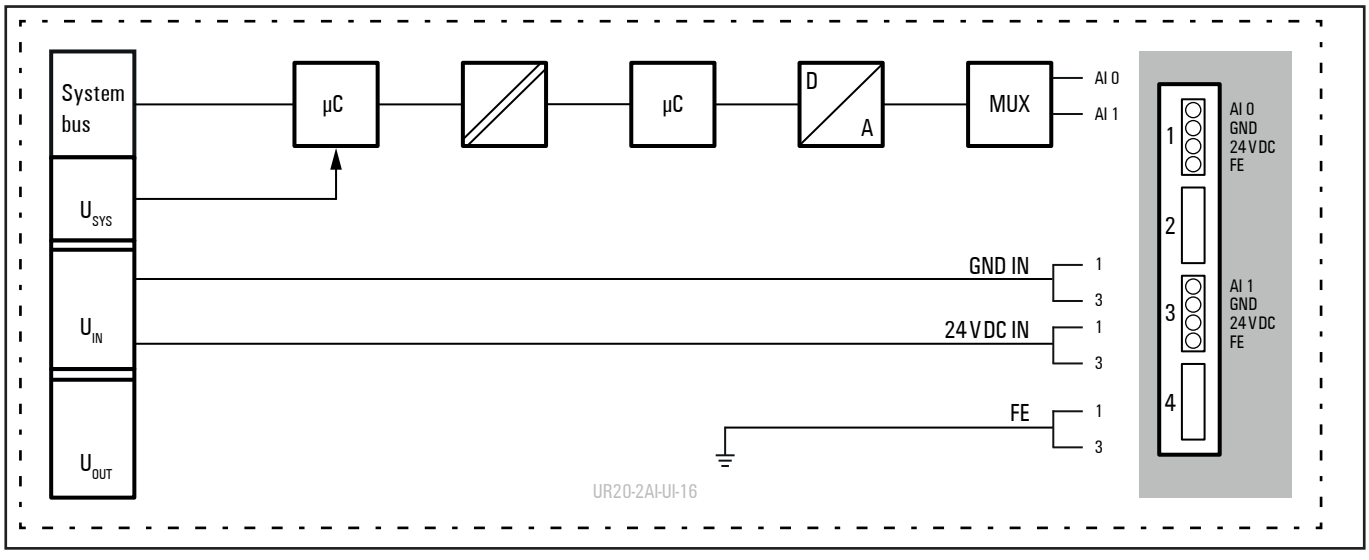

Block diagram UR20-2AI-UI-16

Technical data UR20-2AI-UI-16 (Item No. 2705620000)

System data		
Data	Process, parameter and diagnostic data depend on the coupler used, see coupler description.	
Interface	u-remote system bus	
System bus transfer rate	48 Mbps	
Inputs		
Number	2	
Input values	1. Voltage (0 ... 5 V, ±5 V, 0 ... 10 V, ±10 V, 1 ... 5 V, 2 ... 10 V) 2. Current (0 ... 20 mA, 4 ... 20 mA)	
Resolution	16 bits	
Accuracy	0.1 % max. ±50 ppm/K max. max. +10 mV/A	at 25 °C Temperature coefficient additional inaccuracy in the voltage mode due to sensor power supply current
Sensor supply	max. 2 A per plug, total max. 4 A	
Sensor connection	2-wire, 3-wire, 3-wire + FE	
Conversion time	1 ms	
Internal resistance	U: typ. 100 kΩ; I: < 50 Ω	
Reverse polarity protection	yes	
Short-circuit-proof	yes	
Response time of the protective circuit	< 50 ms	
Module diagnosis	yes	
Individual channel diagnosis	no	
Supply		
Supply voltage	24 V DC +20 %/-15 %	
Current consumption from system current path I_{SYS}	8 mA	
Current consumption from input current path I_{IN}	25 mA + sensor supply current	
General data		
Weight (operational status)	96 g	
For additional general data, see Section 3.4		

Overview of the editable parameters UR20-2AI-UI-16

Channel	Description	Options[1)]	Default
	Frequency suppression	disabled (0) / 50 Hz (1) / 60 Hz (2) / Average over 16 values (3) / 2 Hz low pass (4)	disabled
0 ... 1	Data format	S5 Data format (0) / S7 Data format (1)	S7 Data format
0 ... 1	Measurement range	0 to 20 mA (0) / 4 to 20 mA (1) / 0 V to 10 V (2) / -10 to 10 V (3) / 0 to 5 V (4) / -5 to 5 V (5) / 1 to 5 V (6) / 2 to 10 V (7) /disabled (8)	disabled

1) Values in brackets for Modbus-TCP (firmware version 02.00.00 and higher), CANopen, EtherCAT and EtherNet/IP via module parameter class

Diagnostic data UR20-2AI-UI-16

Name	Bytes	Bit	Description	Default
Error indicator	0	0	Module error	
		1	Internal error	
		2	External error	
		3	Channel error	0
		4	Error	
		5	Power supply fault	0
		6	Reserved	0
		7	Parameter error	
Module types	1	0	Module Type	0x05
		1		
		2		
		3		
		4	Reserved	0
		5	Reserved	0
		6	Reserved	0
		7	Reserved	0
Error byte 2	2	0 ... 7	Reserved	0
Error byte 3	3	0 ... 2	Reserved	0
		3	Internal diagnostic FIFO full	
		4	Power supply fault	
		5	Reserved	0
		6	Reserved	0
		7	Reserved	0
Channel type	4	0 ... 6	Channel type	0x74
		7	Reserved	0
Diagnostic bits per channel	5		Number of diagnostic bit per channel	8
Number of channels	6		Number of similar channels per module	2
Channel error	7 ... 10	0 ... 31	Reserved	0
Channel 0 error to Channel 31 error	11 ... 42	0 ... 7	Reserved	0
Time stamp	43-46		time stamp [µs] (32bit)	

Process data[1] inputs UR20-4AI-UI-12

Byte	Format	Description	Remarks
IB0	Word	AI0	
IB1			
IB2	Word	AI1	
IB3			

1) Internal process data mapping with data format "Standard". Depending on the fieldbus specification and the data format of the communicating fieldbus components the bytes and/or words can be reversed during data transfer.

A diagnosis is indicated when a diagnosis limit value has been exceeded.

Diagnosis limit values

Measurement range	Lower limit	Upper limit
0 ... 20 mA	-	21 mA
4 ... 20 mA	3.6 mA	21 mA
0 ... 10 V	-	10.5 V
2 ... 10 V	1.8 V	10.5 V
±10 V	-10.5 V	10.5 V
0 ... 5 V	-	5.25 V
1 ... 5 V	0.9 V	5.25 V
±5 V	-5.25 V	5.25 V

Measurement range UR20-2AI-UI-16

Measurement range	Current (I) / Voltage (U)	Decimal (D)	Hexadecimal	Range	Conversion
0 – 20 mA Siemens S7 format	23.52 mA	32511	0x7EFF	Overloading	D = 27648 x I / 20 I = D x 20 / 27648
	20 mA	27648	0x6C00	Nominal range	
	10 mA	13824	0x3600		
	0 mA	0	0x0000		
0 – 20 mA Siemens S5 format	23.52 mA	19268	0x4B44	Overloading	D = 16384 x I / 20 I = D x 20 / 16384
	20 mA	16384	0x4000	Nominal range	
	10 mA	8192	0x2000		
	0 mA	0	0x0000		
4 – 20 mA Siemens S7 format	22.81 mA	32511	0x7EFF	Overloading	D = 27648 x (I – 4) / 16 I= D x 16 / 27648 + 4
	20 mA	27648	0x6C00	Nominal range	
	12 mA	13824	0x3600		
	4 mA	0	0x0000		
	1.19 mA	-4864	0xED00	Underloading	
4 – 20 mA Siemens S5 format	22.82 mA	19268	0x4B44	Overloading	D = 27648 x (I – 4) / 16 I = D x 16 / 16384 + 4
	20 mA	16384	0x4000	Nominal range	
	12 mA	8192	0x2000		
	4 mA	0	0x0000		
	0.8 mA	-3277	0xF333	Underloading	
0 – 10 V Siemens S7 format	11.76 V	32511	0x7EFFh	Overloading	D = 27648 x U/10 U = D x 10 / 27648
	10 V	27648	0x6C00	Nominal range	
	5 V	13824	0x3600		
	0 V	0	0x0000		
0 – 10 V Siemens S5 format	11.76 V	19268	0x4B44	Overloading	D = 16384 x U / 10 U = D x 10 / 16384
	10 V	16384	0x4000	Nominal range	
	5 V	8192	0x2000		
	0 V	0	0x0000		
±10 V Siemens S7 format	11.76 V	32511	0x7EFF	Overloading	D = 27648 x U / 10 U = D x 10 / 27648
	10 V	27648	0x6C00	Nominal range	
	5 V	13824	0x3600		
	0 V	0	0x0000		
	-5 V	-13824	0xCA00		
	-10 V	-27648	0x9400		
	-11.76 V	-32511	0x8100	Underloading	

Measurement range UR20-2AI-UI-16

Measurement range	Voltage (U)	Decimal (D)	Hexadecimal	Range	Conversion
±10 V Siemens S5 format	11,76 V	19268	0x4B44	Overloading	D = 16384 x U / 10 U = D x 10 / 16384
	10 V	16384	0x4000	Nominal range	
	5 V	8192	0x2000		
	0 V	0	0x0000		
	-5 V	-8192	0xE000		
	-10 V	-16384	0xC000		
	-11,76 V	-19268	0xB4BC	Underloading	
2 ... 10 V Siemens S7 format	11,41 V	32511	0x7EFF	Overloading	D = 27648 x (U – 2) / 8 U = D x 8 / 27648 + 2
	10 V	27648	0x6C00	Nominal range	
	6 V	13824	0x3600		
	2 V	0	0x0000		
	0,59 V	-4864	0xED00	Underloading	
2 ... 10 V Siemens S5 format	11,41 V	19268	0x4B44	Overloading	D = 16384 x (U – 2) / 8 U = D x 8 / 16384 + 2
	10 V	16384	0x4000	Nominal range	
	6 V	8192	0x2000		
	2V	0	0x0000		
	0,40 V	-3277	0xF333	Underloading	
1 ... 5 V Siemens S7 format	5,7 V	32511	0x7EFF	Overloading	D = 27648 x (U – 1) / 4 U = D x 4 / 27648 + 1
	5 V	27648	0x6C00	Nominal range	
	3 V	13824	0x3600		
	1 V	0	0x0000		
	0,30 V	-4864	0xED00	Underloading	
1 ... 5 V Siemens S5 format	5,7 V	19268	0x4B44	Overloading	D = 16384 x (U – 1) / 4 U = D x 4 / 16384 + 1
	5 V	16384	0x4000	Nominal range	
	3 V	8192	0x2000		
	1 V	0	0x0000		
	0,20 V	-3277	0xF333	Underloading	
0 ... 5 V Siemens S7 format	5,88 V	32511	0x7EFF	Overloading	D = 27648 x U / 5 U = D x 5 / 27648
	5 V	27648	0x6C00	Nominal range	
	2,5 V	13824	0x3600		
	0 V	0	0x0000		

Measurement range UR20-2AI-UI-16

Measurement range	Voltage (U)	Decimal (D)	Hexadecimal	Range	Conversion
0 ... 5 V Siemens S5 format	5,88 V	19268	0x4B44	Overloading	D = 16384 x U / 5 U = D x 5 / 16384
	5 V	16384	0x4000	Nominal range	
	2,5 V	8192	0x2000		
	0 V	0	0x0000		
±5 V Siemens S7 format	5,88 V	32511	0x7EFF	Overloading	D = 27648 x U / 5 U = D x 5 / 27648
	5 V	27648	0x6C00	Nominal range	
	2,5	13824	0x3600		
	0 V	0	0x0000		
	-2,5 V	-13824	0xCA00		
	-5 V	-27648	0x9400		
	-5,88 V	-32511	0x8100	Underloading	
±5 V Siemens S5 format	5,88 V	19268	0x4B44	Overloading	D = 16384 x U / 5 U = D x 5 / 16384
	5 V	16384	0x4000	Nominal range	
	2,5	8192	0x2000		
	0 V	0	0x0000		
	-2,5 V	-8192	0xE000		
	-5 V	-16384	0xC000		
	-5,88 V	-19268	0xB4BC	Underloading	

In the case of undervoltage (power supply), the input value 0x7FFF is displayed in S7 format.
In S5 format, the 3 least significant bits remain the status they had before the undervoltage, so the input value is in the range from 0x7FF8 to 0x7FFF.

The following applies for all S7 ranges:
input value > overload range = 0x7FFF
input value < underload range = 0x8000
Additional status bits are set for S5

Digital measured value representation in Siemens S5 format

Data bit	7	6	5	4	3	2	1	0
Byte 0 (High Byte)	2^{12}	2^{11}	2^{10}	2^{9}	2^{8}	2^{7}	2^{6}	2^{5}
Byte 1 (low byte)	2^{4}	2^{3}	2^{2}	2^{1}	2^{0}	A	F	0

A: 0 = not active / 1 = active
F: 0 = no line break / 1 = line break
0: 0 = 0 to 4095 units / 1 = ±4096 units (overflow)
Representation in two's complement, 2^{12} = VZ in representation as amount and signs

6.39 Analogue input module UR20-2AI-UI-16-DIAG

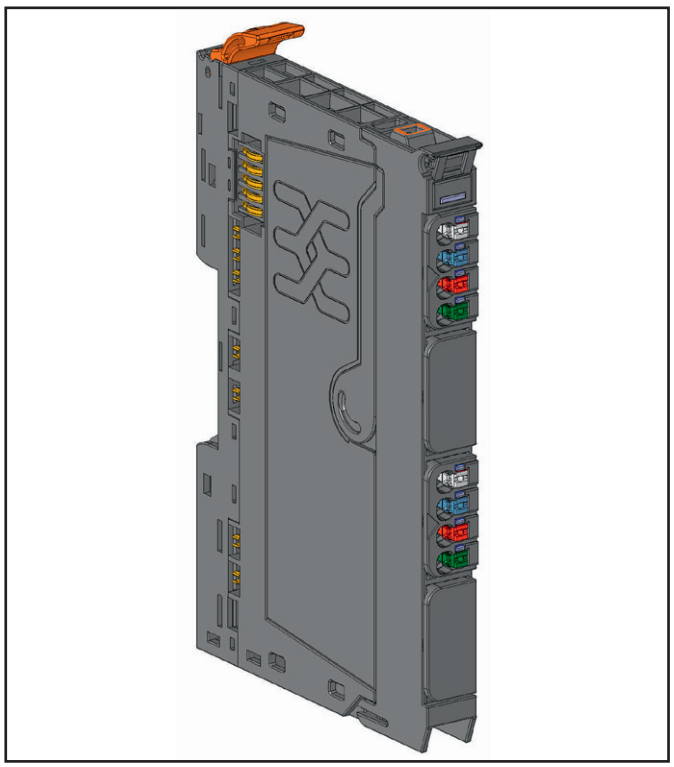

Analogue input module UR20-2AI-UI-16-DIAG (Item No. 2566090000)

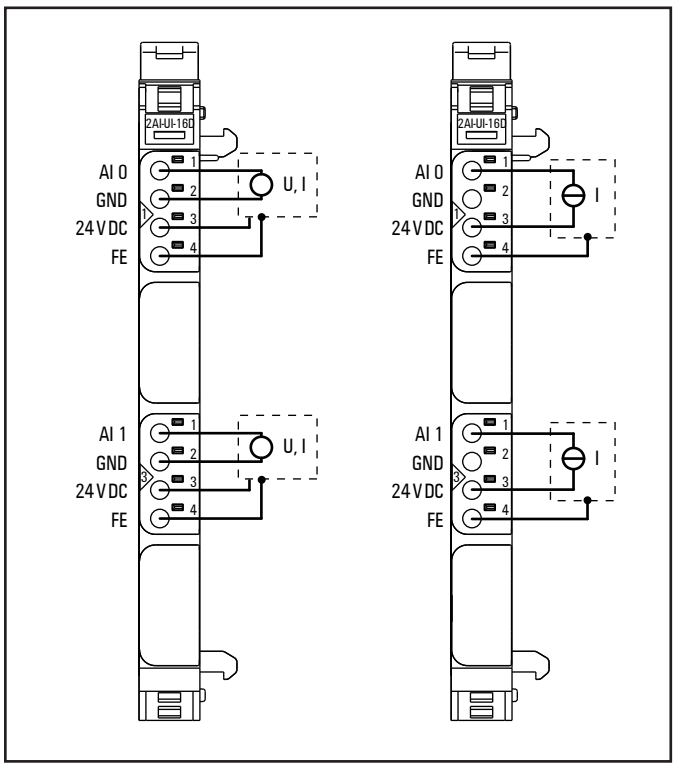

Connection diagram UR20-2AI-UI-16-DIAG (left 3/4-wire sensor with signal wiring and sensor supply via module electronics, right: 2-wire sensor loop powered by module electronics)

The UR20-2AI-UI-16-DIAG analogue input module can record up to 2 analogue sensors with ±10 V, ±5 V, 0 ... 10 V, 0 ... 5 V, 2 ... 10 V, 1 ... 5 V, 0 ... 20 mA or 4 ... 20 mA. The resolution is 16 bit per channel. Sensors can be connected to each connector in a 2-wire, 3-wire or 3-wire connection + FE. The measurement range is defined using parameterisation. Two status LED are assigned to each channel. The module electronics supply the connected sensors with power from the input current path (I_{IN}).

Each auxiliary voltage output is loadable with 500 mA and protected against overcurrent. The inputs are protected against voltage surges and overcurrent. Voltages that exceed ±30 V may cause the destruction of the module. As a protection against overcurrent, the module temporarily switches to voltage mode.

The module provides individual channel diagnosis with channel related error messages.



	Module status LED Green: Communication over the system bus Red: Error
1.1	Red: channel error
1.3	Red: +24 V short circuit or line break (with current < 1 mA)
3.1	Red: channel error
3.3	Red: +24 V short circuit or line break (with current < 1 mA)

LED indicators UR20-2AI-UI-16-DIAG , troubleshooting see Chapter 12

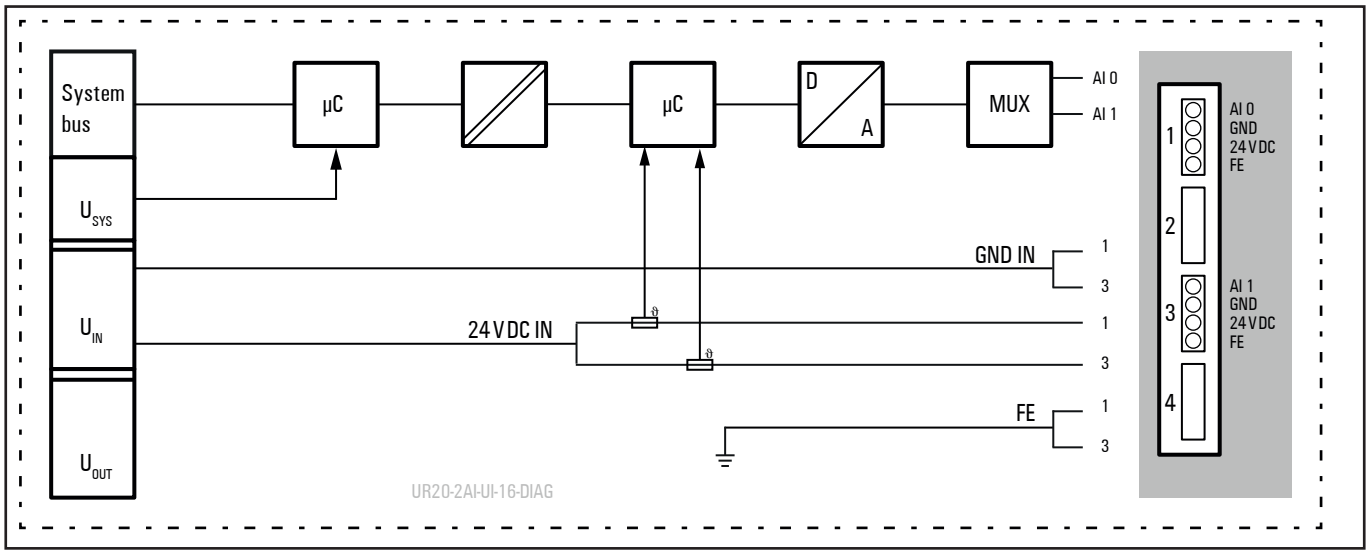

Block diagram UR20-2AI-UI-16-DIAG

Technical data UR20-2AI-UI-16-DIAG (Item No. 2566090000)

System data		
Data	Process, parameter and diagnostic data depend on the coupler used, see coupler description.	
Interface	u-remote system bus	
System bus transfer rate	48 Mbps	
Inputs		
Number	2	
Input values	1. Voltage (0 ... 5 V, ±5 V, 0 ... 10 V, ±10 V, 1 ... 5 V, 2 ... 10 V) 2. Current (0 ... 20 mA, 4 ... 20 mA)	
Resolution	16 bits	
Accuracy	0.1 % max. ±50 ppm/K max. max. +10 mV/A	at 25 °C Temperature coefficient additional inaccuracy in the voltage mode due to sensor power supply current
Sensor supply	max. 0,5 A per plug	
Sensor connection	2-wire, 3-wire, 3-wire + FE	
Conversion time	1 ms	
Internal resistance	U: typ. 100 kΩ; I: < 50 Ω	
Reverse polarity protection	yes	
Short-circuit-proof	yes	
Response time of the protective circuit	< 50 ms	
Module diagnosis	yes	
Individual channel diagnosis	yes	
Supply		
Supply voltage	24 V DC +20 %/-15 %	
Current consumption from system current path I_{SYS}	8 mA	
Current consumption from input current path I_{IN}	25 mA + sensor supply current	
General data		
Weight (operational status)	96 g	
For additional general data, see Section 3.4		

Overview of the editable parameters UR20-2AI-UI-16-DIAG

Channel	Description	Options[1)]	Default
	Frequency suppression	disabled (0) / 50 Hz (1) / 60 Hz (2) / Average over 16 values (3) / 2 Hz low pass (4)	disabled
0 ... 1	Channel diagnosis	disabled (0) / enabled (1)	disabled
0 ... 1	Diag short circiut 24 V	disabled (0) / enabled (1)	disabled
0 ... 1	Diag line break 24 V	disabled (0) / enabled (1)	disabled
0 ... 1	Data format	S5 Data format (0) / S7 Data format (1)	S7 Data format
0 ... 1	Measurement range	0 to 20 mA (0) / 4 to 20 mA (1) / 0 V to 10 V (2) / -10 to 10 V (3) / 0 to 5 V (4) / -5 to 5 V (5) / 1 to 5 V (6) / 2 to 10 V (7) /disabled (8)	disabled

1) Values in brackets for Modbus-TCP (firmware version 02.00.00 and higher), CANopen, EtherCAT and EtherNet/IP via module parameter class

Diagnostic data UR20-2AI-UI-16-DIAG

Name	Byte	Bit	Description	Default
Error indicator	0	0	Module error	
		1	Internal error	
		2	External error	
		3	Channel error	
		4	Error	
		5	Power supply fault	
		6	Reserved	0
		7	Parameter error	
Module type	1	0	Module type	0x05
		1		
		2		
		3		
		4	Channel information available	1
		5	Reserved	0
		6	Reserved	0
		7	Reserved	0
Error byte 2	2	0 ... 7	Reserved	0
Error byte 3	3	0 ... 2	Reserved	0
		3	Internal diagnostic FIFO full	
		4	Power supply fault	
		5 ... 7	Reserved	0
Channel type	4	0 ... 6	Channel type	0x74
		7	Reserved	0
Diagnostic bits per channel	5		Number of diagnostic bit per channel	8
Number of channels	6		Number of similar channels per module	2
Channel error	7	0	Error at channel 0	
		1	Error at channel 1	
		2 ... 7	Reserved	0
Channel error	8	8 ... 15	Reserved	0
Channel error	9	16 ... 23	Reserved	0
Channel error	10	24 ... 31	Reserved	0
Channel 0 error	11	0	Parameter Error	
		1	Overload	
		2	Line break sensor supply	
		3	External short-circuit	
		4	Line break signal	
		5	Reserved	0
		6	Lower limit exceeded	
		7	Upper limit exceeded	

Diagnostic data UR20-2AI-UI-16-DIAG

Name	Byte	Bit	Description	Default
Channel 1 error	12	0	Parameter Error	
		1	Overload	
		2	Line break sensor supply	
		3	External short-circuit	
		4	Line break signal	
		5	Reserved	0
		6	Lower limit exceeded	
		7	Upper limit exceeded	
Channel 2 error to Channel 31 error	13 ... 42	0 ... 7	Reserved	0
Time stamp	43-46		time stamp [µs] (32bit)	

Process data[1] inputs UR20-2AI-UI-16-DIAG

Byte	Format	Description	Remarks
IB0	Word	AI0	
IB1			
IB2	Word	AI1	
IB3			

1) Internal process data mapping with data format “Standard”. Depending on the fieldbus specification and the data format of the communicating fieldbus components the bytes and/or words can be reversed during data transfer.

A diagnosis is indicated when a diagnosis limit value has been exceeded.

Diagnosis limit values

Measurement range	Lower limit	Upper limit
0 ... 20 mA	-	21 mA
4 ... 20 mA	3.6 mA	21 mA
0 ... 10 V	-	10.5 V
2 ... 10 V	1.8 V	10.5 V
±10 V	-10.5 V	10.5 V
0 ... 5 V	-	5.25 V
1 ... 5 V	0.9 V	5.25 V
±5 V	-5.25 V	5.25 V

Measurement range UR20-2AI-UI-16-DIAG

Measurement range	Current (I) / Voltage (U)	Decimal (D)	Hexadecimal	Range	Conversion
0 – 20 mA Siemens S7 format	23.52 mA	32511	0x7EFF	Overloading	D = 27648 x I / 20 I = D x 20 / 27648
	20 mA	27648	0x6C00	Nominal range	
	10 mA	13824	0x3600		
	0 mA	0	0x0000		
0 – 20 mA Siemens S5 format	23.52 mA	19268	0x4B44	Overloading	D = 16384 x I / 20 I = D x 20 / 16384
	20 mA	16384	0x4000	Nominal range	
	10 mA	8192	0x2000		
	0 mA	0	0x0000		
4 – 20 mA Siemens S7 format	22.81 mA	32511	0x7EFF	Overloading	D = 27648 x (I – 4) / 16 I = D x 16 / 27648 + 4
	20 mA	27648	0x6C00	Nominal range	
	12 mA	13824	0x3600		
	4 mA	0	0x0000		
	1.19 mA	-4864	0xED00	Underloading	
4 – 20 mA Siemens S5 format	22.82 mA	19268	0x4B44	Overloading	D = 27648 x (I – 4) / 16 I = D x 16 / 16384 + 4
	20 mA	16384	0x4000	Nominal range	
	12 mA	8192	0x2000		
	4 mA	0	0x0000		
	0.8 mA	-3277	0xF333	Underloading	
0 – 10 V Siemens S7 format	11.76 V	32511	0x7EFFh	Overloading	D = 27648 x U/10 U = D x 10 / 27648
	10 V	27648	0x6C00	Nominal range	
	5 V	13824	0x3600		
	0 V	0	0x0000		
0 – 10 V Siemens S5 format	11.76 V	19268	0x4B44	Overloading	D = 16384 x U / 10 U = D x 10 / 16384
	10 V	16384	0x4000	Nominal range	
	5 V	8192	0x2000		
	0 V	0	0x0000		
±10 V Siemens S7 format	11.76 V	32511	0x7EFF	Overloading	D = 27648 x U / 10 U = D x 10 / 27648
	10 V	27648	0x6C00	Nominal range	
	5 V	13824	0x3600		
	0 V	0	0x0000		
	-5 V	-13824	0xCA00		
	-10 V	-27648	0x9400		
	-11.76 V	-32511	0x8100	Underloading	

Measurement range UR20-2AI-UI-16-DIAG

Measurement range	Voltage (U)	Decimal (D)	Hexadecimal	Range	Conversion
±10 V Siemens S5 format	11,76 V	19268	0x4B44	Overloading	D = 16384 x U / 10 U = D x 10 / 16384
	10 V	16384	0x4000	Nominal range	
	5 V	8192	0x2000		
	0 V	0	0x0000		
	-5 V	-8192	0xE000		
	-10 V	-16384	0xC000		
	-11,76 V	-19268	0xB4BC	Underloading	
2 ... 10 V Siemens S7 format	11,41 V	32511	0x7EFF	Overloading	D = 27648 x (U – 2) / 8 U = D x 8 / 27648 + 2
	10 V	27648	0x6C00	Nominal range	
	6 V	13824	0x3600		
	2 V	0	0x0000		
	0,59 V	-4864	0xED00	Underloading	
2 ... 10 V Siemens S5 format	11,41 V	19268	0x4B44	Overloading	D = 16384 x (U – 2) / 8 U = D x 8 / 16384 + 2
	10 V	16384	0x4000	Nominal range	
	6 V	8192	0x2000		
	2V	0	0x0000		
	0,40 V	-3277	0xF333	Underloading	
1 ... 5 V Siemens S7 format	5,7 V	32511	0x7EFF	Overloading	D = 27648 x (U – 1) / 4 U = D x 4 / 27648 + 1
	5 V	27648	0x6C00	Nominal range	
	3 V	13824	0x3600		
	1 V	0	0x0000		
	0,30 V	-4864	0xED00	Underloading	
1 ... 5 V Siemens S5 format	5,7 V	19268	0x4B44	Overloading	D = 16384 x (U – 1) / 4 U = D x 4 / 16384 + 1
	5 V	16384	0x4000	Nominal range	
	3 V	8192	0x2000		
	1 V	0	0x0000		
	0,20 V	-3277	0xF333	Underloading	
0 ... 5 V Siemens S7 format	5,88 V	32511	0x7EFF	Overloading	D = 27648 x U / 5 U = D x 5 / 27648
	5 V	27648	0x6C00	Nominal range	
	2,5 V	13824	0x3600		
	0 V	0	0x0000		

Measurement range UR20-2AI-UI-16-DIAG

Measurement range	Voltage (U)	Decimal (D)	Hexadecimal	Range	Conversion
0 ... 5 V Siemens S5 format	5,88 V	19268	0x4B44	Overloading	D = 16384 x U / 5 U = D x 5 / 16384
	5 V	16384	0x4000	Nominal range	
	2,5 V	8192	0x2000		
	0 V	0	0x0000		
±5 V Siemens S7 format	5,88 V	32511	0x7EFF	Overloading	D = 27648 x U / 5 U = D x 5 / 27648
	5 V	27648	0x6C00	Nominal range	
	2,5	13824	0x3600		
	0 V	0	0x0000		
	-2,5 V	-13824	0xCA00		
	-5 V	-27648	0x9400		
	-5,88 V	-32511	0x8100	Underloading	
±5 V Siemens S5 format	5,88 V	19268	0x4B44	Overloading	D = 16384 x U / 5 U = D x 5 / 16384
	5 V	16384	0x4000	Nominal range	
	2,5	8192	0x2000		
	0 V	0	0x0000		
	-2,5 V	-8192	0xE000		
	-5 V	-16384	0xC000		
	-5,88 V	-19268	0xB4BC	Underloading	

In the case of undervoltage (power supply), the input value 0x7FFF is displayed in S7 format.
In S5 format, the 3 least significant bits remain the status they had before the undervoltage, so the input value is in the range from 0x7FF8 to 0x7FFF.

The following applies for all S7 ranges:
input value > overload range = 0x7FFF
input value < underload range = 0x8000
Additional status bits are set for S5

Digital measured value representation in Siemens S5 format

Data bit	7	6	5	4	3	2	1	0
Byte 0 (High Byte)	2^{12}	2^{11}	2^{10}	2^{9}	2^{8}	2^{7}	2^{6}	2^{5}
Byte 1 (low byte)	2^{4}	2^{3}	2^{2}	2^{1}	2^{0}	A	F	0

A: 0 = not active / 1 = active
F: 0 = no line break / 1 = line break
0: 0 = 0 to 4095 units / 1 = ±4096 units (overflow)
Representation in two's complement, 2^{12} = VZ in representation as amount and signs

6.40 Analogue input module UR20-4AI-UI-16

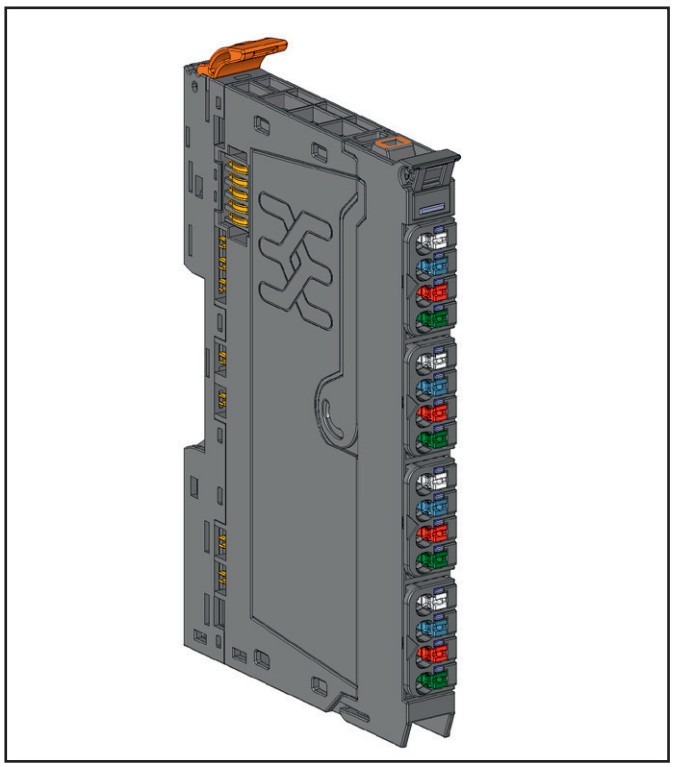

Analogue input module UR20-4AI-UI-16 (Item No. 1315620000)

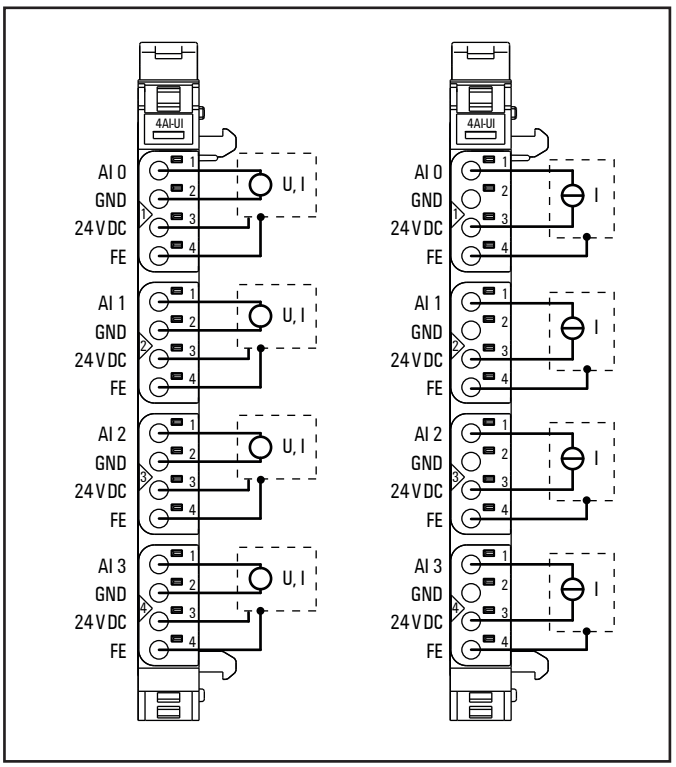

Connection diagram UR20-4AI-UI-16 (left 3/4-wire sensor with signal wiring and sensor supply via module electronics, right: 2-wire sensor loop powered by module electronics)

The UR20-4AI-UI-16 analogue input module can record up to 4 analogue sensors with ±10 V, ±5 V, 0 ... 10 V, 0 ... 5 V, 2 ... 10 V, 1 ... 5 V, 0 ... 20 mA or 4 ... 20 mA. The resolution is 16 bit per channel. Sensors can be connected to each connector in a 2-wire, 3-wire or 3-wire connection + FE. The measurement range is defined using parameterisation. A status LED is assigned to each channel. The module electronics supply the connected sensors with power from the input current path (I_{IN}).

The inputs are protected against voltage surges and overcurrent. Voltages that exceed ±30 V may cause the destruction of the module. As a protection against overcurrent, the module temporarily switches to voltage mode.

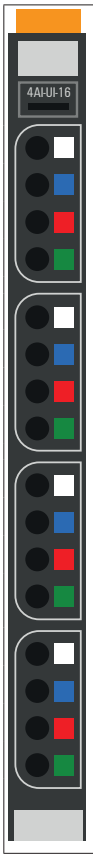

	Module status LED Green: Communication over the system bus Red: Error
1.1	Red: channel error
2.1	Red: channel error
3.1	Red: channel error
4.1	Red: channel error

LED indicators UR20-4AI-UI-16, troubleshooting see Chapter 12

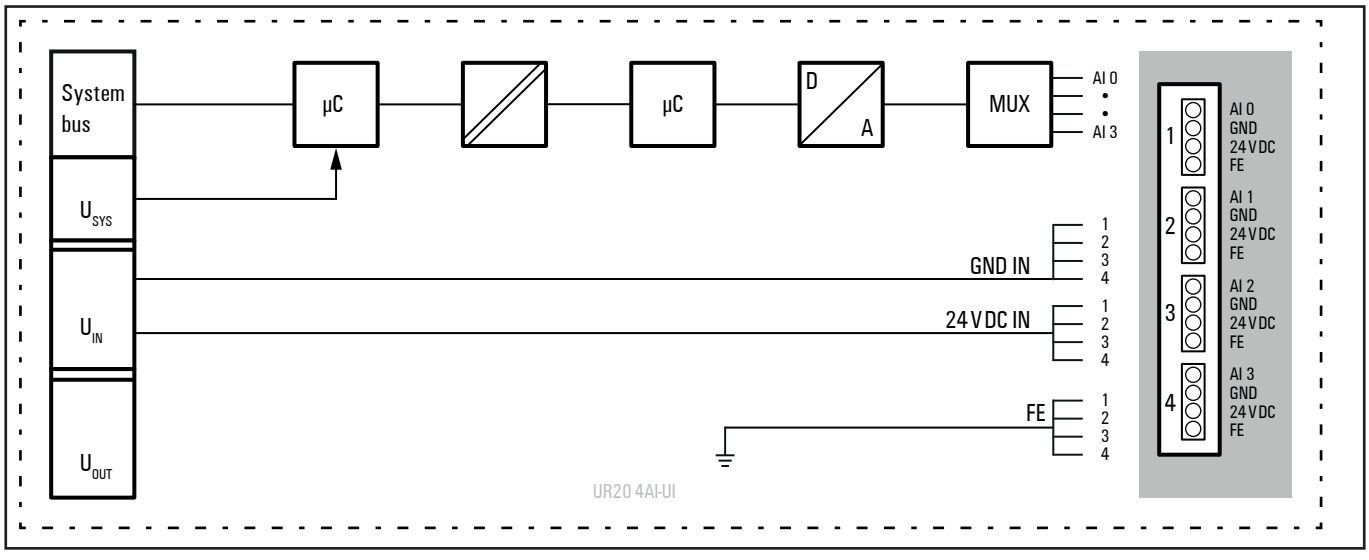

Block diagram UR20-4AI-UI-16

Technical data UR20-4AI-UI-16 (Item No. 1315620000)

System data		
Data	Process, parameter and diagnostic data depend on the coupler used, see coupler description.	
Interface	u-remote system bus	
System bus transfer rate	48 Mbps	
Inputs		
Number	4	
Input values	1. Voltage (0 ... 5 V, ±5 V, 0 ... 10 V, ±10 V, 1 ... 5 V, 2 ... 10 V) 2. Current (0 ... 20 mA, 4 ... 20 mA)	
Resolution	16 bits	
Accuracy	0.1 % max. ±50 ppm/K max. max. +10 mV/A	at 25 °C Temperature coefficient additional inaccuracy in the voltage mode due to sensor power supply current
Sensor supply	max. 2 A per plug, total max. 8 A	
Sensor connection	2-wire, 3-wire, 3-wire + FE	
Conversion time	1 ms	
Internal resistance	U: 100 kΩ; I: approx. 42 Ω	
Reverse polarity protection	yes	
Short-circuit-proof	yes	
Response time of the protective circuit	< 50 ms	
Module diagnosis	yes	
Individual channel diagnosis	no	
Supply		
Supply voltage	24 V DC +20 %/-15 %	
Current consumption from system current path I_{SYS}	8 mA	
Current consumption from input current path I_{IN}	25 mA + sensor supply current	
General data		
Weight (operational status)	96 g	
For additional general data, see Section 3.4		

Overview of the editable parameters UR20-4AI-UI-16

Channel	Description	Options[1)]	Default
	Frequency suppression	disabled (0) / 50 Hz (1) / 60 Hz (2) / Average over 16 values (3) / 2 Hz low pass (4)	disabled
0 ... 3	Data format	S5 Data format (0) / S7 Data format (1)	S7 Data format
0 ... 3	Measurement range	0 to 20 mA (0) / 4 to 20 mA (1) / 0 V to 10 V (2) / -10 to 10 V (3) / 0 to 5 V (4) / -5 to 5 V (5) / 1 to 5 V (6) / 2 to 10 V (7) /disabled (8)	disabled

1) Values in brackets for Modbus-TCP (firmware version 02.00.00 and higher), CANopen, EtherCAT and EtherNet/IP via module parameter class

Diagnostic data UR20-4AI-UI-16

Name	Bytes	Bit	Description	Default
Error indicator	0	0	Module error	
		1	Internal error	
		2	External error	
		3	Channel error	0
		4	Error	
		5	Reserved	0
		6	Reserved	0
		7	Parameter error	
Module types	1	0	Module Type	0x05
		1		
		2		
		3		
		4	Reserved	0
		5	Reserved	0
		6	Reserved	0
		7	Reserved	0
Error byte 2	2	0 ... 7	Reserved	0
Error byte 3	3	0 ... 2	Reserved	0
		3	Internal diagnostic FIFO full	
		4	Power supply fault	
		5	Reserved	0
		6	Reserved	0
		7	Reserved	0
Channel type	4	0 ... 6	Channel type	0x74
		7	Reserved	0
Diagnostic bits per channel	5		Number of diagnostic bit per channel	0
Number of channels	6		Number of similar channels per module	4
Channel error	7 ... 10	0 ... 31	Reserved	0
Channel 0 error to Channel 31 error	11 ... 42	0 ... 7	Reserved	0
Time stamp	43-46		time stamp [µs] (32bit)	

Process data[1] inputs UR20-4AI-UI-12

Byte	Format	Description	Remarks
IB0	Word	AI0	
IB1			
IB2	Word	AI1	
IB3			
IB4	Word	AI2	
IB5			
IB6	Word	AI3	
IB7			

1) Internal process data mapping with data format "Standard". Depending on the fieldbus specification and the data format of the communicating fieldbus components the bytes and/or words can be reversed during data transfer.

A diagnosis is indicated when a diagnosis limit value has been exceeded.

Diagnosis limit values

Measurement range	Lower limit	Upper limit
0 ... 20 mA	-	21 mA
4 ... 20 mA	3.6 mA	21 mA
0 ... 10 V	-	10.5 V
2 ... 10 V	1.8 V	10.5 V
±10 V	-10.5 V	10.5 V
0 ... 5 V	-	5.25 V
1 ... 5 V	0.9 V	5.25 V
±5 V	-5.25 V	5.25 V

Measurement range UR20-4AI-UI-16

Measurement range	Current (I) / Voltage (U)	Decimal (D)	Hexadecimal	Range	Conversion
0 – 20 mA Siemens S7 format	23.52 mA	32511	0x7EFF	Overloading	D = 27648 x I / 20 I = D x 20 / 27648
	20 mA	27648	0x6C00	Nominal range	
	10 mA	13824	0x3600		
	0 mA	0	0x0000		
0 – 20 mA Siemens S5 format	23.52 mA	19268	0x4B44	Overloading	D = 16384 x I / 20 I = D x 20 / 16384
	20 mA	16384	0x4000	Nominal range	
	10 mA	8192	0x2000		
	0 mA	0	0x0000		
4 – 20 mA Siemens S7 format	22.81 mA	32511	0x7EFF	Overloading	D = 27648 x (I – 4) / 16 I= D x 16 / 27648 + 4
	20 mA	27648	0x6C00	Nominal range	
	12 mA	13824	0x3600		
	4 mA	0	0x0000		
	1.19 mA	-4864	0xED00	Underloading	
4 – 20 mA Siemens S5 format	22.82 mA	19268	0x4B44	Overloading	D = 27648 x (I – 4) / 16 I = D x 16 / 16384 + 4
	20 mA	16384	0x4000	Nominal range	
	12 mA	8192	0x2000		
	4 mA	0	0x0000		
	0.8 mA	-3277	0xF333	Underloading	
0 – 10 V Siemens S7 format	11.76 V	32511	0x7EFFh	Overloading	D = 27648 x U/10 U = D x 10 / 27648
	10 V	27648	0x6C00	Nominal range	
	5 V	13824	0x3600		
	0 V	0	0x0000		
0 – 10 V Siemens S5 format	11.76 V	19268	0x4B44	Overloading	D = 16384 x U / 10 U = D x 10 / 16384
	10 V	16384	0x4000	Nominal range	
	5 V	8192	0x2000		
	0 V	0	0x0000		
±10 V Siemens S7 format	11.76 V	32511	0x7EFF	Overloading	D = 27648 x U / 10 U = D x 10 / 27648
	10 V	27648	0x6C00	Nominal range	
	5 V	13824	0x3600		
	0 V	0	0x0000		
	-5 V	-13824	0xCA00		
	-10 V	-27648	0x9400		
	-11.76 V	-32511	0x8100	Underloading	

Measurement range UR20-4AI-UI-16

Measurement range	Voltage (U)	Decimal (D)	Hexadecimal	Range	Conversion
±10 V Siemens S5 format	11,76 V	19268	0x4B44	Overloading	D = 16384 x U / 10 U = D x 10 / 16384
	10 V	16384	0x4000	Nominal range	
	5 V	8192	0x2000		
	0 V	0	0x0000		
	-5 V	-8192	0xE000		
	-10 V	-16384	0xC000		
	-11,76 V	-19268	0xB4BC	Underloading	
2 ... 10 V Siemens S7 format	11,41 V	32511	0x7EFF	Overloading	D = 27648 x (U – 2) / 8 U = D x 8 / 27648 + 2
	10 V	27648	0x6C00	Nominal range	
	6 V	13824	0x3600		
	2 V	0	0x0000		
	0,59 V	-4864	0xED00	Underloading	
2 ... 10 V Siemens S5 format	11,41 V	19268	0x4B44	Overloading	D = 16384 x (U – 2) / 8 U = D x 8 / 16384 + 2
	10 V	16384	0x4000	Nominal range	
	6 V	8192	0x2000		
	2V	0	0x0000		
	0,40 V	-3277	0xF333	Underloading	
1 ... 5 V Siemens S7 format	5,7 V	32511	0x7EFF	Overloading	D = 27648 x (U – 1) / 4 U = D x 4 / 27648 + 1
	5 V	27648	0x6C00	Nominal range	
	3 V	13824	0x3600		
	1 V	0	0x0000		
	0,30 V	-4864	0xED00	Underloading	
1 ... 5 V Siemens S5 format	5,7 V	19268	0x4B44	Overloading	D = 16384 x (U – 1) / 4 U = D x 4 / 16384 + 1
	5 V	16384	0x4000	Nominal range	
	3 V	8192	0x2000		
	1 V	0	0x0000		
	0,20 V	-3277	0xF333	Underloading	
0 ... 5 V Siemens S7 format	5,88 V	32511	0x7EFF	Overloading	D = 27648 x U / 5 U = D x 5 / 27648
	5 V	27648	0x6C00	Nominal range	
	2,5 V	13824	0x3600		
	0 V	0	0x0000		

Measurement range UR20-4AI-UI-16

Measurement range	Voltage (U)	Decimal (D)	Hexadecimal	Range	Conversion
0 ... 5 V Siemens S5 format	5,88 V	19268	0x4B44	Overloading	D = 16384 x U / 5 U = D x 5 / 16384
	5 V	16384	0x4000	Nominal range	
	2,5 V	8192	0x2000		
	0 V	0	0x0000		
±5 V Siemens S7 format	5,88 V	32511	0x7EFF	Overloading	D = 27648 x U / 5 U = D x 5 / 27648
	5 V	27648	0x6C00	Nominal range	
	2,5	13824	0x3600		
	0 V	0	0x0000		
	-2,5 V	-13824	0xCA00		
	-5 V	-27648	0x9400		
	-5,88 V	-32511	0x8100	Underloading	
±5 V Siemens S5 format	5,88 V	19268	0x4B44	Overloading	D = 16384 x U / 5 U = D x 5 / 16384
	5 V	16384	0x4000	Nominal range	
	2,5	8192	0x2000		
	0 V	0	0x0000		
	-2,5 V	-8192	0xE000		
	-5 V	-16384	0xC000		
	-5,88 V	-19268	0xB4BC	Underloading	

In the case of undervoltage (power supply), the input value 0x7FFF is displayed in S7 format.
In S5 format, the 3 least significant bits remain the status they had before the undervoltage, so the input value is in the range from 0x7FF8 to 0x7FFF.

The following applies for all S7 ranges:
input value > overload range = 0x7FFF
input value < underload range = 0x8000
Additional status bits are set for S5

Digital measured value representation in Siemens S5 format

Data bit	7	6	5	4	3	2	1	0
Byte 0 (High Byte)	2^{12}	2^{11}	2^{10}	2^{9}	2^{8}	2^{7}	2^{6}	2^{5}
Byte 1 (low byte)	2^{4}	2^{3}	2^{2}	2^{1}	2^{0}	A	F	0

A: 0 = not active / 1 = active
F: 0 = no line break / 1 = line break
0: 0 = 0 to 4095 units / 1 = ±4096 units (overflow)
Representation in two's complement, 2^{12} = VZ in representation as amount and signs

6.41 Analogue input module UR20-4AI-UI-16-DIAG

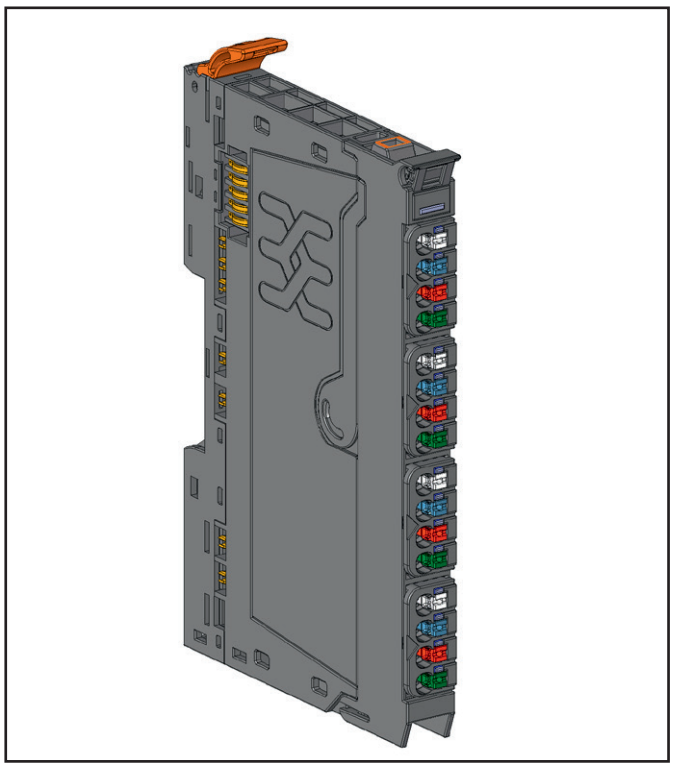

Analogue input module UR20-4AI-UI-16-DIAG (Item No. 1315690000)

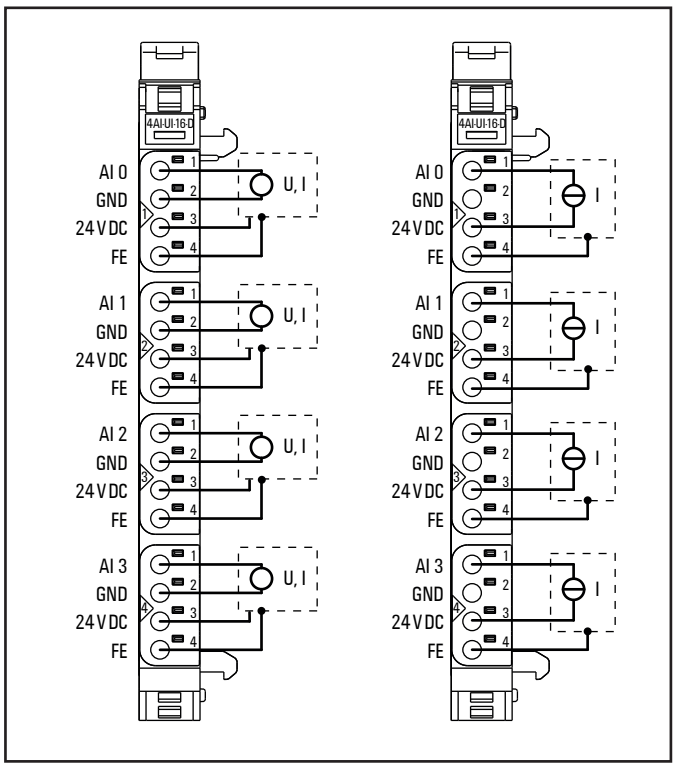

Connection diagram UR20-4AI-UI-16-DIAG (left 3/4-wire sensor with signal wiring and sensor supply via module electronics, right: 2-wire sensor loop powered by module electronics)

The UR20-4AI-UI-16-DIAG analogue input module can record up to 4 analogue sensors with ±10 V, ±5 V, 0 ... 10 V, 0 ... 5 V, 2 ... 10 V, 1 ... 5 V, 0 ... 20 mA or 4 ... 20 mA. The resolution is 16 bit per channel. Sensors can be connected to each connector in a 2-wire, 3-wire or 3-wire connection + FE. The measurement range is defined using parameterisation. Two status LED are assigned to each channel. The module electronics supply the connected sensors with power from the input current path (I_{IN}).

Each auxiliary voltage output is loadable with 500 mA and protected against overcurrent. The inputs are protected against voltage surges and overcurrent. Voltages that exceed ±30 V may cause the destruction of the module. As a protection against overcurrent, the module temporarily switches to voltage mode.

The module provides individual channel diagnosis with channel related error messages.

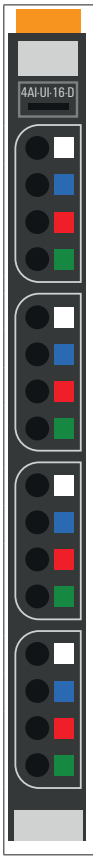

	Module status LED Green: Communication over the system bus Red: Error
1.1	Red: channel error
1.3	Red: +24 V short circuit or line break (with current < 1 mA)
2.1	Red: channel error
2.3	Red: +24 V short circuit or line break (with current < 1 mA)
3.1	Red: channel error
3.3	Red: +24 V short circuit or line break (with current < 1 mA)
4.1	Red: channel error
4.3	Red: +24 V short circuit or line break (with current < 1 mA)

LED indicators UR20-4AI-UI-16-DIAG , troubleshooting see Chapter 12

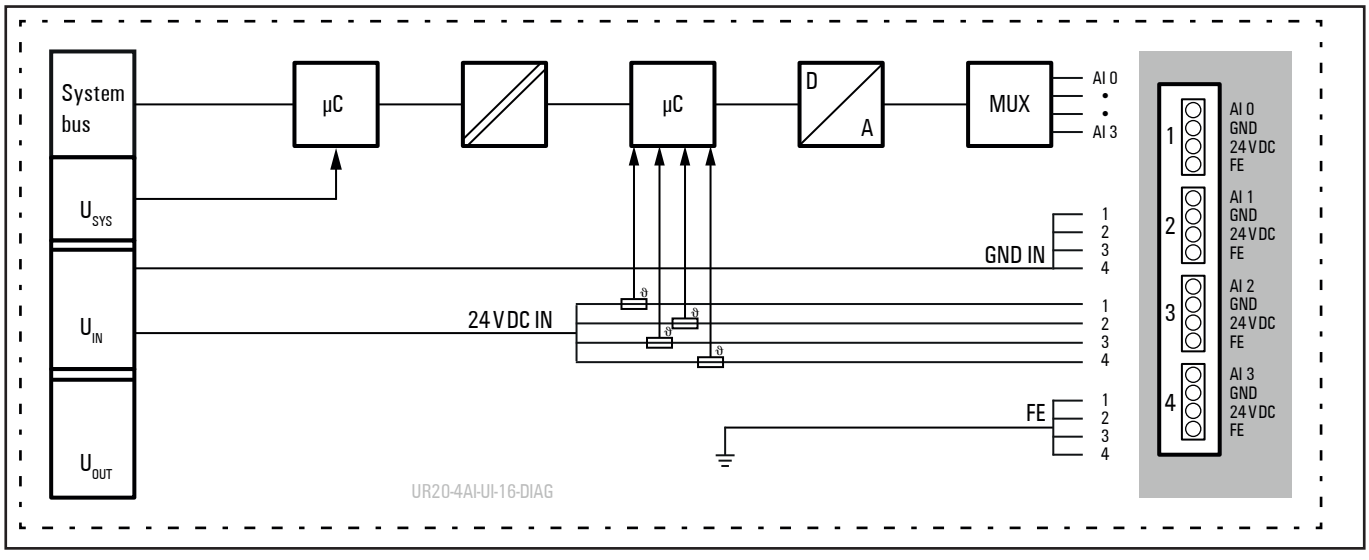

Block diagram UR20-4AI-UI-16-DIAG

Technical data UR20-4AI-UI-16-DIAG (Item No. 1315690000)

System data		
Data	Process, parameter and diagnostic data depend on the coupler used, see coupler description.	
Interface	u-remote system bus	
System bus transfer rate	48 Mbps	
Inputs		
Number	4	
Input values	1. Voltage (0 ... 5 V, ±5 V, 0 ... 10 V, ±10 V, 1 ... 5 V, 2 ... 10 V) 2. Current (0 ... 20 mA, 4 ... 20 mA)	
Resolution	16 bits	
Accuracy	0.1 % max. ±50 ppm/K max. max. +10 mV/A	at 25 °C Temperature coefficient additional inaccuracy in the voltage mode due to sensor power supply current
Sensor supply	max. 0,5 A per plug	
Sensor connection	2-wire, 3-wire, 3-wire + FE	
Conversion time	1 ms	
Internal resistance	U: 100 kΩ; I: approx. 42 Ω	
Reverse polarity protection	yes	
Short-circuit-proof	yes	
Response time of the protective circuit	< 50 ms	
Module diagnosis	yes	
Individual channel diagnosis	yes	
Supply		
Supply voltage	24 V DC +20 %/-15 %	
Current consumption from system current path I_{SYS}	8 mA	
Current consumption from input current path I_{IN}	25 mA + sensor supply current	
General data		
Weight (operational status)	96 g	
For additional general data, see Section 3.4		

Overview of the editable parameters UR20-4AI-UI-16-DIAG

Channel	Description	Options[1)]	Default
	Frequency suppression	disabled (0) / 50 Hz (1) / 60 Hz (2) / Average over 16 values (3) / 2 Hz low pass (4)	disabled
0 ... 3	Channel diagnosis	disabled (0) / enabled (1)	disabled
0 ... 3	Diag short circiut 24 V	disabled (0) / enabled (1)	disabled
0 ... 3	Diag line break 24 V	disabled (0) / enabled (1)	disabled
0 ... 3	Data format	S5 Data format (0) / S7 Data format (1)	S7 Data format
0 ... 3	Measurement range	0 to 20 mA (0) / 4 to 20 mA (1) / 0 V to 10 V (2) / -10 to 10 V (3) / 0 to 5 V (4) / -5 to 5 V (5) / 1 to 5 V (6) / 2 to 10 V (7) /disabled (8)	disabled

1) Values in brackets for Modbus-TCP (firmware version 02.00.00 and higher), CANopen, EtherCAT and EtherNet/IP via module parameter class

Diagnostic data UR20-4AI-UI-16-DIAG

Name	Byte	Bit	Description	Default
Error indicator	0	0	Module error	
		1	Internal error	
		2	External error	
		3	Channel error	
		4	Error	
		5	Power supply fault	
		6	Reserved	0
		7	Parameter error	
Module type	1	0	Module type	0x05
		1		
		2		
		3		
		4	Channel information available	1
		5	Reserved	0
		6	Reserved	0
		7	Reserved	0
Error byte 2	2	0 ... 7	Reserved	0
Error byte 3	3	0 ... 2	Reserved	0
		3	Internal diagnostic FIFO full	
		4	Power supply fault	
		5 ... 7	Reserved	0
Channel type	4	0 ... 6	Channel type	0x74
		7	Reserved	0
Diagnostic bits per channel	5		Number of diagnostic bit per channel	8
Number of channels	6		Number of similar channels per module	4
Channel error	7	0	Error at channel 0	
		1	Error at channel 1	
		2	Error at channel 2	
		3	Error at channel 3	
		4 ... 7	Reserved	0
Channel error	8	8 ... 15	Reserved	0
Channel error	9	16 ... 23	Reserved	0
Channel error	10	24 ... 31	Reserved	0

Diagnostic data UR20-4AI-UI-16-DIAG

Name	Byte	Bit	Description	Default
Channel 0 error	11	0	Parameter Error	
		1	Overload	
		2	Line break sensor supply	
		3	External short-circuit	
		4	Line break signal	
		5	Reserved	0
		6	Lower limit exceeded	
		7	Upper limit exceeded	
Channel 1 error	12	0	Parameter Error	
		1	Overload	
		2	Line break sensor supply	
		3	External short-circuit	
		4	Line break signal	
		5	Reserved	0
		6	Lower limit exceeded	
		7	Upper limit exceeded	
Channel 2 error	13	0	Parameter Error	
		1	Overload	
		2	Line break sensor supply	
		3	External short-circuit	
		4	Line break signal	
		5	Reserved	0
		6	Lower limit exceeded	
		7	Upper limit exceeded	
Channel 3 error	14	0	Parameter Error	
		1	Overload	
		2	Line break sensor supply	
		3	External short-circuit	
		4	Line break signal	
		5	Reserved	0
		6	Lower limit exceeded	
		7	Upper limit exceeded	
Channel 4 error to Channel 31 error	15 ... 42	0 ... 7	Reserved	0
Time stamp	43-46		time stamp [µs] (32bit)	

Process data[1] inputs UR20-4AI-UI-16-DIAG

Byte	Format	Description	Remarks
IB0	Word	AI0	
IB1			
IB2	Word	AI1	
IB3			
IB4	Word	AI2	
IB5			
IB6	Word	AI3	
IB7			

1) Internal process data mapping with data format “Standard”. Depending on the fieldbus specification and the data format of the communicating fieldbus components the bytes and/or words can be reversed during data transfer.

A diagnosis is indicated when a diagnosis limit value has been exceeded.

Diagnosis limit values

Measurement range	Lower limit	Upper limit
0 ... 20 mA	-	21 mA
4 ... 20 mA	3.6 mA	21 mA
0 ... 10 V	-	10.5 V
2 ... 10 V	1.8 V	10.5 V
±10 V	-10.5 V	10.5 V
0 ... 5 V	-	5.25 V
1 ... 5 V	0.9 V	5.25 V
±5 V	-5.25 V	5.25 V

Measurement range UR20-4AI-UI-16-DIAG

Measurement range	Current (I) / Voltage (U)	Decimal (D)	Hexadecimal	Range	Conversion
0 – 20 mA Siemens S7 format	23.52 mA	32511	0x7EFF	Overloading	D = 27648 x I / 20 I = D x 20 / 27648
	20 mA	27648	0x6C00	Nominal range	
	10 mA	13824	0x3600		
	0 mA	0	0x0000		
0 – 20 mA Siemens S5 format	23.52 mA	19268	0x4B44	Overloading	D = 16384 x I / 20 I = D x 20 / 16384
	20 mA	16384	0x4000	Nominal range	
	10 mA	8192	0x2000		
	0 mA	0	0x0000		
4 – 20 mA Siemens S7 format	22.81 mA	32511	0x7EFF	Overloading	D = 27648 x (I – 4) / 16 I = D x 16 / 27648 + 4
	20 mA	27648	0x6C00	Nominal range	
	12 mA	13824	0x3600		
	4 mA	0	0x0000		
	1.19 mA	-4864	0xED00	Underloading	
4 – 20 mA Siemens S5 format	22.82 mA	19268	0x4B44	Overloading	D = 27648 x (I – 4) / 16 I = D x 16 / 16384 + 4
	20 mA	16384	0x4000	Nominal range	
	12 mA	8192	0x2000		
	4 mA	0	0x0000		
	0.8 mA	-3277	0xF333	Underloading	
0 – 10 V Siemens S7 format	11.76 V	32511	0x7EFFh	Overloading	D = 27648 x U/10 U = D x 10 / 27648
	10 V	27648	0x6C00	Nominal range	
	5 V	13824	0x3600		
	0 V	0	0x0000		
0 – 10 V Siemens S5 format	11.76 V	19268	0x4B44	Overloading	D = 16384 x U / 10 U = D x 10 / 16384
	10 V	16384	0x4000	Nominal range	
	5 V	8192	0x2000		
	0 V	0	0x0000		
±10 V Siemens S7 format	11.76 V	32511	0x7EFF	Overloading	D = 27648 x U / 10 U = D x 10 / 27648
	10 V	27648	0x6C00	Nominal range	
	5 V	13824	0x3600		
	0 V	0	0x0000		
	-5 V	-13824	0xCA00		
	-10 V	-27648	0x9400		
	-11.76 V	-32511	0x8100	Underloading	

Measurement range UR20-4AI-UI-16-DIAG

Measurement range	Voltage (U)	Decimal (D)	Hexadecimal	Range	Conversion
±10 V Siemens S5 format	11,76 V	19268	0x4B44	Overloading	D = 16384 x U / 10 U = D x 10 / 16384
	10 V	16384	0x4000	Nominal range	
	5 V	8192	0x2000		
	0 V	0	0x0000		
	-5 V	-8192	0xE000		
	-10 V	-16384	0xC000		
	-11,76 V	-19268	0xB4BC	Underloading	
2 ... 10 V Siemens S7 format	11,41 V	32511	0x7EFF	Overloading	D = 27648 x (U – 2) / 8 U = D x 8 / 27648 + 2
	10 V	27648	0x6C00	Nominal range	
	6 V	13824	0x3600		
	2 V	0	0x0000		
	0,59 V	-4864	0xED00	Underloading	
2 ... 10 V Siemens S5 format	11,41 V	19268	0x4B44	Overloading	D = 16384 x (U – 2) / 8 U = D x 8 / 16384 + 2
	10 V	16384	0x4000	Nominal range	
	6 V	8192	0x2000		
	2V	0	0x0000		
	0,40 V	-3277	0xF333	Underloading	
1 ... 5 V Siemens S7 format	5,7 V	32511	0x7EFF	Overloading	D = 27648 x (U – 1) / 4 U = D x 4 / 27648 + 1
	5 V	27648	0x6C00	Nominal range	
	3 V	13824	0x3600		
	1 V	0	0x0000		
	0,30 V	-4864	0xED00	Underloading	
1 ... 5 V Siemens S5 format	5,7 V	19268	0x4B44	Overloading	D = 16384 x (U – 1) / 4 U = D x 4 / 16384 + 1
	5 V	16384	0x4000	Nominal range	
	3 V	8192	0x2000		
	1 V	0	0x0000		
	0,20 V	-3277	0xF333	Underloading	
0 ... 5 V Siemens S7 format	5,88 V	32511	0x7EFF	Overloading	D = 27648 x U / 5 U = D x 5 / 27648
	5 V	27648	0x6C00	Nominal range	
	2,5 V	13824	0x3600		
	0 V	0	0x0000		

Measurement range UR20-4AI-UI-16-DIAG

Measurement range	Voltage (U)	Decimal (D)	Hexadecimal	Range	Conversion
0 ... 5 V Siemens S5 format	5,88 V	19268	0x4B44	Overloading	D = 16384 x U / 5 U = D x 5 / 16384
	5 V	16384	0x4000	Nominal range	
	2,5 V	8192	0x2000		
	0 V	0	0x0000		
±5 V Siemens S7 format	5,88 V	32511	0x7EFF	Overloading	D = 27648 x U / 5 U = D x 5 / 27648
	5 V	27648	0x6C00	Nominal range	
	2,5	13824	0x3600		
	0 V	0	0x0000		
	-2,5 V	-13824	0xCA00		
	-5 V	-27648	0x9400		
	-5,88 V	-32511	0x8100	Underloading	
±5 V Siemens S5 format	5,88 V	19268	0x4B44	Overloading	D = 16384 x U / 5 U = D x 5 / 16384
	5 V	16384	0x4000	Nominal range	
	2,5	8192	0x2000		
	0 V	0	0x0000		
	-2,5 V	-8192	0xE000		
	-5 V	-16384	0xC000		
	-5,88 V	-19268	0xB4BC	Underloading	

In the case of undervoltage (power supply), the input value 0x7FFF is displayed in S7 format.
In S5 format, the 3 least significant bits remain the status they had before the undervoltage, so the input value is in the range from 0x7FF8 to 0x7FFF.

The following applies for all S7 ranges:
input value > overload range = 0x7FFF
input value < underload range = 0x8000
Additional status bits are set for S5

Digital measured value representation in Siemens S5 format

Data bit	7	6	5	4	3	2	1	0
Byte 0 (High Byte)	2^{12}	2^{11}	2^{10}	2^{9}	2^{8}	2^{7}	2^{6}	2^{5}
Byte 1 (low byte)	2^{4}	2^{3}	2^{2}	2^{1}	2^{0}	A	F	0

A: 0 = not active / 1 = active
F: 0 = no line break / 1 = line break
0: 0 = 0 to 4095 units / 1 = ±4096 units (overflow)
Representation in two's complement, 2^{12} = VZ in representation as amount and signs

6.42 Analogue input module UR20-4AI-UI-DIF-16-DIAG

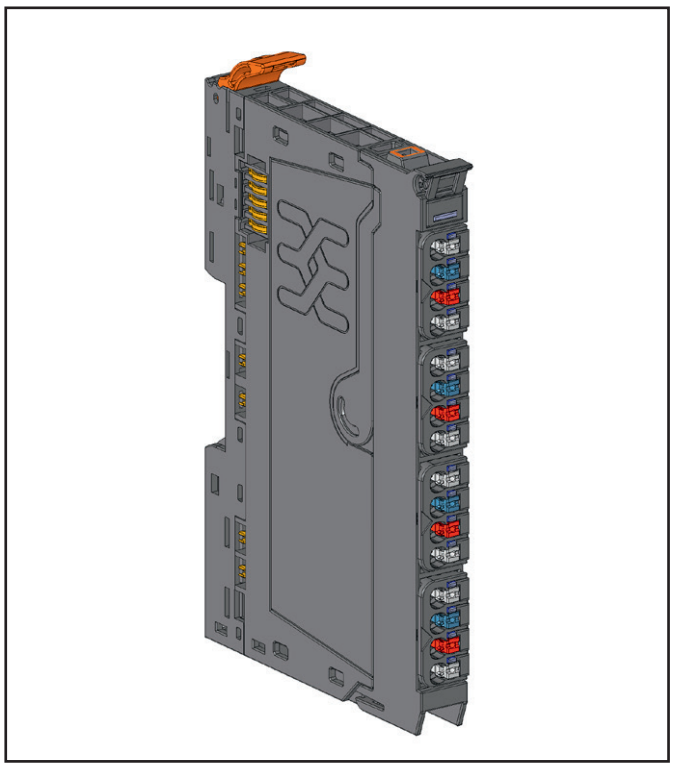

Analogue input module UR20-4AI-UI-DIF-16-DIAG (Item No.1993880000)

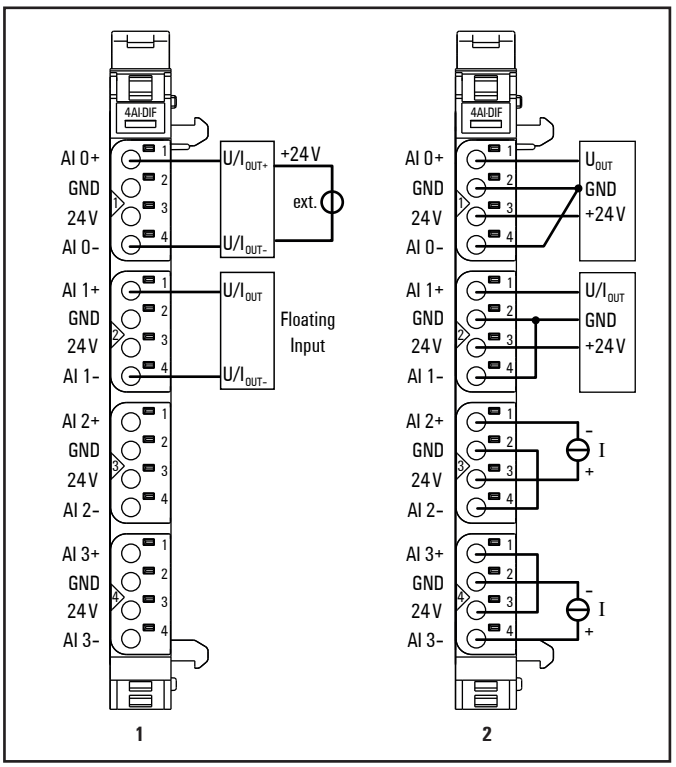

Connection diagram UR20-4AI-UI-DIF-16-DIAG (1 = Standard, 2 = alternative option)

The analogue input module UR20-4AI-UI-DIF-16-DIAG can record up to 4 analogue sensors with ±10 V, ±5 V, 0 ... 10 V, 0 ... 5 V, 2 ... 10 V, 1 ... 5 V, 0 ... 20 mA or 4 ... 20 mA. The resolution is 16 bit per channel. The input channels are differential inputs with a common mode voltage range of ±30 V.

Sensors can be connected to each connector in a 2-wire, 3-wire or 4-wire connection. The measurement range is defined using parameterisation. A status LED is assigned to each channel. The module electronics supply the connected sensors with power from the input current path (I_{IN}).

Each auxiliary voltage output is loadable with 500 mA and protected against overcurrent. The inputs are protected against voltage surges and overcurrent. Voltages that exceed ±36 V against GND may cause the destruction of the module. As a protection against overcurrent, the module will cycle on and off into high impedance mode.

The module provides individual channel diagnosis with channel related error messages.

In the event that you will realise the connection variant with an external sensor supply, please regard the common mode range:
$U_{Common\ mode}$ = -30 V ... +30 V!

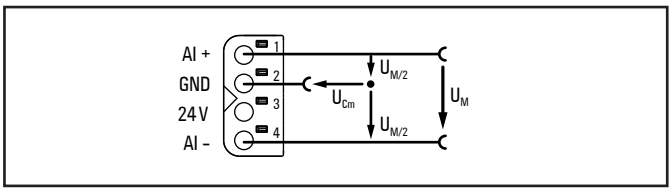

Definition of the Common mode (Cm)

The input bias current (typical 5 µA) of the input amplifier draws the inputs to -30 V. In normal operating conditions, this should not cause any problems.
If you expect the inputs to be temporarily not connected or the output impedance of the voltage source to be unbalanced, we recommend to use the UR20-4AI-UI-ISO-16-DIAG module alternatively.



	Module status LED Green: Communication over the system bus Red: Error
1.1	Red: Line break or range exceeded input 0
1.3	Red: Line break or short circuit in sensor supply
2.1	Red: Line break or range exceeded input 1
2.3	Red: Line break or short circuit in sensor supply
3.1	Red: Line break or range exceeded input 2
3.3	Red: Line break or short circuit in sensor supply
4.1	Red: Line break or range exceeded input 3
4.3	Red: Line break or short circuit in sensor supply

LED indicators UR20-4AI-UI-DIF-16-DIAG, troubleshooting see Chapter 12

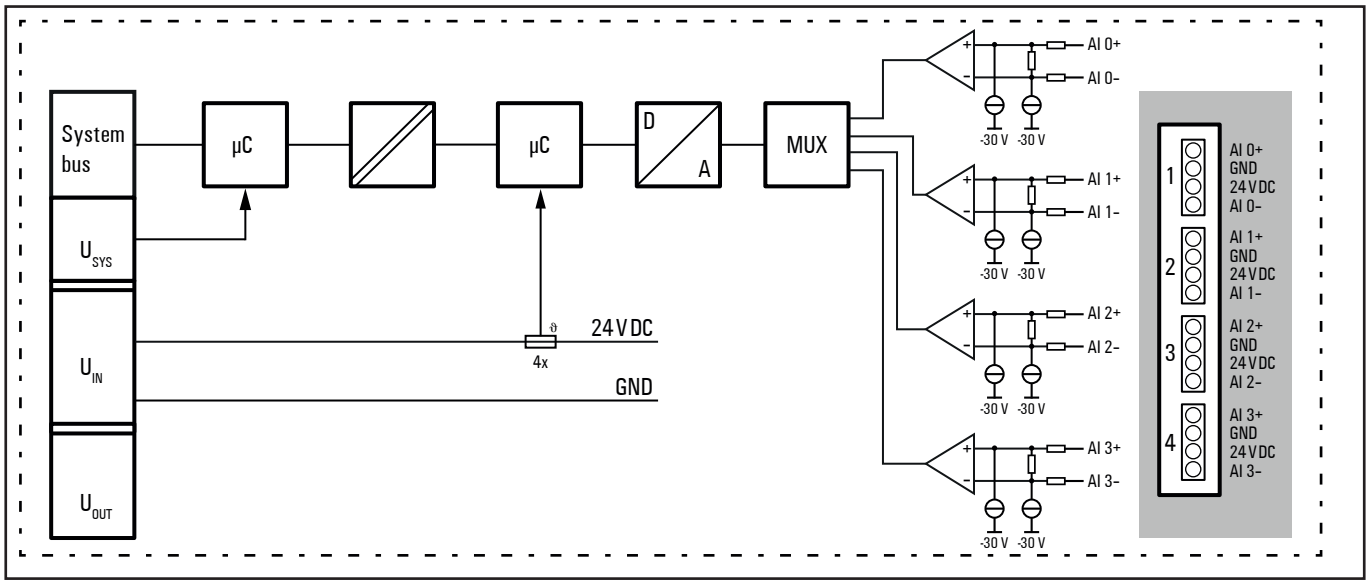

Block diagram UR20-4AI-UI-DIF-16-DIAG

Technical data UR20-4AI-UI-DIF-16-DIAG (Item No.1993880000)

System data		
Data	Process, parameter and diagnostic data depend on the coupler used, see coupler description.	
Interface	u-remote system bus	
System bus transfer rate	48 Mbps	
Inputs		
Number, type	4 differential inputs	
Common mode range	-30 V ... +30 V	
Input values	1. Voltage (0 ... 5 V, ±5 V, 0 ... 10 V, ±10 V, 1 ... 5 V, 2 ... 10 V) 2. Current (0 ... 20 mA, 4 ... 20 mA)	
Resolution	16 bits	
Accuracy	max. 0,1% FSR max. 75 ppm/K	at 25 °C temperature coefficient
Sensor supply	max. 500 mA per plug, no galvanic isolation	
Sensor connection	2-wire, 3-wire, 4-wire	
Conversion time	1 ms	
Internal resistance	U: > 89 kΩ; I: <17 Ω	
Reverse polarity protection	yes	
Short-circuit-proof	yes	
Module diagnosis	yes	
Individual channel diagnosis	yes	
Supply		
Supply voltage	24 V DC +20 %/-15 %	
Current consumption from system current path I_{SYS}	8 mA	
Current consumption from input current path I_{IN}	31 mA + load	
General data		
Weight (operational status)	91 g	
For additional general data, see Section 3.4		

Overview of the editable parameters UR20-4AI-UI-DIF-16-DIAG

Channel	Description	Options[1)]	Default
	Frequency suppression	disabled (0) / 50 Hz (1) / 60 Hz (2) / Average over 16 values (3) / 2 Hz low pass (4)	disabled
0 ... 3	Channel diagnosis	disabled (0) / enabled (1)	disabled
0 ... 3	Diag short circiut 24 V	disabled (0) / enabled (1)	disabled
0 ... 3	Diag line break 24 V	disabled (0) / enabled (1)	disabled
0 ... 3	Data format	S5 Data format (0) / S7 Data format (1) / User scale (2)	S7 Data format
0 ... 3	Measurement range	0 ... 20 mA (0) / 4 ... 20 mA (1) / 0 V ... 10 V (2) / -10 ... 10 V (3) / 0 ... 5 V (4) / -5 ... 5 V (5) / 1 ... 5 V (6) / 2 ... 10 V (7) / disabled (8)	disabled
0 ... 3	User scale offset	16 Bit signed, -32768 ... 32767	0
0 ... 3	User full scale value	32 Bit signed, -2147483648 ... 2147483647	0x7FFF

1) Values in brackets for Modbus-TCP (firmware version 02.00.00 and higher), CANopen, EtherCAT and EtherNet/IP via module parameter class

Diagnostic data UR20-4AI-UI-DIF-16-DIAG

Name	Byte	Bit	Description	Default
Error indicator	0	0	Module error	
		1	Internal error	
		2	External error	
		3	Channel error	
		4	Error	
		5	Power supply fault	
		6	Reserved	0
		7	Parameter error	
Module type	1	0	Module type	0x05
		1		
		2		
		3		
		4	Channel information available	1
		5	Reserved	0
		6	Reserved	0
		7	Reserved	0
Error byte 2	2	0 ... 7	Reserved	0
Error byte 3	3	0 ... 2	Reserved	0
		3	Internal diagnostic FIFO full	
		4	Power supply fault	
		5 ... 7	Reserved	0
Channel type	4	0 ... 6	Channel type	0x74
		7	Reserved	0
Diagnostic bits per channel	5		Number of diagnostic bit per channel	8
Number of channels	6		Number of similar channels per module	4
Channel error	7	0	Error at channel 0	
		1	Error at channel 1	
		2	Error at channel 2	
		3	Error at channel 3	
		4 ... 7	Reserved	0
Channel error	8	8 ... 15	Reserved	0
Channel error	9	16 ... 23	Reserved	0
Channel error	10	24 ... 31	Reserved	0
Channel 0 error	11	0	Parameter Error	
		1	Overload	
		2	Line break sensor supply	
		3	External short-circuit	
		4	Line break signal	
		5	Reserved	0
		6	Lower limit exceeded	
		7	Upper limit exceeded	
Channel 1 error	12	0	Parameter Error	
		1	Overload	
		2	Line break sensor supply	
		3	External short-circuit	
		4	Line break signal	
		5	Reserved	0
		6	Lower limit exceeded	
		7	Upper limit exceeded	

Diagnostic data UR20-4AI-UI-DIF-16-DIAG

Name	Byte	Bit	Description	Default
Channel 2 error	13	0	Parameter Error	
		1	Overload	
		2	Line break sensor supply	
		3	External short-circuit	
		4	Line break signal	
		5	Reserved	0
		6	Lower limit exceeded	
		7	Upper limit exceeded	
Channel 3 error	14	0	Parameter Error	
		1	Overload	
		2	Line break sensor supply	
		3	External short-circuit	
		4	Line break signal	
		5	Reserved	0
		6	Lower limit exceeded	
		7	Upper limit exceeded	
Channel 4 error to Channel 31 error	15 ... 42	0 ... 7	Reserved	0
Time stamp	43-46		time stamp [µs] (32bit)	

Process data[1] inputs UR20-4AI-UI-DIF-16-DIAG

Byte	Format	Description
IB0	Word	AI0
IB1		
IB2	Word	AI1
IB3		
IB4	Word	AI2
IB5		
IB6	Word	AI3
IB7		

1) Internal mapping of process data with data format „standard". Bytes and/or Words might be switched during data transfer depending on the fieldbus specification and the data format of the communicating fieldbus components.

A diagnosis is indicated when a diagnosis limit value has been exceeded.

Diagnosis limit values

Measurement range	Lower limit	Upper limit
0 ... 20 mA	-	21 mA
4 ... 20 mA	3.6 mA	21 mA
0 ... 10 V	-	10.5 V
2 ... 10 V	1.8 V	10.5 V
±10 V	-10.5 V	10.5 V
0 ... 5 V	-	5.25 V
1 ... 5 V	0.9 V	5.25 V
±5 V	-5.25 V	5.25 V

Measurement range UR20-4AI-UI-DIF-16-DIAG

Measurement range	Current (I) / Voltage (U)	Dezimal (D)	Hexadecimal	Range	Conversion
0 ... 20 mA Siemens S7 format	23,52 mA	32511	0x7EFF	Overloading	D = 27648 x I / 20 I = D x 20 =/ 27648
	20 mA	27648	0x6C00	Nominal range	
	10 mA	13824	0x3600		
	0 mA	0	0x0000		
0 ... 20 mA Siemens S5 format	23,52 mA	19268	0x4B44	Overloading	D = 16384 x I / 20 I = D x 20 / 16384
	20 mA	16384	0x4000	Nominal range	
	10 mA	8192	0x2000		
	0 mA	0	0x0000		
4 ... 20mA Siemens S7 format	22,81 mA	32511	0x7EFF	Overloading	D = 27648 x (I - 4) / 16 I= D x 16 / 27648 + 4
	20 mA	27648	0x6C00	Nominal range	
	12 mA	13824	0x3600		
	4 mA	0	0x0000		
	1,19 mA	-4864	0xED00	Underloading	
4 ... 20 mA Siemens S5 format	22,82 mA	19268	0x4B44	Overloading	D = 16384 x (I - 4) / 16 I = D x 16 / 16384 + 4
	20 mA	16384	0x4000	Nominal range	
	12 mA	8192	0x2000		
	4 mA	0	0x0000		
	0,8 mA	-3277	0xF333	Underloading	
0 ... 10 V Siemens S7 format	11,76 V	32511	0x7EFFh	Overloading	D = 27648 x U/10 I = D x 10 / 27648
	10 V	27648	0x6C00	Nominal range	
	5 V	13824	0x3600		
	0 V	0	0x0000		
0 ... 10 V Siemens S5 format	11,76 V	19268	0x4B44	Overloading	D = 16384 x U / 10 U = D x 10 / 16384
	10 V	16384	0x4000	Nominal range	
	5 V	8192	0x2000		
	0 V	0	0x0000		
±10 V Siemens S7 format	11,76 V	32511	0x7EFF	Overloading	D = 27648 x U / 10 U = D x 10 / 27648
	10 V	27648	0x6C00	Nominal range	
	5 V	13824	0x3600		
	0 V	0	0x0000		
	-5 V	-13824	0xCA00		
	-10 V	-27648	0x9400		
	-11,76 V	-32511	0x8100	Underloading	

Measurement range UR20-4AI-UI-DIF-16-DIAG

Measurement range	Current (I) / Voltage (U)	Dezimal (D)	Hexadecimal	Range	Conversion
±10 V Siemens S5 format	11,76 V	19268	0x4B44	Overloading	D = 16384 x U / 10 U = D x 10 / 16384
	10 V	16384	0x4000	Nominal range	
	5 V	8192	0x2000		
	0 V	0	0x0000		
	-5 V	-8192	0xE000		
	-10 V	-16384	0xC000		
	-11,76 V	-19268	0xB4BC	Underloading	
2 ... 10 V Siemens S7 format	11,41 V	32511	0x7EFF	Overloading	D = 27648 x (U – 2) / 8 U = D x 8 / 27648 + 2
	10 V	27648	0x6C00	Nominal range	
	6 V	13824	0x3600		
	2 V	0	0x0000		
	0,59 V	-4864	0xED00	Underloading	
2 ... 10 V Siemens S5 format	11,41 V	19268	0x4B44	Overloading	D = 16384 x (U – 2) / 8 U = D x 8 / 16384 + 2
	10 V	16384	0x4000	Nominal range	
	6 V	8192	0x2000		
	2V	0	0x0000		
	0,40 V	-3277	0xF333	Underloading	
1 ... 5 V Siemens S7 format	5,7 V	32511	0x7EFF	Overloading	D = 27648 x (U – 1) / 4 U = D x 4 / 27648 + 1
	5 V	27648	0x6C00	Nominal range	
	3 V	13824	0x3600		
	1 V	0	0x0000		
	0,30 V	-4864	0xED00	Underloading	
1 ... 5 V Siemens S5 format	5,7 V	19268	0x4B44	Overloading	D = 16384 x (U – 1) / 4 U = D x 4 / 16384 + 1
	5 V	16384	0x4000	Nominal range	
	3 V	8192	0x2000		
	1 V	0	0x0000		
	0,20 V	-3277	0xF333	Underloading	
0 ... 5 V Siemens S7 format	5,88 V	32511	0x7EFF	Overloading	D = 27648 x U / 5 U = D x 5 / 27648
	5 V	27648	0x6C00	Nominal range	
	2,5 V	13824	0x3600		
	0 V	0	0x0000		

Measurement range UR20-4AI-UI-DIF-16-DIAG

Measurement range	Voltage (U)	Decimal (D)	Hexadecimal	Range	Conversion
0 ... 5 V Siemens S5 format	5,88 V	19268	0x4B44	Overloading	D = 16384 x U / 5 U = D x 5 / 16384
	5 V	16384	0x4000	Nominal range	
	2,5 V	8192	0x2000		
	0 V	0	0x0000		
±5 V Siemens S7 format	5,88 V	32511	0x7EFF	Overloading	D = 27648 x U / 5 U = D x 5 / 27648
	5 V	27648	0x6C00	Nominal range	
	2,5	13824	0x3600		
	0 V	0	0x0000		
	-2,5 V	-13824	0xCA00		
	-5 V	-27648	0x9400		
	-5,88 V	-32511	0x8100	Underloading	
±5 V Siemens S5 format	5,88 V	19268	0x4B44	Overloading	D = 16384 x U / 5 U = D x 5 / 16384
	5 V	16384	0x4000	Nominal range	
	2,5	8192	0x2000		
	0 V	0	0x0000		
	-2,5 V	-8192	0xE000		
	-5 V	-16384	0xC000		
	-5,88 V	-19268	0xB4BC	Underloading	

In the case of undervoltage (power supply), the input value 0x7FFF is displayed in S7 format.
In S5 format, the 3 least significant bits remain the status they had before the undervoltage, so the input value is in the range from 0x7FF8 to 0x7FFF.

The following applies for all S7 ranges:
input value > overload range = 0x7FFF
input value < underload range = 0x8000
Additional status bits are set for S5

Digital measured value representation in Siemens S5 format

Data bit	7	6	5	4	3	2	1	0
Byte 0 (High Byte)	2^{12}	2^{11}	2^{10}	2^{9}	2^{8}	2^{7}	2^{6}	2^{5}
Byte 1 (low byte)	2^{4}	2^{3}	2^{2}	2^{1}	2^{0}	A	F	0

A: 0 = not active / 1 = active
F: 0 = no line break / 1 = line break
0: 0 = 0 to 4095 units / 1 = ±4096 units (overflow)
Representation in two's complement, 2^{12} = VZ in representation as amount and signs

6.43 Analogue input module UR20-4AI-UI-DIF-32-DIAG

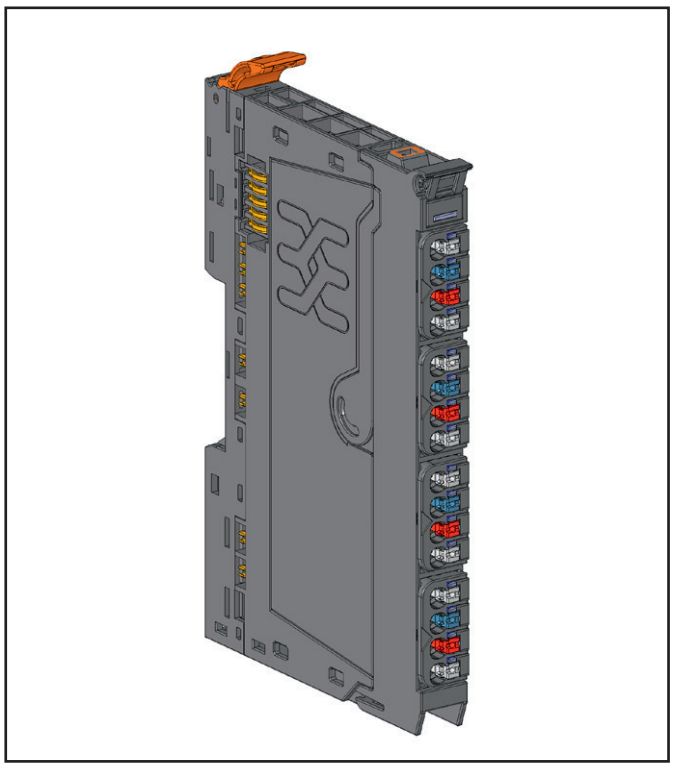

Analogue input module UR20-4AI-UI-DIF-32-DIAG (Item No.2544660000)

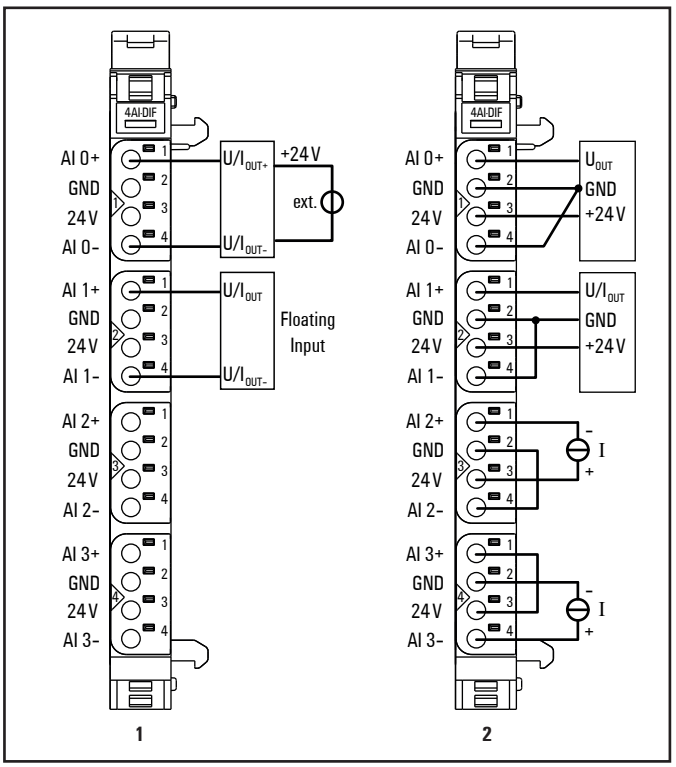

Connection diagram UR20-4AI-UI-DIF-32-DIAG (1 = Standard, 2 = alternative option)

The analogue input module UR20-4AI-UI-DIF-32-DIAG can record up to 4 analogue sensors with ±10 V, ±5 V, 0 ... 10 V, 0 ... 5 V, 2 ... 10 V, 1 ... 5 V, 0 ... 20 mA or 4 ... 20 mA. The resolution is 16 bit per channel. The values are displayed as floating point numbers according to IEEE-754. The input channels are differential inputs with a common mode voltage range of ±30 V.

Sensors can be connected to each connector in a 2-wire, 3-wire or 4-wire connection. The measurement range is defined using parameterisation. A status LED is assigned to each channel. The module electronics supply the connected sensors with power from the input current path (I_{IN}).

Each auxiliary voltage output is loadable with 500 mA and protected against overcurrent. The inputs are protected against voltage surges and overcurrent. Voltages that exceed ±36 V against GND may cause the destruction of the module. As a protection against overcurrent, the module will cycle on and off into high impedance mode.

The module provides individual channel diagnosis with channel related error messages.

In the event that you will realise the connection variant with an external sensor supply, please regard the common mode range:
$U_{Common\ mode}$ = -30 V ... +30 V!

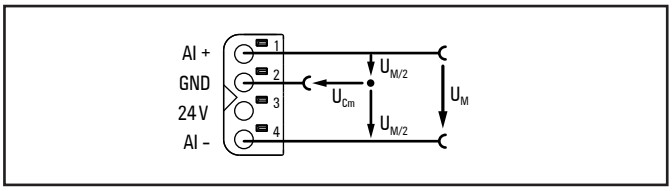

Definition of the Common mode (Cm)

The input bias current (typical 5 µA) of the input amplifier draws the inputs to -30 V. In normal operating conditions, this should not cause any problems.
If you expect the inputs to be temporarily not connected or the output impedance of the voltage source to be unbalanced, we recommend to use the UR20-4AI-UI-ISO-16-DIAG module alternatively.



	Module status LED Green: Communication over the system bus Red: Error
1.1	Red: Line break or range exceeded channel 0
1.3	Red: Line break or short circuit in sensor supply
2.1	Red: Line break or range exceeded channel 1
2.3	Red: Line break or short circuit in sensor supply
3.1	Red: Line break or range exceeded channel 2
3.3	Red: Line break or short circuit in sensor supply
4.1	Red: Line break or range exceeded channel 3
4.3	Red: Line break or short circuit in sensor supply

LED indicators UR20-4AI-UI-DIF-32-DIAG, troubleshooting see Chapter 12

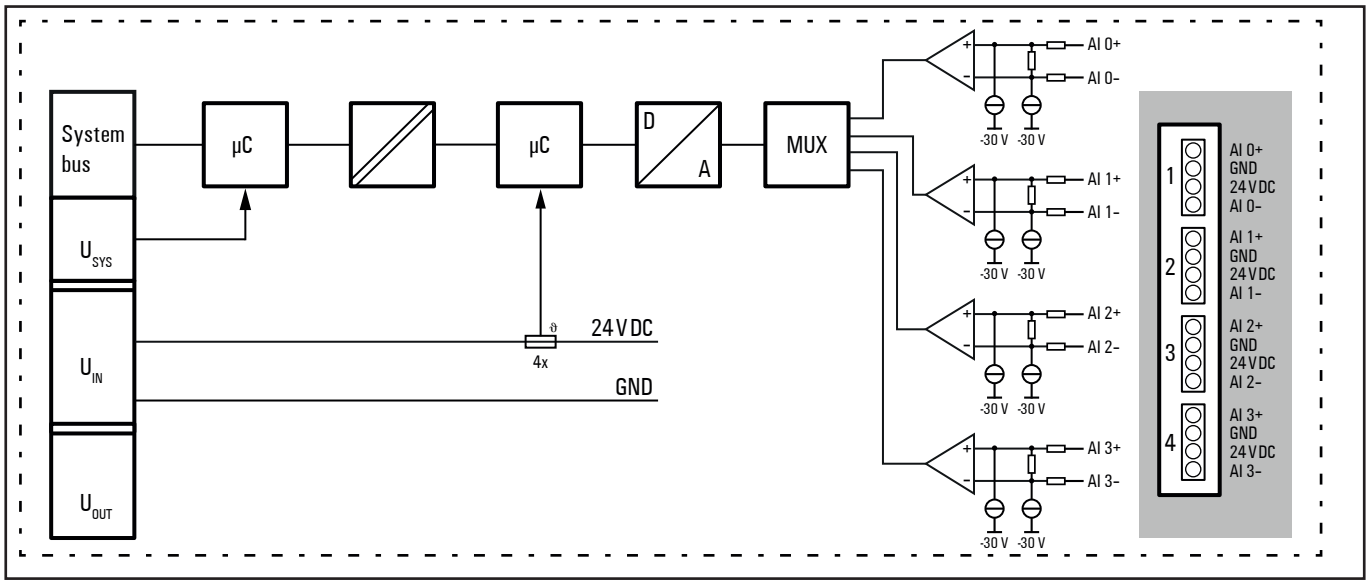

Block diagram UR20-4AI-UI-DIF-32-DIAG

Technical data UR20-4AI-UI-DIF-32-DIAG (Item No.2544660000)

System data		
Data	Process, parameter and diagnostic data depend on the coupler used, see coupler description.	
Interface	u-remote system bus	
System bus transfer rate	48 Mbps	
Inputs		
Number, type	4 differential inputs	
Common mode range	-30 V ... +30 V	
Input values	1. Voltage (0 ... 5 V, ±5 V, 0 ... 10 V, ±10 V, 1 ... 5 V, 2 ... 10 V) 2. Current (0 ... 20 mA, 4 ... 20 mA)	
Resolution	16 bits	
Accuracy	max. 0,1% FSR max. 75 ppm/K	at 25 °C temperature coefficient
Sensor supply	max. 500 mA per plug, no galvanic isolation	
Sensor connection	2-wire, 3-wire, 4-wire	
Conversion time	1 ms	
Internal resistance	U: > 89 kΩ; I: < 17 Ω	
Reverse polarity protection	yes	
Short-circuit-proof	yes	
Module diagnosis	yes	
Individual channel diagnosis	yes	
Supply		
Supply voltage	24 V DC +20 %/-15 %	
Current consumption from system current path I_{SYS}	8 mA	
Current consumption from input current path I_{IN}	31 mA + load	
General data		
Weight (operational status)	91 g	
For additional general data, see Section 3.4		

Overview of the editable parameters UR20-4AI-UI-DIF-32-DIAG

Channel	Description	Options[1)]	Default
	Frequency suppression	disabled (0) / 50 Hz (1) / 60 Hz (2) / Average over 16 values (3) / 2 Hz low pass (4)	disabled
0 ... 3	Channel diagnosis	disabled (0) / enabled (1)	disabled
0 ... 3	Diag short circuit 24 V	disabled (0) / enabled (1)	disabled
0 ... 3	Diag line break 24 V	disabled (0) / enabled (1)	disabled
0 ... 3	Data format[2)]	Default values (0) / User scale (1)	Default values
0 ... 3	Measurement range	0 ... 20 mA (0) / 4 ... 20 mA (1) / 0 V ... 10 V (2) / -10 ... 10 V (3) / 0 ... 5 V (4) / -5 ... 5 V (5) / 1 ... 5 V (6) / 2 ... 10 V (7) / disabled (8)	disabled
0 ... 3	User scale offset	-3.4028234663852924e^{38} ... 3.4028234663852924e^{38}	0.000
0 ... 3	User scale gain	-3.4028234663852924e^{38} ... 3.4028234663852924e^{38}	27648.000

1) Values in brackets for Modbus-TCP (firmware version 02.00.00 and higher), CANopen, EtherCAT and EtherNet/IP via module parameter class
2) Setting "Default values": Float view, e.g. 10 V as 10.000; User scale: Nominal value is the set value

Diagnostic data UR20-4AI-UI-DIF-32-DIAG

Name	Byte	Bit	Description	Default
Error indicator	0	0	Module error	
		1	Internal error	
		2	External error	
		3	Channel error	
		4	Error	
		5	Power supply fault	
		6	Reserved	0
		7	Parameter error	
Module type	1	0	Module type	0x05
		1		
		2		
		3		
		4	Channel information available	1
		5	Reserved	0
		6	Reserved	0
		7	Reserved	0
Error byte 2	2	0 ... 7	Reserved	0
Error byte 3	3	0 ... 2	Reserved	0
		3	Internal diagnostic FIFO full	
		4	Power supply fault	
		5 ... 7	Reserved	0
Channel type	4	0 ... 6	Channel type	0x74
		7	Reserved	0
Diagnostic bits per channel	5		Number of diagnostic bit per channel	8
Number of channels	6		Number of similar channels per module	4
Channel error	7	0	Error at channel 0	
		1	Error at channel 1	
		2	Error at channel 2	
		3	Error at channel 3	
		4 ... 7	Reserved	0
Channel error	8	8 ... 15	Reserved	0
Channel error	9	16 ... 23	Reserved	0
Channel error	10	24 ... 31	Reserved	0
Channel 0 error	11	0	Parameter Error	
		1	Overload	
		2	Line break sensor supply	
		3	External short-circuit	
		4	Line break signal	
		5	Reserved	0
		6	Lower limit exceeded	
		7	Upper limit exceeded	
Channel 1 error	12	0	Parameter Error	
		1	Overload	
		2	Line break sensor supply	
		3	External short-circuit	
		4	Line break signal	
		5	Reserved	0
		6	Lower limit exceeded	
		7	Upper limit exceeded	

Diagnostic data UR20-4AI-UI-DIF-32-DIAG

Name	Byte	Bit	Description	Default
Channel 2 error	13	0	Parameter Error	
		1	Overload	
		2	Line break sensor supply	
		3	External short-circuit	
		4	Line break signal	
		5	Reserved	0
		6	Lower limit exceeded	
		7	Upper limit exceeded	
Channel 3 error	14	0	Parameter Error	
		1	Overload	
		2	Line break sensor supply	
		3	External short-circuit	
		4	Line break signal	
		5	Reserved	0
		6	Lower limit exceeded	
		7	Upper limit exceeded	
Channel 4 error to Channel 31 error	15 ... 42	0 ... 7	Reserved	0
Time stamp	43-46		time stamp [µs] (32bit)	

Process data[1] inputs UR20-4AI-UI-DIF-32-DIAG

Byte	Format	Description
IB0 ... IB3	Float	AI0
IB4 ... IB7	Float	AI1
IB8 ... IB11	Float	AI2
IB12 ... IB15	Float	AI3

1) Internal mapping of process data with data format „standard“. Bytes and/or Words might be switched during data transfer depending on the fieldbus specification and the data format of the communicating fieldbus components.

A diagnosis is indicated when a diagnosis limit value has been exceeded.

Diagnosis limit values

Measurement range	Lower limit	Upper limit
0 ... 20 mA	-	21 mA
4 ... 20 mA	3.6 mA	21 mA
0 ... 10 V	-	10.5 V
2 ... 10 V	1.8 V	10.5 V
±10 V	-10.5 V	10.5 V
0 ... 5 V	-	5.25 V
1 ... 5 V	0.9 V	5.25 V
±5 V	-5.25 V	5.25 V

Measurement range UR20-4AI-UI-DIF-32-DIAG

Measurement range	Current (I)	Decimal (D)	Hexadecimal	Range	Conversion[1)]
0 ... 20 mA User scale	24 mA			Overloading	D = (EV - OS) x I / 20 mA + OS I = (D - OS) / (EV - OS) x 20 mA
	20 mA	EV	EV	Nominal range	
	0 mA	OS	OS		
	0 mA			Underloading	
4 ... 20 mA User scale	24 mA			Overloading	D = (EV - OS) x (I - 4mA) / 16 mA + OS I= (D - OS) / (EV - OS) x 16 mA + 4 mA
	20 mA	EV	EV	Nominal range	
	4 mA	OS	OS		
	0 mA			Underloading	

1) EV: User full scale value, OS: User scale offset

Measurement range UR20-4AI-UI-DIF-32-DIAG

Measurement range	Voltage (U)	Decimal (D)	Hexadecimal	Range	Conversion[1)]
0 ... 10 V User scale	12 V			Overloading	D = (EV - OS) x U / 10 V + OS U = (D - OS) / (EV - OS) x 10 V
	10 V	EV	EV	Nominal range	
	0 V	OS	OS		
	0 V			Underloading	
±10 V User scale	12 V			Overloading	D = (EV - OS) x U / 10 V + OS U = (D - OS) / (EV - OS) x 10 V
	10 V	EV	EV	Nominal range	
	0 V	OS	OS		
	-10 V	2 x OS - EV	2 x OS - EV		
	-12 V			Underloading	
2 ... 10 V User scale	12 V			Overloading	D = (EV - OS) x (U - 2 V) / 8 V + OS U = (D - OS) / (EV - OS) x 8 V + 2 V
	10 V	EV	EV	Nominal range	
	2 V	OS	OS		
	0 V			Underloading	
1 ... 5 V User scale	6 V			Overloading	D = (EV - OS) x (U - 1V) / 4 V + OS U = (D - OS) / (EV - OS) x 4 V + 1 V
	5 V	EV	EV	Nominal range	
	1 V	OS	OS		
	0 V			Underloading	
0 ... 5 V User scale	6 V			Overloading	D = (EV - OS) x U / 5 V + OS U = (D - OS) / (EV - OS) x 5 V
	5 V	EV	EV	Nominal range	
	0 V	OS	OS		
	0 V				
±5 V User scale	6 V			Overloading	D = (EV - OS) x U / 5 V + OS U = (D - OS) / (EV - OS) x 5 V
	5 V	EV	EV	Nominal range	
	0 V	OS	OS		
	-5 V	2 x OS - EV	2 x OS - EV		
	-6 V			Underloading	

1) EV: User full scale value, OS: User scale offset

6.44 Analogue input module UR20-4AI-UI-ISO-16-DIAG

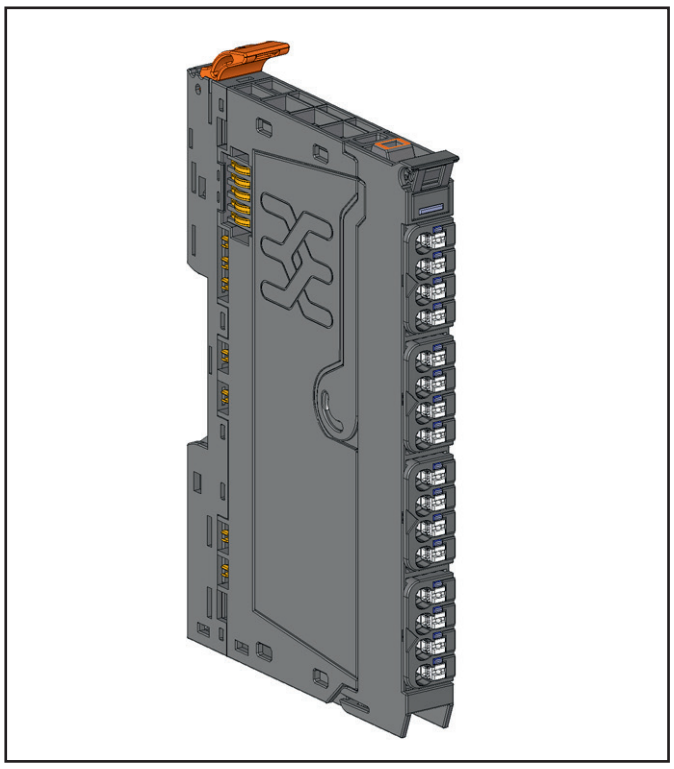

Analogue input module UR20-4AI-UI-ISO-16-DIAG (Item No. 2566960000)

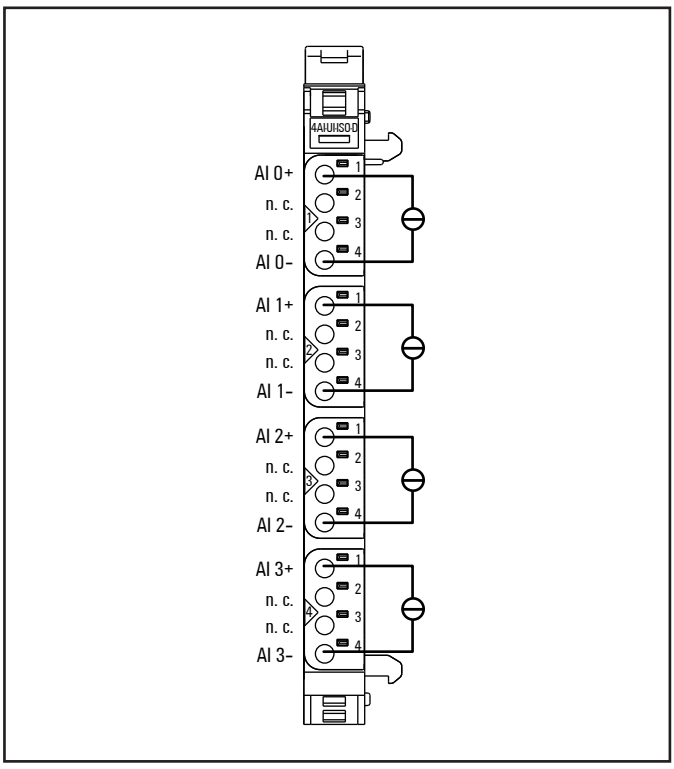

Connection diagram UR20-4AI-UI-ISO-16-DIAG

The UR20-4AI-UI-ISO-16-DIAG analogue input module can record up to 4 analogue sensors with ±10 V, ±5 V, 0 ... 10 V, 0 ... 5 V, 2 ... 10 V, 1 ... 5 V, 0 ... 20 mA or 4 ... 20 mA. The resolution is 16 bit per channel. Sensors can be connected to each connector in a 2-wire connection. The measurement range is defined using parameterisation. A status LED is assigned to each channel.

The inputs are protected against voltage surges and overcurrent. Voltages that exceed ±30 V may cause the destruction of the module. As a protection against overcurrent, the module temporarily switches to voltage mode.

The module provides individual channel diagnosis with channel related error messages. The module has no auxiliary voltage outputs. Connected sensors must be supplied externally.

In order to avoid perturbation effects please use shielded analogue lines only. Please connect the cable shield at both ends.



	Module status LED Green: Communication over the system bus Red: Error
1.4	Red: channel error
2.4	Red: channel error
3.4	Red: channel error
4.4	Red: channel error

LED indicators UR20-4AI-UI-ISO-16-DIAG , troubleshooting see Chapter 12

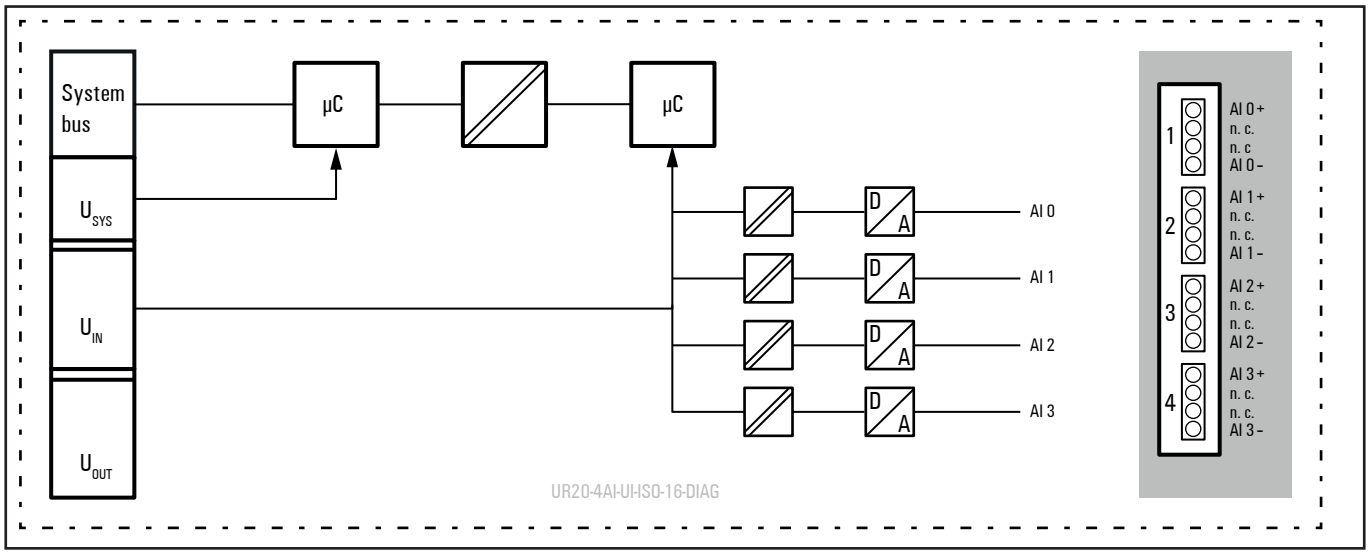

Block diagram UR20-4AI-UI-ISO-16-DIAG

Technical data UR20-4AI-UI-ISO-16-DIAG (Item No. 2566960000)

System data		
Data	Process, parameter and diagnostic data depend on the coupler used, see coupler description.	
Interface	u-remote system bus	
System bus transfer rate	48 Mbps	
Inputs		
Number	4	
Input values	1. Voltage (0 ... 5 V, ±5 V, 0 ... 10 V, ±10 V, 1 ... 5 V, 2 ... 10 V) 2. Current (0 ... 20 mA, 4 ... 20 mA)	
Resolution	16 bits	
Accuracy	0.1 % max. ±50 ppm/K max.	at 25 °C Temperature coefficient
Sensor supply	no	
Sensor connection	2-wire	
Conversion time	max. 1 ms, all 4 channels per cycle sampled asynchronously	
Internal resistance	U: min. 200 kΩ; I: max. 70 Ω	
Reverse polarity protection	yes	
Module diagnosis	yes	
Individual channel diagnosis	yes	
Supply		
Supply voltage	24 V DC +20 %/-15 % (acc. IEC 61131), +30 %/-25 % (acc. DNV GL)	
Current consumption from system current path I_{SYS}	8 mA	
Current consumption from input current path I_{IN}	31 mA	
General data		
Weight (operational status)	89 g	
For additional general data, see Section 3.4		

Overview of the editable parameters UR20-4AI-UI-ISO-16-DIAG

Channel	Description	Options[1)]	Default
	Frequency suppression	disabled (0) / 50 Hz (1) / 60 Hz (2) / Average over 16 values (3) / 2 Hz low pass (4)	disabled
0 ... 3	Channel diagnosis	disabled (0) / enabled (1)	disabled
0 ... 3	Data format	S5 Data format (0) / S7 Data format (1) / User scale (2)	S7 Data format
0 ... 3	Measurement range	0 to 20 mA (0) / 4 to 20 mA (1) / 0 V to 10 V (2) / -10 to 10 V (3) / 0 to 5 V (4) / -5 to 5 V (5) / 1 to 5 V (6) / 2 to 10 V (7) /disabled (8)	disabled
0 ... 3	User scale offset	16 Bit signed, -32768 ... 32767	0
0 ... 3	User full scale value	16 Bit signed, -32768 ... 32767	0x7FFF

1) Values in brackets for Modbus-TCP (firmware version 02.00.00 and higher), CANopen, EtherCAT and EtherNet/IP via module parameter class

Diagnostic data UR20-4AI-UI-ISO-16-DIAG

Name	Byte	Bit	Description	Default
Error indicator	0	0	Module error	
		1	Internal error	
		2	External error	
		3	Channel error	
		4	Error	
		5	Power supply fault	
		6	Reserved	0
		7	Parameter error	
Module type	1	0	Module type	0x05
		1		
		2		
		3		
		4	Channel information available	1
		5	Reserved	0
		6	Reserved	0
		7	Reserved	0
Error byte 2	2	0 ... 7	Reserved	0
Error byte 3	3	0 ... 2	Reserved	0
		3	Internal diagnostic FIFO full	
		4	Power supply fault	
		5 ... 7	Reserved	0
Channel type	4	0 ... 6	Channel type	0x74
		7	Reserved	0
Diagnostic bits per channel	5		Number of diagnostic bit per channel	8
Number of channels	6		Number of similar channels per module	4
Channel error	7	0	Error at channel 0	
		1	Error at channel 1	
		2	Error at channel 2	
		3	Error at channel 3	
		4 ... 7	Reserved	0
Channel error	8	8 ... 15	Reserved	0
Channel error	9	16 ... 23	Reserved	0
Channel error	10	24 ... 31	Reserved	0
Channel 0 error	11	0	Parameter Error	
		1	Reserved	
		2	Reserved	
		3	Reserved	
		4	Line break signal	
		5	Reserved	0
		6	Lower limit exceeded	
		7	Upper limit exceeded	
Channel 1 error	12	0	Parameter Error	
		1	Reserved	
		2	Reserved	
		3	Reserved	
		4	Line break signal	
		5	Reserved	0
		6	Lower limit exceeded	
		7	Upper limit exceeded	

Diagnostic data UR20-4AI-UI-ISO-16-DIAG

Name	Byte	Bit	Description	Default
Channel 2 error	13	0	Parameter Error	
		1	Reserved	
		2	Reserved	
		3	Reserved	
		4	Line break signal	
		5	Reserved	0
		6	Lower limit exceeded	
		7	Upper limit exceeded	
Channel 3 error	14	0	Parameter Error	
		1	Reserved	
		2	Reserved	
		3	Reserved	
		4	Line break signal	
		5	Reserved	0
		6	Lower limit exceeded	
		7	Upper limit exceeded	
Channel 4 error to Channel 31 error	15 ... 42	0 ... 7	Reserved	0
Time stamp	43-46		time stamp [µs] (32bit)	

Process data[1] inputs UR20-4AI-UI-ISO-16-DIAG

Byte	Format	Description	Remarks
IB0	Word	AI0	
IB1			
IB2	Word	AI1	
IB3			
IB4	Word	AI2	
IB5			
IB6	Word	AI3	
IB7			

1) Internal process data mapping with data format “Standard”. Depending on the fieldbus specification and the data format of the communicating fieldbus components the bytes and/or words can be reversed during data transfer.

A diagnosis is indicated when a diagnosis limit value has been exceeded.

Diagnosis limit values

Measurement range	Lower limit	Upper limit
0 ... 20 mA	-	21 mA
4 ... 20 mA	3.6 mA	21 mA
0 ... 10 V	-	10.5 V
2 ... 10 V	1.8 V	10.5 V
±10 V	-10.5 V	10.5 V
0 ... 5 V	-	5.25 V
1 ... 5 V	0.9 V	5.25 V
±5 V	-5.25 V	5.25 V

Measurement range UR20-4AI-UI-ISO-16-DIAG

Measurement range	Current (I) / Voltage (U)	Decimal (D)	Hexadecimal	Range	Conversion
0 – 20 mA Siemens S7 format	23.52 mA	32511	0x7EFF	Overloading	D = 27648 x I / 20 I = D x 20 / 27648
	20 mA	27648	0x6C00	Nominal range	
	10 mA	13824	0x3600		
	0 mA	0	0x0000		
0 – 20 mA Siemens S5 format	23.52 mA	19268	0x4B44	Overloading	D = 16384 x I / 20 I = D x 20 / 16384
	20 mA	16384	0x4000	Nominal range	
	10 mA	8192	0x2000		
	0 mA	0	0x0000		
4 – 20 mA Siemens S7 format	22.81 mA	32511	0x7EFF	Overloading	D = 27648 x (I – 4) / 16 I = D x 16 / 27648 + 4
	20 mA	27648	0x6C00	Nominal range	
	12 mA	13824	0x3600		
	4 mA	0	0x0000		
	1.19 mA	-4864	0xED00	Underloading	
4 – 20 mA Siemens S5 format	22.82 mA	19268	0x4B44	Overloading	D = 27648 x (I – 4) / 16 I = D x 16 / 16384 + 4
	20 mA	16384	0x4000	Nominal range	
	12 mA	8192	0x2000		
	4 mA	0	0x0000		
	0.8 mA	-3277	0xF333	Underloading	
0 – 10 V Siemens S7 format	11.76 V	32511	0x7EFFh	Overloading	D = 27648 x U/10 U = D x 10 / 27648
	10 V	27648	0x6C00	Nominal range	
	5 V	13824	0x3600		
	0 V	0	0x0000		
0 – 10 V Siemens S5 format	11.76 V	19268	0x4B44	Overloading	D = 16384 x U / 10 U = D x 10 / 16384
	10 V	16384	0x4000	Nominal range	
	5 V	8192	0x2000		
	0 V	0	0x0000		
±10 V Siemens S7 format	11.76 V	32511	0x7EFF	Overloading	D = 27648 x U / 10 U = D x 10 / 27648
	10 V	27648	0x6C00	Nominal range	
	5 V	13824	0x3600		
	0 V	0	0x0000		
	-5 V	-13824	0xCA00		
	-10 V	-27648	0x9400		
	-11.76 V	-32511	0x8100	Underloading	
±10 V Siemens S5 format	11,76 V	19268	0x4B44	Overloading	D = 16384 x U / 10 U = D x 10 / 16384
	10 V	16384	0x4000	Nominal range	
	5 V	8192	0x2000		
	0 V	0	0x0000		
	-5 V	-8192	0xE000		
	-10 V	-16384	0xC000		
	-11,76 V	-19268	0xB4BC	Underloading	

Measurement range UR20-4AI-UI-ISO-16-DIAG

Measurement range	Current (I) / Voltage (U)	Decimal (D)	Hexadecimal	Range	Conversion
2 ... 10 V Siemens S7 format	11,41 V	32511	0x7EFF	Overloading	D = 27648 x (U – 2) / 8 U = D x 8 / 27648 + 2
	10 V	27648	0x6C00	Nominal range	
	6 V	13824	0x3600		
	2 V	0	0x0000		
	0,59 V	-4864	0xED00	Underloading	
2 ... 10 V Siemens S5 format	11,41 V	19268	0x4B44	Overloading	D = 16384 x (U – 2) / 8 U = D x 8 / 16384 + 2
	10 V	16384	0x4000	Nominal range	
	6 V	8192	0x2000		
	2V	0	0x0000		
	0,40 V	-3277	0xF333	Underloading	
1 ... 5 V Siemens S7 format	5,7 V	32511	0x7EFF	Overloading	D = 27648 x (U – 1) / 4 U = D x 4 / 27648 + 1
	5 V	27648	0x6C00	Nominal range	
	3 V	13824	0x3600		
	1 V	0	0x0000		
	0,30 V	-4864	0xED00	Underloading	
1 ... 5 V Siemens S5 format	5,7 V	19268	0x4B44	Overloading	D = 16384 x (U – 1) / 4 U = D x 4 / 16384 + 1
	5 V	16384	0x4000	Nominal range	
	3 V	8192	0x2000		
	1 V	0	0x0000		
	0,20 V	-3277	0xF333	Underloading	
0 ... 5 V Siemens S7 format	5,88 V	32511	0x7EFF	Overloading	D = 27648 x U / 5 U = D x 5 / 27648
	5 V	27648	0x6C00	Nominal range	
	2,5 V	13824	0x3600		
	0 V	0	0x0000		
0 ... 5 V Siemens S5 format	5,88 V	19268	0x4B44	Overloading	D = 16384 x U / 5 U = D x 5 / 16384
	5 V	16384	0x4000	Nominal range	
	2,5 V	8192	0x2000		
	0 V	0	0x0000		
±5 V Siemens S7 format	5,88 V	32511	0x7EFF	Overloading	D = 27648 x U / 5 U = D x 5 / 27648
	5 V	27648	0x6C00	Nominal range	
	2,5	13824	0x3600		
	0 V	0	0x0000		
	-2,5 V	-13824	0xCA00		
	-5 V	-27648	0x9400		
	-5,88 V	-32511	0x8100	Underloading	

Measurement range UR20-4AI-UI-ISO-16-DIAG

Measurement range	Current (I) / Voltage (U)	Decimal (D)	Hexadecimal	Range	Conversion
±5 V Siemens S5 format	5,88 V	19268	0x4B44	Overloading	D = 16384 x U / 5 U = D x 5 / 16384
	5 V	16384	0x4000	Nominal range	
	2,5	8192	0x2000		
	0 V	0	0x0000		
	-2,5 V	-8192	0xE000		
	-5 V	-16384	0xC000		
	-5,88 V	-19268	0xB4BC	Underloading	

In the case of undervoltage (power supply), the input value 0x7FFF is displayed in S7 format.
In S5 format, the 3 least significant bits remain the status they had before the undervoltage, so the input value is in the range from 0x7FF8 to 0x7FFF.

The following applies for all S7 ranges:
input value > overload range = 0x7FFF
input value < underload range = 0x8000
Additional status bits are set for S5

Digital measured value representation in Siemens S5 format

Data bit	7	6	5	4	3	2	1	0
Byte 0 (High Byte)	2^{12}	2^{11}	2^{10}	2^{9}	2^{8}	2^{7}	2^{6}	2^{5}
Byte 1 (low byte)	2^{4}	2^{3}	2^{2}	2^{1}	2^{0}	A	F	0

A: 0 = not active / 1 = active
F: 0 = no line break / 1 = line break
0: 0 = 0 to 4095 units / 1 = ±4096 units (overflow)
Representation in two's complement, 2^{12} = VZ in representation as amount and signs

Measurement range UR20-4AI-UI-ISO-16-DIAG

Measurement range	Current (I)	Decimal (D)	Hexadecimal	Range	Conversion[1)]
0 ... 20 mA User scale	23,52 mA			Overloading	D = (EV - OS) x I / 20 mA + OS I = (D - OS) / (EV - OS) x 20 mA
	20 mA	EV	EV	Nominal range	
	0 mA	OS	OS		
	0 mA			Underloading	
4 ... 20 mA User scale	22,81 mA			Overloading	D = (EV - OS) x (I - 4mA) / 16 mA + OS I= (D - OS) / (EV - OS) x 16 mA + 4 mA
	20 mA	EV	EV	Nominal range	
	4 mA	OS	OS		
	0 mA			Underloading	

1) EV: User full scale value, OS: User scale offset

Measurement range UR20-4AI-UI-ISO-16-DIAG

Measurement range	Voltage (U)	Decimal (D)	Hexadecimal	Range	Conversion[1)]
0 ... 10 V User scale	11,76 V			Overloading	D = (EV - OS) x U / 10 V + OS U = (D - OS) / (EV - OS) x 10 V
	10 V	EV	EV	Nominal range	
	0 V	OS	OS		
	0 V			Underloading	
±10 V User scale	11,76 V			Overloading	D = (EV - OS) x U / 10 V + OS U = (D - OS) / (EV - OS) x 10 V
	10 V	EV	EV	Nominal range	
	0 V	OS	OS		
	-10 V	2 x OS - EV	2 x OS - EV		
	-11,76 V			Underloading	
2 ... 10 V User scale	11,41 V			Overloading	D = (EV - OS) x (U - 2 V) / 8 V + OS U = (D - OS) / (EV - OS) x 8 V + 2 V
	10 V	EV	EV	Nominal range	
	2 V	OS	OS		
	0 V			Underloading	
1 ... 5 V User scale	5,7 V			Overloading	D = (EV - OS) x (U - 1V) / 4 V + OS U= (D - OS) / (EV - OS) x 4 V + 1 V
	5 V	EV	EV	Nominal range	
	1 V	OS	OS		
	0 V			Underloading	
0 ... 5 V User scale	5,88 V			Overloading	D = (EV - OS) x U / 5 V + OS U = (D - OS) / (EV - OS) x 5 V
	5 V	EV	EV	Nominal range	
	0 V	OS	OS		
	0 V				
±5 V User scale	5,88 V			Overloading	D = (EV - OS) x U / 5 V + OS U = (D - OS) / (EV - OS) x 5 V
	5 V	EV	EV	Nominal range	
	0 V	OS	OS		
	-5 V	2 x OS - EV	2 x OS - EV		
	-5,88 V			Underloading	

1) EV: User full scale value, OS: User scale offset

6.45 Analogue input module UR20-4AI-UI-16-HD

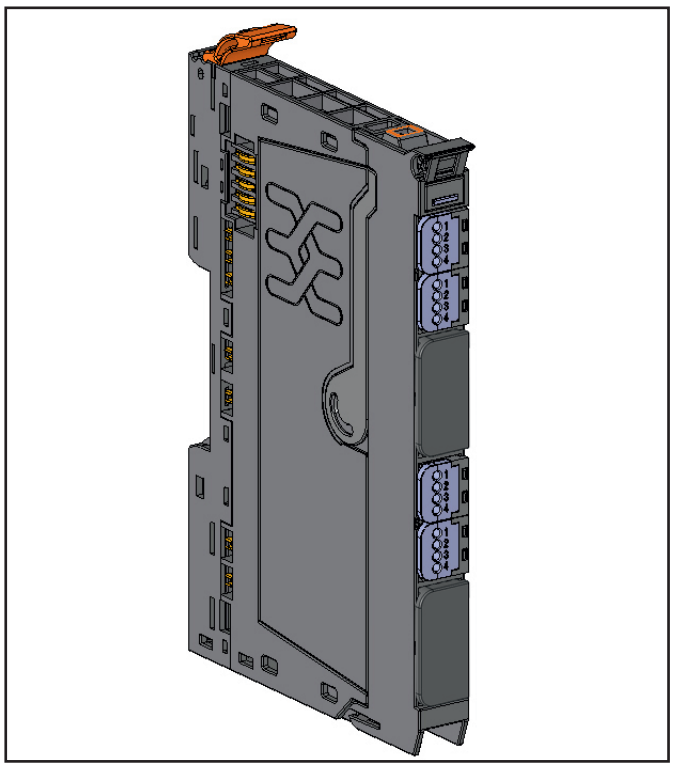

Analogue input module UR20-4AI-UI-16-HD (Item No. 1506920000)

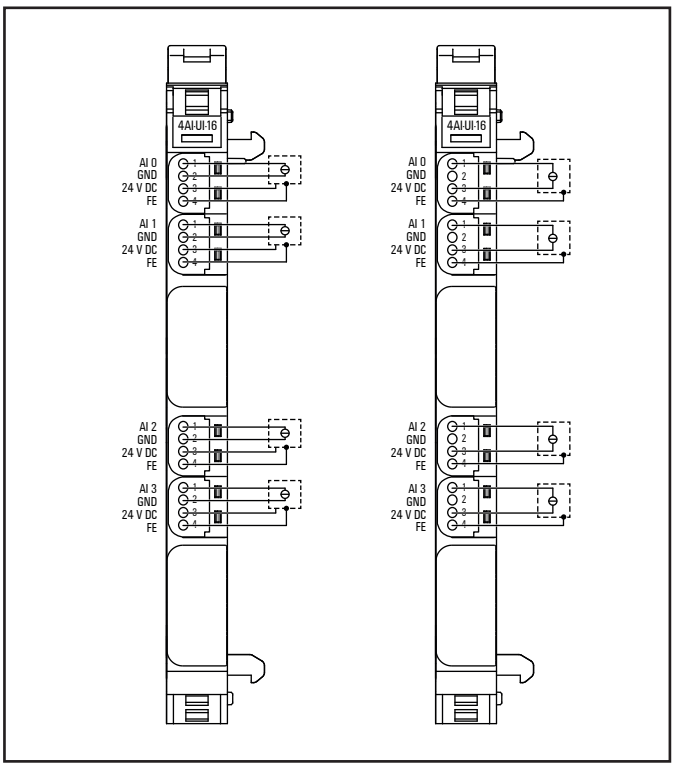

Connection diagram UR20-4AI-UI-16-HD (left 3/4-wire sensor with signal wiring and sensor supply via module electronics, right: 2-wire sensor loop powered by module electronics)

The UR20-4AI-UI-16-HD analogue input module can record up to 4 analogue sensors with ±10 V, ±5 V, 0 ... 10 V, 0 ... 5 V, 2 ... 10 V, 1 ... 5 V, 0 ... 20 mA or 4 ... 20 mA. The resolution is 16 bit per channel. Sensors can be connected to each connector in a 2-wire, 3-wire or 3-wire connection + FE (IDC). The measurement range is defined using parameterisation. A status LED is assigned to each channel. The module electronics supply the connected sensors with power from the input current path (I_{IN}).

Each auxiliary voltage output is loadable with 500 mA and protected against overcurrent. The inputs are protected against voltage surges and overcurrent. Voltages that exceed ±30 V may cause the destruction of the module. As a protection against overcurrent, the module temporarily switches to voltage mode.



	Module status LED Green: Communication over the system bus Red: Error
1.1	Red: channel error
2.1	Red: channel error
5.1	Red: channel error
6.1	Red: channel error

LED indicators UR20-4AI-UI-16-HD, troubleshooting see Chapter 12

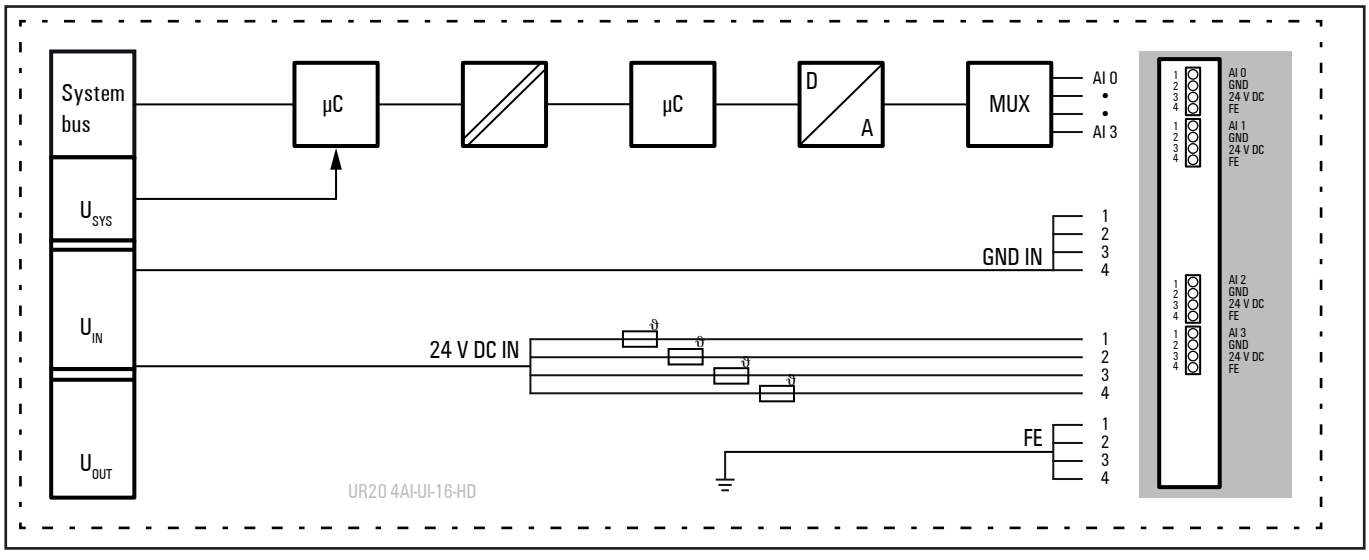

Block diagram UR20-4AI-UI-16-HD

Technical data UR20-4AI-UI-16-HD (Item No. 1506920000)

System data		
Data	Process, parameter and diagnostic data depend on the coupler used, see coupler description.	
Interface	u-remote system bus	
System bus transfer rate	48 Mbps	
Inputs		
Number	4	
Input values	1. Voltage (0 ... 5 V, ±5 V, 0 ... 10 V, ±10 V, 1 ... 5 V, 2 ... 10 V) 2. Current (0 ... 20 mA, 4 ... 20 mA)	
Resolution	16 bits	
Accuracy	0.1 % max. ±50 ppm/K max. max. +10 mV/A	at 25 °C Temperature coefficient additional inaccuracy in the voltage mode due to sensor power supply current
Sensor supply	max. 0.5 A per plug	
Sensor connection	2-wire, 3-wire, 3-wire + FE	
Conversion time	1 ms	
Internal resistance	U: 100 kΩ; I: approx. 45 Ω	
Reverse polarity protection	yes	
Short-circuit-proof	yes	
Response time of the protective circuit	< 50 ms	
Module diagnosis	yes	
Individual channel diagnosis	no	
Supply		
Supply voltage	24 V DC +20 %/-15 %	
Current consumption from system current path I_{SYS}	8 mA	
Current consumption from input current path I_{IN}	25 mA + sensor supply current	
General data		
Weight (operational status)	89 g	
For additional general data, see Section 3.4		

Overview of the editable parameters UR20-4AI-UI-16-HD

Channel	Description	Options[1)]	Default
	Frequency suppression	disabled (0) / 50 Hz (1) / 60 Hz (2) / Average over 16 values (3) / 2 Hz low pass (4)	disabled
0 ... 3	Data format	S5 Data format (0) / S7 Data format (1)	S7 Data format
0 ... 3	Measurement range	0 to 20 mA (0) / 4 to 20 mA (1) / 0 V to 10 V (2) / -10 to 10 V (3) / 0 to 5 V (4) / -5 to 5 V (5) / 1 to 5 V (6) / 2 to 10 V (7) /disabled (8)	disabled

1) Values in brackets for Modbus-TCP (firmware version 02.00.00 and higher), CANopen, EtherCAT and EtherNet/IP via module parameter class

Diagnostic data UR20-4AI-UI-16-HD

Name	Bytes	Bit	Description	Default
Error indicator	0	0	Module error	
		1	Internal error	
		2	External error	
		3	Channel error	0
		4	Error	
		5	Reserved	0
		6	Reserved	0
		7	Parameter error	
Module types	1	0	Module Type	0x05
		1		
		2		
		3		
		4	Reserved	0
		5	Reserved	0
		6	Reserved	0
		7	Reserved	0
Error byte 2	2	0 ... 7	Reserved	0
Error byte 3	3	0 ... 2	Reserved	0
		3	Internal diagnostic FIFO full	
		4	Power supply fault	
		5	Reserved	0
		6	Reserved	0
		7	Reserved	0
Channel type	4	0 ... 6	Channel type	0x74
		7	Reserved	0
Diagnostic bits per channel	5		Number of diagnostic bit per channel	0
Number of channels	6		Number of similar channels per module	4
Channel error	7 ... 10	0 ... 31	Reserved	0
Channel 0 error to Channel 31 error	11 ... 42	0 ... 7	Reserved	0
Time stamp	43-46		time stamp [µs] (32bit)	

Process data[1] inputs UR20-4AI-UI-16-HD

Byte	Format	Description	Remarks
IB0	Word	AI0	
IB1			
IB2	Word	AI1	
IB3			
IB4	Word	AI2	
IB5			
IB6	Word	AI3	
IB7			

1) Internal process data mapping with data format “Standard”. Depending on the fieldbus specification and the data format of the communicating fieldbus components the bytes and/or words can be reversed during data transfer.

A diagnosis is indicated when a diagnosis limit value has been exceeded.

Diagnosis limit values

Measurement range	Lower limit	Upper limit
0 ... 20 mA	-	21 mA
4 ... 20 mA	3.6 mA	21 mA
0 ... 10 V	-	10.5 V
2 ... 10 V	1.8 V	10.5 V
±10 V	-10.5 V	10.5 V
0 ... 5 V	-	5.25 V
1 ... 5 V	0.9 V	5.25 V
±5 V	-5.25 V	5.25 V

Measurement range UR20-4AI-UI-16-HD

Measurement range	Current (I) / Voltage (U)	Decimal (D)	Hexadecimal	Range	Conversion
0 – 20 mA Siemens S7 format	23.52 mA	32511	0x7EFF	Overloading	D = 27648 x I / 20 I = D x 20 / 27648
	20 mA	27648	0x6C00	Nominal range	
	10 mA	13824	0x3600		
	0 mA	0	0x0000		
0 – 20 mA Siemens S5 format	23.52 mA	19268	0x4B44	Overloading	D = 16384 x I / 20 I = D x 20 / 16384
	20 mA	16384	0x4000	Nominal range	
	10 mA	8192	0x2000		
	0 mA	0	0x0000		
4 – 20 mA Siemens S7 format	22.81 mA	32511	0x7EFF	Overloading	D = 27648 x (I – 4) / 16 I= D x 16 / 27648 + 4
	20 mA	27648	0x6C00	Nominal range	
	12 mA	13824	0x3600		
	4 mA	0	0x0000		
	1.19 mA	-4864	0xED00	Underloading	
4 – 20 mA Siemens S5 format	22.82 mA	19268	0x4B44	Overloading	D = 27648 x (I – 4) / 16 I = D x 16 / 16384 + 4
	20 mA	16384	0x4000	Nominal range	
	12 mA	8192	0x2000		
	4 mA	0	0x0000		
	0.8 mA	-3277	0xF333	Underloading	
0 – 10 V Siemens S7 format	11.76 V	32511	0x7EFFh	Overloading	D = 27648 x U/10 U = D x 10 / 27648
	10 V	27648	0x6C00	Nominal range	
	5 V	13824	0x3600		
	0 V	0	0x0000		
0 – 10 V Siemens S5 format	11.76 V	19268	0x4B44	Overloading	D = 16384 x U / 10 U = D x 10 / 16384
	10 V	16384	0x4000	Nominal range	
	5 V	8192	0x2000		
	0 V	0	0x0000		
±10 V Siemens S7 format	11.76 V	32511	0x7EFF	Overloading	D = 27648 x U / 10 U = D x 10 / 27648
	10 V	27648	0x6C00	Nominal range	
	5 V	13824	0x3600		
	0 V	0	0x0000		
	-5 V	-13824	0xCA00		
	-10 V	-27648	0x9400		
	-11.76 V	-32511	0x8100	Underloading	

Measurement range UR20-4AI-UI-16-HD

Measurement range	Voltage (U)	Decimal (D)	Hexadecimal	Range	Conversion
±10 V Siemens S5 format	11,76 V	19268	0x4B44	Overloading	D = 16384 x U / 10 U = D x 10 / 16384
	10 V	16384	0x4000	Nominal range	
	5 V	8192	0x2000		
	0 V	0	0x0000		
	-5 V	-8192	0xE000		
	-10 V	-16384	0xC000		
	-11,76 V	-19268	0xB4BC	Underloading	
2 ... 10 V Siemens S7 format	11,41 V	32511	0x7EFF	Overloading	D = 27648 x (U – 2) / 8 U = D x 8 / 27648 + 2
	10 V	27648	0x6C00	Nominal range	
	6 V	13824	0x3600		
	2 V	0	0x0000		
	0,59 V	-4864	0xED00	Underloading	
2 ... 10 V Siemens S5 format	11,41 V	19268	0x4B44	Overloading	D = 16384 x (U – 2) / 8 U = D x 8 / 16384 + 2
	10 V	16384	0x4000	Nominal range	
	6 V	8192	0x2000		
	2V	0	0x0000		
	0,40 V	-3277	0xF333	Underloading	
1 ... 5 V Siemens S7 format	5,7 V	32511	0x7EFF	Overloading	D = 27648 x (U – 1) / 4 U = D x 4 / 27648 + 1
	5 V	27648	0x6C00	Nominal range	
	3 V	13824	0x3600		
	1 V	0	0x0000		
	0,30 V	-4864	0xED00	Underloading	
1 ... 5 V Siemens S5 format	5,7 V	19268	0x4B44	Overloading	D = 16384 x (U – 1) / 4 U = D x 4 / 16384 + 1
	5 V	16384	0x4000	Nominal range	
	3 V	8192	0x2000		
	1 V	0	0x0000		
	0,20 V	-3277	0xF333	Underloading	
0 ... 5 V Siemens S7 format	5,88 V	32511	0x7EFF	Overloading	D = 27648 x U / 5 U = D x 5 / 27648
	5 V	27648	0x6C00	Nominal range	
	2,5 V	13824	0x3600		
	0 V	0	0x0000		
0 ... 5 V Siemens S5 format	5,88 V	19268	0x4B44	Overloading	D = 16384 x U / 5 U = D x 5 / 16384
	5 V	16384	0x4000	Nominal range	
	2,5 V	8192	0x2000		
	0 V	0	0x0000		

Measurement range UR20-4AI-UI-16-HD

Measurement range	Voltage (U)	Decimal (D)	Hexadecimal	Range	Conversion
±5 V Siemens S7 format	5,88 V	32511	0x7EFF	Overloading	D = 27648 x U / 5 U = D x 5 / 27648
	5 V	27648	0x6C00	Nominal range	
	2,5	13824	0x3600		
	0 V	0	0x0000		
	-2,5 V	-13824	0xCA00		
	-5 V	-27648	0x9400		
	-5,88 V	-32511	0x8100	Underloading	
±5 V Siemens S5 format	5,88 V	19268	0x4B44	Overloading	D = 16384 x U / 5 U = D x 5 / 16384
	5 V	16384	0x4000	Nominal range	
	2,5	8192	0x2000		
	0 V	0	0x0000		
	-2,5 V	-8192	0xE000		
	-5 V	-16384	0xC000		
	-5,88 V	-19268	0xB4BC	Underloading	

In the case of undervoltage (power supply), the input value 0x7FFF is displayed in S7 format.
In S5 format, the 3 least significant bits remain the status they had before the undervoltage, so the input value is in the range from 0x7FF8 to 0x7FFF.

The following applies for all S7 ranges:
input value > overload range = 0x7FFF
input value < underload range = 0x8000
Additional status bits are set for S5

Digital measured value representation in Siemens S5 format

Data bit	7	6	5	4	3	2	1	0
Byte 0 (High Byte)	2^{12}	2^{11}	2^{10}	2^{9}	2^{8}	2^{7}	2^{6}	2^{5}
Byte 1 (low byte)	2^{4}	2^{3}	2^{2}	2^{1}	2^{0}	A	F	0

A: 0 = not active / 1 = active
F: 0 = no line break / 1 = line break
0: 0 = 0 to 4095 units / 1 = ±4096 units (overflow)
Representation in two's complement, 2^{12} = VZ in representation as amount and signs

6.46 Analogue input module UR20-4AI-UI-16-DIAG-HD



Analogue input module UR20-4AI-UI-16-DIAG-HD (Item No. 1506910000)

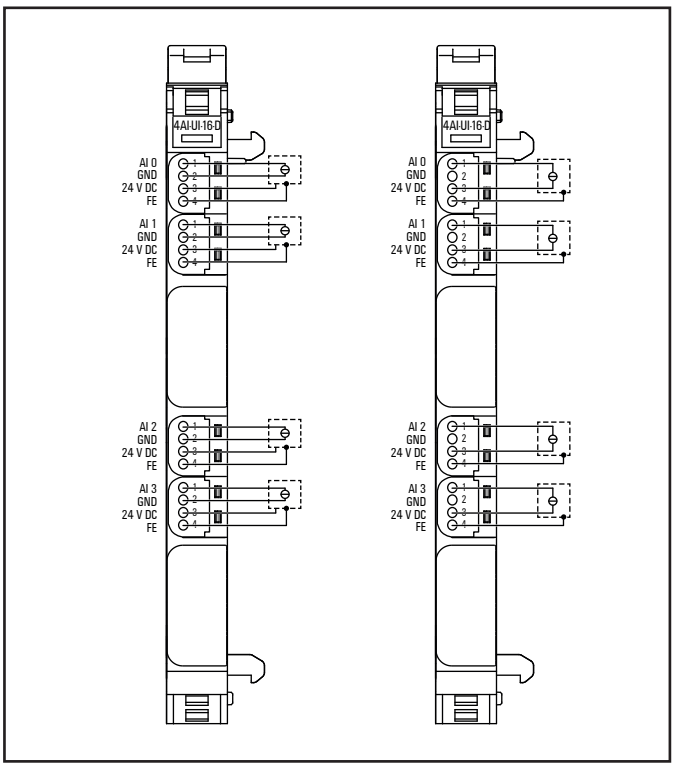

Connection diagram UR20-4AI-UI-16-DIAG-HD (left 3/4-wire sensor with signal wiring and sensor supply via module electronics, right: 2-wire sensor loop powered by module electronics)

The UR20-4AI-UI-16-DIAG-HD analogue input module can record up to 4 analogue sensors with ±10 V, ±5 V, 0 ... 10 V, 0 ... 5 V, 2 ... 10 V, 1 ... 5 V, 0 ... 20 mA or 4 ... 20 mA. The resolution is 16 bit per channel. Sensors can be connected to each connector in a 2-wire, 3-wire or 3-wire connection + FE (IDC). The measurement range is defined using parameterisation. A status LED is assigned to each channel. The module electronics supply the connected sensors with power from the input current path (I_{IN}).

Each auxiliary voltage output is loadable with 500 mA and protected against overcurrent. The inputs are protected against voltage surges and overcurrent. Voltages that exceed ±30 V may cause the destruction of the module. As a protection against overcurrent, the module temporarily switches to voltage mode.

The module provides individual channel diagnosis with channel related error messages.



	Module status LED Green: Communication over the system bus Red: Error
1.1	Red: channel error
1.2	Red: +24 V short circuit or line break (with current < 1 mA)
2.1	Red: channel error
2.2	Red: +24 V short circuit or line break (with current < 1 mA)
5.1	Red: channel error
5.2	Red: +24 V short circuit or line break (with current < 1 mA)
6.1	Red: channel error
6.2	Red: +24 V short circuit or line break (with current < 1 mA)

LED indicators UR20-4AI-UI-16-DIAG-HD, troubleshooting see Chapter 12

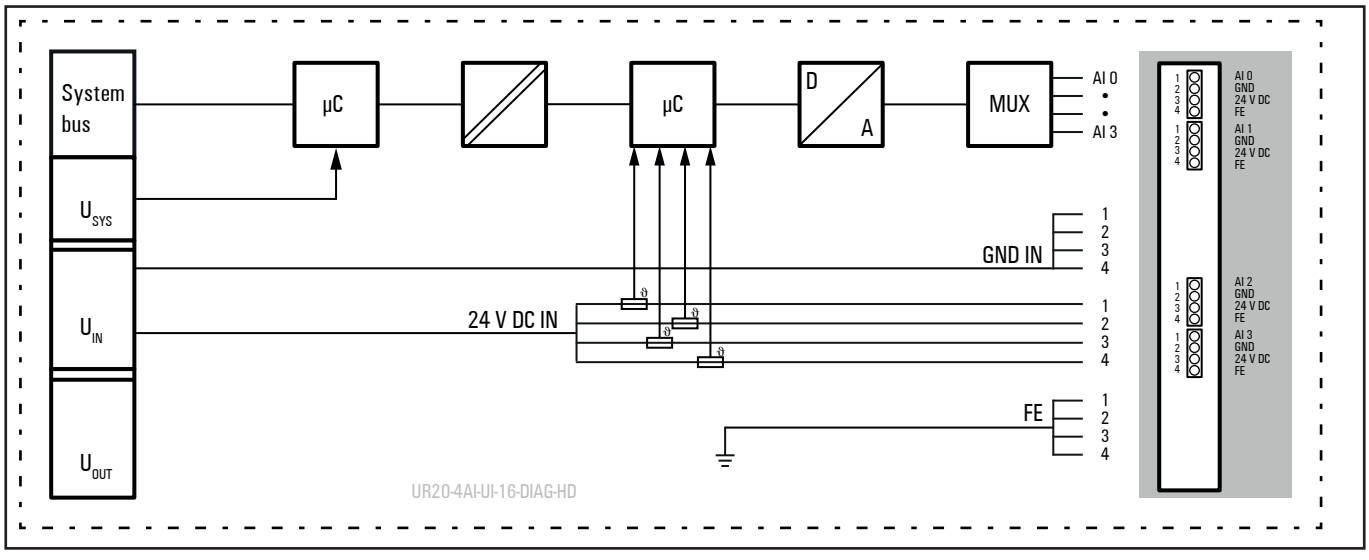

Block diagram UR20-4AI-UI-16-DIAG-HD

Technical data UR20-4AI-UI-16-DIAG-HD (Item No. 1506910000)

System data		
Data	Process, parameter and diagnostic data depend on the coupler used, see coupler description.	
Interface	u-remote system bus	
System bus transfer rate	48 Mbps	
Inputs		
Number	4	
Input values	1. Voltage (0 ... 5 V, ±5 V, 0 ... 10 V, ±10 V, 1 ... 5 V, 2 ... 10 V) 2. Current (0 ... 20 mA, 4 ... 20 mA)	
Resolution	16 bits	
Accuracy	0.1 % max. ±50 ppm/K max. max. +10 mV/A	at 25 °C Temperature coefficient additional inaccuracy in the voltage mode due to sensor power supply current
Sensor supply	max. 0.5 A per plug	
Sensor connection	2-wire, 3-wire, 3-wire + FE	
Conversion time	1 ms	
Internal resistance	U: 100 kΩ; I: approx. 45 Ω	
Reverse polarity protection	yes	
Short-circuit-proof	yes	
Response time of the protective circuit	< 50 ms	
Module diagnosis	yes	
Individual channel diagnosis	yes	
Supply		
Supply voltage	24 V DC +20 %/-15 %	
Current consumption from system current path I_{SYS}	8 mA	
Current consumption from input current path I_{IN}	25 mA + sensor supply current	
General data		
Weight (operational status)	89 g	
For additional general data, see Section 3.4		

Overview of the editable parameters UR20-4AI-UI-16-DIAG-HD

Channel	Description	Options[1)]	Default
	Frequency suppression	disabled (0) / 50 Hz (1) / 60 Hz (2) / Average over 16 values (3) / 2 Hz low pass (4)	disabled
0 ... 3	Data format	S5 Data format (0) / S7 Data format (1)	S7 Data format
0 ... 3	Measurement range	0 to 20 mA (0) / 4 to 20 mA (1) / 0 V to 10 V (2) / -10 to 10 V (3) / 0 to 5 V (4) / -5 to 5 V (5) / 1 to 5 V (6) / 2 to 10 V (7) /disabled (8)	disabled

1) Values in brackets for Modbus-TCP (firmware version 02.00.00 and higher), CANopen, EtherCAT and EtherNet/IP via module parameter class

Diagnostic data UR20-4AI-UI-16-DIAG-HD

Name	Byte	Bit	Description	Default
Error indicator	0	0	Module error	
		1	Internal error	
		2	External error	
		3	Channel error	
		4	Error	
		5	Power supply fault	
		6	Reserved	0
		7	Parameter error	
Module type	1	0	Module type	0x05
		1		
		2		
		3		
		4	Channel information available	1
		5	Reserved	0
		6	Reserved	0
		7	Reserved	0
Error byte 2	2	0 ... 7	Reserved	0
Error byte 3	3	0 ... 2	Reserved	0
		3	Internal diagnostic FIFO full	
		4	Power supply fault	
		5 ... 7	Reserved	0
Channel type	4	0 ... 6	Channel type	0x74
		7	Reserved	0
Diagnostic bits per channel	5		Number of diagnostic bit per channel	8
Number of channels	6		Number of similar channels per module	4
Channel error	7	0	Error at channel 0	
		1	Error at channel 1	
		2	Error at channel 2	
		3	Error at channel 3	
		4 ... 7	Reserved	0
Channel error	8	8 ... 15	Reserved	0
Channel error	9	16 ... 23	Reserved	0
Channel error	10	24 ... 31	Reserved	0
Channel 0 error	11	0	Parameter Error	
		1	Overload	
		2	Line break sensor supply	
		3	External short-circuit	
		4	Line break signal	
		5	Reserved	0
		6	Lower limit exceeded	
		7	Upper limit exceeded	

Diagnostic data UR20-4AI-UI-16-DIAG-HD

Name	Byte	Bit	Description	Default
Channel 1 error	12	0	Parameter Error	
		1	Overload	
		2	Line break sensor supply	
		3	External short-circuit	
		4	Line break signal	
		5	Reserved	0
		6	Lower limit exceeded	
		7	Upper limit exceeded	
Channel 2 error	13	0	Parameter Error	
		1	Overload	
		2	Line break sensor supply	
		3	External short-circuit	
		4	Line break signal	
		5	Reserved	0
		6	Lower limit exceeded	
		7	Upper limit exceeded	
Channel 3 error	14	0	Parameter Error	
		1	Overload	
		2	Line break sensor supply	
		3	External short-circuit	
		4	Line break signal	
		5	Reserved	0
		6	Lower limit exceeded	
		7	Upper limit exceeded	
Channel 4 error to Channel 31 error	15 ... 42	0 ... 7	Reserved	0
Time stamp	43-46		time stamp [µs] (32bit)	

Process data[1] inputs UR20-4AI-UI-16-DIAG-HD

Byte	Format	Description
IB0	Word	AI0
IB1		
IB2	Word	AI1
IB3		
IB4	Word	AI2
IB5		
IB6	Word	AI3
IB7		

1) Internal process data mapping with data format “Standard”. Depending on the fieldbus specification and the data format of the communicating fieldbus components the bytes and/or words can be reversed during data transfer.

A diagnosis is indicated when a diagnosis limit value has been exceeded.

Diagnosis limit values

Measurement range	Lower limit	Upper limit
0 ... 20 mA	–	21 mA
4 ... 20 mA	3.6 mA	21 mA
0 ... 10 V	–	10.5 V
2 ... 10 V	1.8 V	10.5 V
±10 V	-10.5 V	10.5 V
0 ... 5 V	–	5.25 V
1 ... 5 V	0.9 V	5.25 V
±5 V	-5.25 V	5.25 V

Measurement range UR20-4AI-UI-16-DIAG-HD

Measurement range	Current (I) / Voltage (U)	Decimal (D)	Hexadecimal	Range	Conversion
0 – 20 mA Siemens S7 format	23.52 mA	32511	0x7EFF	Overloading	D = 27648 x I / 20 I = D x 20 / 27648
	20 mA	27648	0x6C00	Nominal range	
	10 mA	13824	0x3600		
	0 mA	0	0x0000		
0 – 20 mA Siemens S5 format	23.52 mA	19268	0x4B44	Overloading	D = 16384 x I / 20 I = D x 20 / 16384
	20 mA	16384	0x4000	Nominal range	
	10 mA	8192	0x2000		
	0 mA	0	0x0000		
4 – 20 mA Siemens S7 format	22.81 mA	32511	0x7EFF	Overloading	D = 27648 x (I – 4) / 16 I= D x 16 / 27648 + 4
	20 mA	27648	0x6C00	Nominal range	
	12 mA	13824	0x3600		
	4 mA	0	0x0000		
	1.19 mA	-4864	0xED00	Underloading	
4 – 20 mA Siemens S5 format	22.82 mA	19268	0x4B44	Overloading	D = 27648 x (I – 4) / 16 I = D x 16 / 16384 + 4
	20 mA	16384	0x4000	Nominal range	
	12 mA	8192	0x2000		
	4 mA	0	0x0000		
	0.8 mA	-3277	0xF333	Underloading	
0 – 10 V Siemens S7 format	11.76 V	32511	0x7EFFh	Overloading	D = 27648 x U/10 U = D x 10 / 27648
	10 V	27648	0x6C00	Nominal range	
	5 V	13824	0x3600		
	0 V	0	0x0000		
0 – 10 V Siemens S5 format	11.76 V	19268	0x4B44	Overloading	D = 16384 x U / 10 U = D x 10 / 16384
	10 V	16384	0x4000	Nominal range	
	5 V	8192	0x2000		
	0 V	0	0x0000		
±10 V Siemens S7 format	11.76 V	32511	0x7EFF	Overloading	D = 27648 x U / 10 U = D x 10 / 27648
	10 V	27648	0x6C00	Nominal range	
	5 V	13824	0x3600		
	0 V	0	0x0000		
	-5 V	-13824	0xCA00		
	-10 V	-27648	0x9400		
	-11.76 V	-32511	0x8100	Underloading	

Measurement range UR20-4AI-UI-16-DIAG-HD

Measurement range	Voltage (U)	Decimal (D)	Hexadecimal	Range	Conversion
±10 V Siemens S5 format	11,76 V	19268	0x4B44	Overloading	D = 16384 x U / 10 U = D x 10 / 16384
	10 V	16384	0x4000	Nominal range	
	5 V	8192	0x2000		
	0 V	0	0x0000		
	-5 V	-8192	0xE000		
	-10 V	-16384	0xC000		
	-11,76 V	-19268	0xB4BC	Underloading	
2 ... 10 V Siemens S7 format	11,41 V	32511	0x7EFF	Overloading	D = 27648 x (U – 2) / 8 U = D x 8 / 27648 + 2
	10 V	27648	0x6C00	Nominal range	
	6 V	13824	0x3600		
	2 V	0	0x0000		
	0,59 V	-4864	0xED00	Underloading	
2 ... 10 V Siemens S5 format	11,41 V	19268	0x4B44	Overloading	D = 16384 x (U – 2) / 8 U = D x 8 / 16384 + 2
	10 V	16384	0x4000	Nominal range	
	6 V	8192	0x2000		
	2V	0	0x0000		
	0,40 V	-3277	0xF333	Underloading	
1 ... 5 V Siemens S7 format	5,7 V	32511	0x7EFF	Overloading	D = 27648 x (U – 1) / 4 U = D x 4 / 27648 + 1
	5 V	27648	0x6C00	Nominal range	
	3 V	13824	0x3600		
	1 V	0	0x0000		
	0,30 V	-4864	0xED00	Underloading	
1 ... 5 V Siemens S5 format	5,7 V	19268	0x4B44	Overloading	D = 16384 x (U – 1) / 4 U = D x 4 / 16384 + 1
	5 V	16384	0x4000	Nominal range	
	3 V	8192	0x2000		
	1 V	0	0x0000		
	0,20 V	-3277	0xF333	Underloading	
0 ... 5 V Siemens S7 format	5,88 V	32511	0x7EFF	Overloading	D = 27648 x U / 5 U = D x 5 / 27648
	5 V	27648	0x6C00	Nominal range	
	2,5 V	13824	0x3600		
	0 V	0	0x0000		
0 ... 5 V Siemens S5 format	5,88 V	19268	0x4B44	Overloading	D = 16384 x U / 5 U = D x 5 / 16384
	5 V	16384	0x4000	Nominal range	
	2,5 V	8192	0x2000		
	0 V	0	0x0000		

Measurement range UR20-4AI-UI-16-DIAG-HD

Measurement range	Voltage (U)	Decimal (D)	Hexadecimal	Range	Conversion
±5 V Siemens S7 format	5,88 V	32511	0x7EFF	Overloading	D = 27648 x U / 5 U = D x 5 / 27648
	5 V	27648	0x6C00	Nominal range	
	2,5	13824	0x3600		
	0 V	0	0x0000		
	-2,5 V	-13824	0xCA00		
	-5 V	-27648	0x9400		
	-5,88 V	-32511	0x8100	Underloading	
±5 V Siemens S5 format	5,88 V	19268	0x4B44	Overloading	D = 16384 x U / 5 U = D x 5 / 16384
	5 V	16384	0x4000	Nominal range	
	2,5	8192	0x2000		
	0 V	0	0x0000		
	-2,5 V	-8192	0xE000		
	-5 V	-16384	0xC000		
	-5,88 V	-19268	0xB4BC	Underloading	

In the case of undervoltage (power supply), the input value 0x7FFF is displayed in S7 format.
In S5 format, the 3 least significant bits remain the status they had before the undervoltage, so the input value is in the range from 0x7FF8 to 0x7FFF.

The following applies for all S7 ranges:
input value > overload range = 0x7FFF
input value < underload range = 0x8000
Additional status bits are set for S5

Digital measured value representation in Siemens S5 format

Data bit	7	6	5	4	3	2	1	0
Byte 0 (High Byte)	2^{12}	2^{11}	2^{10}	2^{9}	2^{8}	2^{7}	2^{6}	2^{5}
Byte 1 (low byte)	2^{4}	2^{3}	2^{2}	2^{1}	2^{0}	A	F	0

A: 0 = not active / 1 = active
F: 0 = no line break / 1 = line break
0: 0 = 0 to 4095 units / 1 = ±4096 units (overflow)
Representation in two's complement, 2^{12} = VZ in representation as amount and signs

6.47 Analogue input module UR20-4AI-UI-12

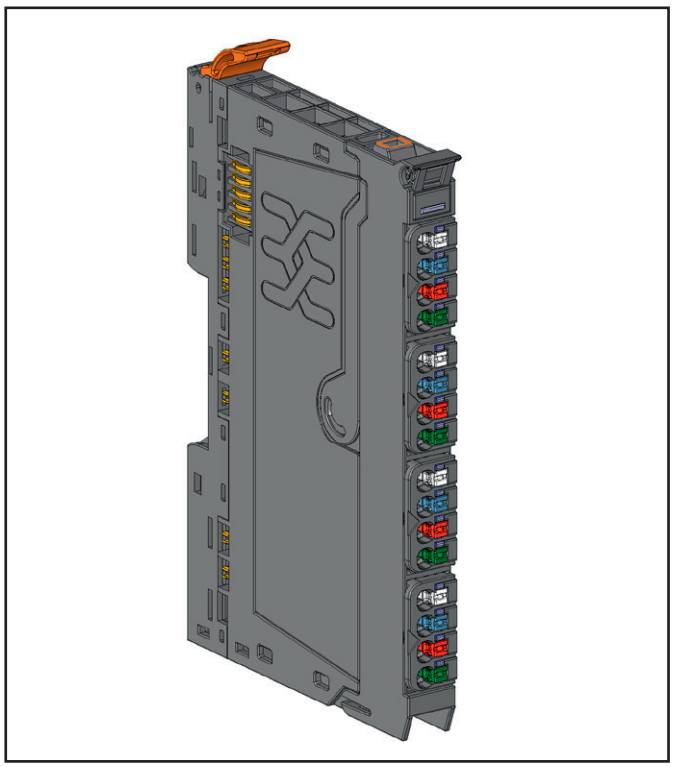

Analogue input module UR20-4AI-UI-12 (Item No. 1394390000)

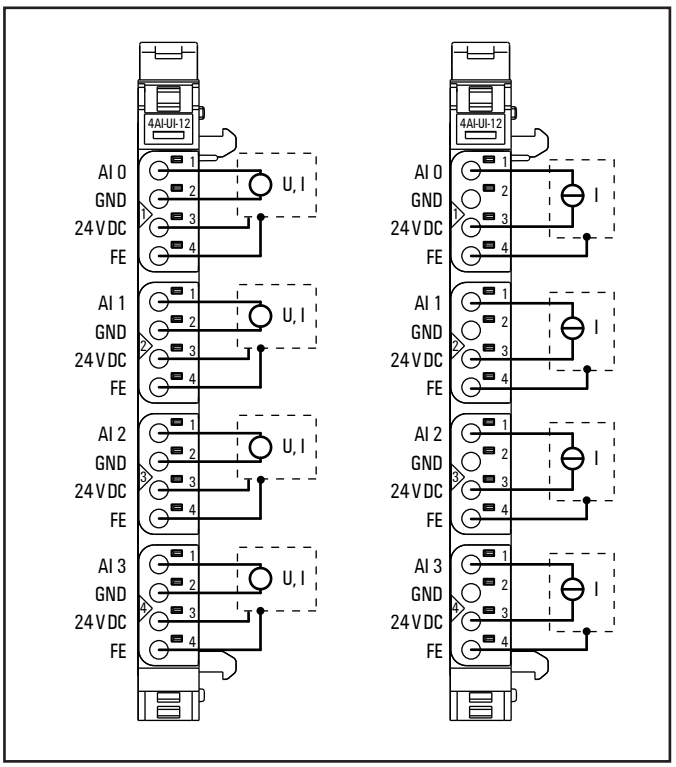

Connection diagram UR20-4AI-UI-12 (left 3/4-wire sensor with signal wiring and sensor supply via module electronics, right: 2-wire sensor loop powered by module electronics)

The analogue input module UR20-4AI-UI-12 can record up to 4 analogue sensors with ±10 V, ±5 V, 0 ... 10 V, 0 ... 5 V, 2 ... 10 V, 1 ... 5 V, 0 ... 20 mA or 4 ... 20 mA. The resolution is 12 bit per channel. Sensors can be connected to each connector in a 2-wire, 3-wire or 3-wire connection + FE. The measurement range is defined using parameterisation. A status LED is assigned to each channel. The module electronics supply the connected sensors with power from the input current path (I_{IN}).

The inputs are protected against voltage surges and overcurrent. Voltages that exceed ±30 V may cause the destruction of the module. As a protection against overcurrent, the module temporarily switches to voltage mode.

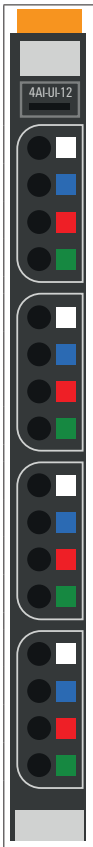

	Status LED module Green: Communication over the system bus Red: No communication on system bus or diagnostic message displayed
1.1	Red: channel error input 0
2.1	Red: channel error input 1
3.1	Red: channel error input 2
4.1	Red: channel error input 3

LED indicators UR20-4AI-UI-12, troubleshooting see Chapter 12

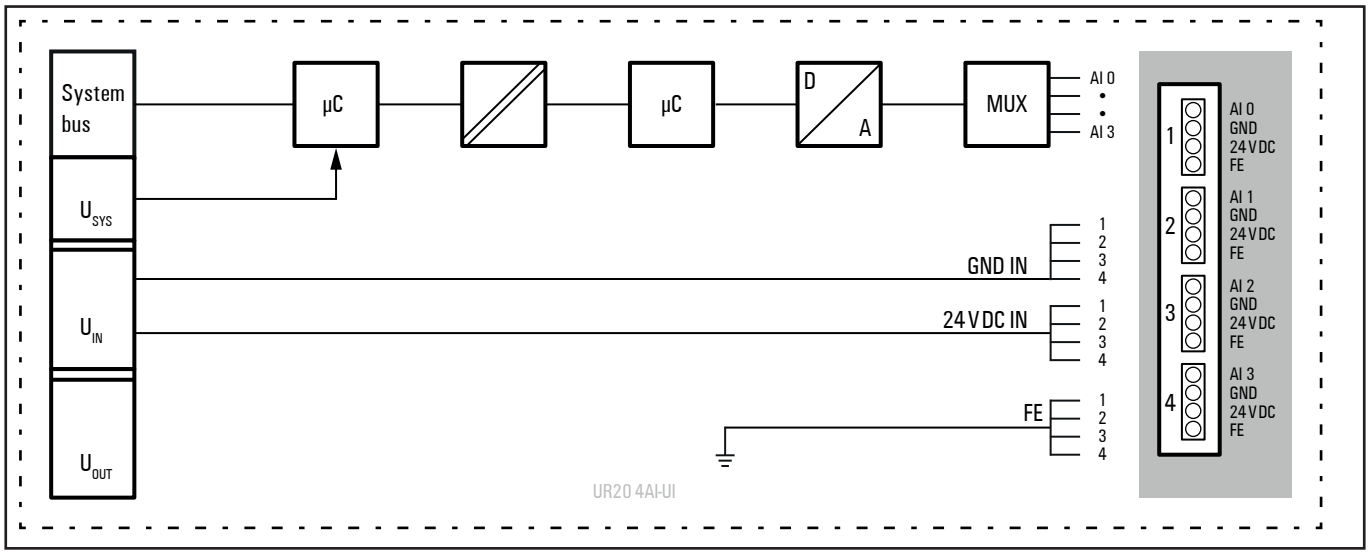

Block diagram UR20-4AI-UI-12

Technical data UR20-4AI-UI-12 (Item No. 1394390000)

System data		
Data	Process, parameter and diagnostic data depend on the coupler used, see coupler description.	
Interface	u-remote system bus	
System bus transfer rate	48 Mbps	
Inputs		
Number	4	
Input values	1. Voltage (0 ... 5 V, ±5 V, 0 ... 10 V, ±10 V, 1 ... 5 V, 2 ...10 V) 2. Current (0 ... 20 mA, 4 ... 20 mA)	
Resolution	12 bits	
Accuracy	0,25 % max. ±50 ppm/K max. max. +10 mV/A	at 25 °C Temperature coefficient additional inaccuracy in the voltage mode due to sensor power supply current
Sensor supply	max. 2 A per plug, total max. 8 A	
Sensor connection	2-wire, 3-wire, 3-wire + FE	
Conversion time	1 ms	
Internal resistance	U: 100 kΩ; I: approx. 42 Ω	
Reverse polarity protection	yes	
Short-circuit-proof	yes	
Response time of the protective circuit	< 50 ms	
Module diagnosis	yes	
Individual channel diagnosis	no	
Supply		
Supply voltage	24 V DC +20 %/-15 %	
Current consumption from system current path I_{SYS}	8 mA	
Current consumption from input current path I_{IN}	25 mA + sensor supply current	
General data		
Weight (operational status)	87 g	
For additional general data, see Section 3.4		

Overview of the editable parameters UR20-4AI-UI-12

Channel	Description	Options[1)]	Default
	Frequency suppression	disabled (0) / 50 Hz (1) / 60 Hz (2) / Average over 16 values (3) / 2 Hz low pass (4)	disabled
0 ... 3	Data format	S5 Data format (0) / S7 Data format (1)	S7 Data format
0 ... 3	Measurement range	0 to 20 mA (0) / 4 to 20 mA (1) / 0 V to 10 V (2) / -10 to 10 V (3) / 0 to 5 V (4) / -5 to 5 V (5) / 1 to 5 V (6) / 2 to 10 V (7) / disabled (8)	disabled

1) Values in brackets for Modbus-TCP (firmware version 02.00.00 and higher), CANopen, EtherCAT and EtherNet/IP via module parameter class

Diagnostic data UR20-4AI-UI-12

Name	Bytes	Bit	Description	Default
Error indicator	0	0	Module error	
		1	Internal error	
		2	External error	
		3	Channel error	0
		4	Error	
		5	Reserved	0
		6	Reserved	0
		7	Parameter error	
Module type	1	0	Module Type	0x05
		1		
		2		
		3		
		4	Reserved	0
		5	Reserved	0
		6	Reserved	0
		7	Reserved	0
Error byte 2	2	0 ... 7	Reserved	0
Error byte 3	3	0 ... 2	Reserved	0
		3	Internal diagnostic FIFO full	
		4	Power supply fault	
		5	Reserved	0
		6	Reserved	0
		7	Reserved	0
Channel type	4	0 ... 6	Channel type	0x74
		7	Reserved	0
Diagnostic bits per channel	5		Number of diagnostic bit per channel	0
Number of channels	6		Number of similar channels per module	4
Channel error	7 ... 10	0 ... 31	Reserved	0
Channel 0 error to Channel 31 error	11 ... 42	0 ... 7	Reserved	0
Time stamp	43-46		time stamp [µs] (32bit)	

Process data[1] inputs UR20-4AI-UI-12

Byte	Format	Description
IB0	Word	AI0
IB1		
IB2	Word	AI1
IB3		
IB4	Word	AI2
IB5		
IB6	Word	AI3
IB7		

1) Internal process data mapping with data format "Standard". Depending on the fieldbus specification and the data format of the communicating fieldbus components the bytes and/or words can be reversed during data transfer.

A diagnosis is indicated when a diagnosis limit value has been exceeded.

Diagnosis limit values

Measurement range	Lower limit	Upper limit
0 ... 20 mA	-	21 mA
4 ... 20 mA	3.6 mA	21 mA
0 ... 10 V	-	10.5 V
2 ... 10 V	1.8 V	10.5 V
±10 V	-10.5 V	10.5 V
0 ... 5 V	-	5.25 V
1 ... 5 V	0.9 V	5.25 V
±5 V	-5.25 V	5.25 V

Measurement range UR20-4AI-UI-12

Measurement range	Current (I) / Voltage (U)	Decimal (D)	Hexadecimal	Range	Conversion
0 – 20 mA Siemens S7 format	23.52 mA	32511	0x7EFF	Overloading	D = 27648 x I / 20 I = D x 20 / 27648
	20 mA	27648	0x6C00	Nominal range	
	10 mA	13824	0x3600		
	0 mA	0	0x0000		
0 – 20 mA Siemens S5 format	23.52 mA	19268	0x4B44	Overloading	D = 16384 x I / 20 I = D x 20 / 16384
	20 mA	16384	0x4000	Nominal range	
	10 mA	8192	0x2000		
	0 mA	0	0x0000		
4 – 20 mA Siemens S7 format	22.81 mA	32511	0x7EFF	Overloading	D = 27648 x (I – 4) / 16 I= D x 16 / 27648 + 4
	20 mA	27648	0x6C00	Nominal range	
	12 mA	13824	0x3600		
	4 mA	0	0x0000		
	1.19 mA	-4864	0xED00	Underloading	
4 – 20 mA Siemens S5 format	22.82 mA	19268	0x4B44	Overloading	D = 27648 x (I – 4) / 16 I = D x 16 / 16384 + 4
	20 mA	16384	0x4000	Nominal range	
	12 mA	8192	0x2000		
	4 mA	0	0x0000		
	0.8 mA	-3277	0xF333	Underloading	
0 – 10 V Siemens S7 format	11.76 V	32511	0x7EFF	Overloading	D = 27648 x U/10 U = D x 10 / 27648
	10 V	27648	0x6C00	Nominal range	
	5 V	13824	0x3600		
	0 V	0	0x0000		
0 – 10 V Siemens S5 format	11.76 V	19268	0x4B44	Overloading	D = 16384 x U / 10 U = D x 10 / 16384
	10 V	16384	0x4000	Nominal range	
	5 V	8192	0x2000		
	0 V	0	0x0000		
±10 V Siemens S7 format	11,76 V	32511	0x7EFF	Overloading	D = 27648 x U / 10 U = D x 10 / 27648
	10 V	27648	0x6C00	Nominal range	
	5 V	13824	0x3600		
	0 V	0	0x0000		
	-5 V	-13824	0xCA00		
	-10 V	-27648	0x9400		
	-11,76 V	-32511	0x8100	Underloading	

Measurement range UR20-4AI-UI-12

Measurement range	Voltage (U)	Decimal (D)	Hexadezimal	Range	Conversion
±10 V Siemens S5 format	11,76 V	19268	0x4B44	Overloading	D = 16384 x U / 10 U = D x 10 / 16384
	10 V	16384	0x4000	Nominal range	
	5 V	8192	0x2000		
	0 V	0	0x0000		
	-5 V	-8192	0xE000		
	-10 V	-16384	0xC000		
	-11,76 V	-19268	0xB4BC	Underloading	
2 ... 10 V Siemens S7 format	11,41 V	32511	0x7EFF	Overloading	D = 27648 x (U – 2) / 8 U = D x 8 / 27648 + 2
	10 V	27648	0x6C00	Nominal range	
	6 V	13824	0x3600		
	2 V	0	0x0000		
	0,59 V	-4864	0xED00	Underloading	
2 ... 10 V Siemens S5 format	11,41 V	19268	0x4B44	Overloading	D = 16384 x (U – 2) / 8 U = D x 8 / 16384 + 2
	10 V	16384	0x4000	Nominal range	
	6 V	8192	0x2000		
	2V	0	0x0000		
	0,40 V	-3277	0xF333	Underloading	
1 ... 5 V Siemens S7 format	5,7 V	32511	0x7EFF	Overloading	D = 27648 x (U – 1) / 4 U = D x 4 / 27648 + 1
	5 V	27648	0x6C00	Nominal range	
	3 V	13824	0x3600		
	1 V	0	0x0000		
	0,30 V	-4864	0xED00	Underloading	
1 ... 5 V Siemens S5 format	5,7 V	19268	0x4B44	Overloading	D = 16384 x (U – 1) / 4 U = D x 4 / 16384 + 1
	5 V	16384	0x4000	Nominal range	
	3 V	8192	0x2000		
	1 V	0	0x0000		
	0,20 V	-3277	0xF333	Underloading	
0 ... 5 V Siemens S7 format	5,88 V	32511	0x7EFF	Overloading	D = 27648 x U / 5 U = D x 5 / 27648
	5 V	27648	0x6C00	Nominal range	
	2,5 V	13824	0x3600		
	0 V	0	0x0000		
0 ... 5 V Siemens S5 format	5,88 V	19268	0x4B44	Overloading	D = 16384 x U / 5 U = D x 5 / 16384
	5 V	16384	0x4000	Nominal range	
	2,5 V	8192	0x2000		
	0 V	0	0x0000		

Measurement range UR20-4AI-UI-12

Measurement range	Voltage (U)	Decimal (D)	Hexadezimal	Range	Conversion
±5 V Siemens S7 format	5,88 V	32511	0x7EFF	Overloading	D = 27648 x U / 5 U = D x 5 / 27648
	5 V	27648	0x6C00	Nominal range	
	2,5	13824	0x3600		
	0 V	0	0x0000		
	-2,5 V	-13824	0xCA00		
	-5 V	-27648	0x9400		
	-5,88 V	-32511	0x8100	Underloading	
±5 V Siemens S5 format	5,88 V	19268	0x4B44	Overloading	D = 16384 x U / 5 U = D x 5 / 16384
	5 V	16384	0x4000	Nominal range	
	2,5	8192	0x2000		
	0 V	0	0x0000		
	-2,5 V	-8192	0xE000		
	-5 V	-16384	0xC000		
	-5,88 V	-19268	0xB4BC	Underloading	

In the case of undervoltage (power supply), the input value 0x7FFF is displayed in S7 format.
In S5 format, the 3 least significant bits remain the status they had before the undervoltage, so the input value is in the range from 0x7FF8 to 0x7FFF.

The following applies for all S7 ranges:
input value > overload range = 0x7FFF
input value < underload range = 0x8000
Additional status bits are set for S5

Digital measured value representation in Siemens S5 format

Data bit	7	6	5	4	3	2	1	0
Byte 0 (High Byte)	2^{12}	2^{11}	2^{10}	2^{9}	2^{8}	2^{7}	2^{6}	2^{5}
Byte 1 (low byte)	2^{4}	2^{3}	2^{2}	2^{1}	2^{0}	A	F	0

A: 0 = not active / 1 = active
F: 0 = no line break / 1 = line break
0: 0 = 0 to 4095 units / 1 = ±4096 units (overflow)
Representation in two's complement, 2^{12} = VZ in representation as amount and signs

6.48 Analogue input module UR20-8AI-I-16-DIAG

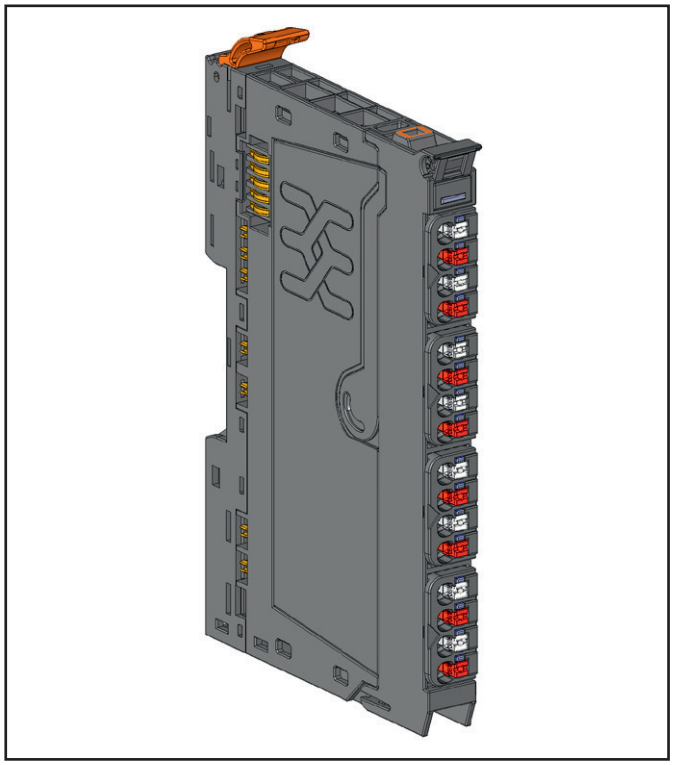

Analogue input module UR20-8AI-I-16-DIAG (Item No. 1529370000)

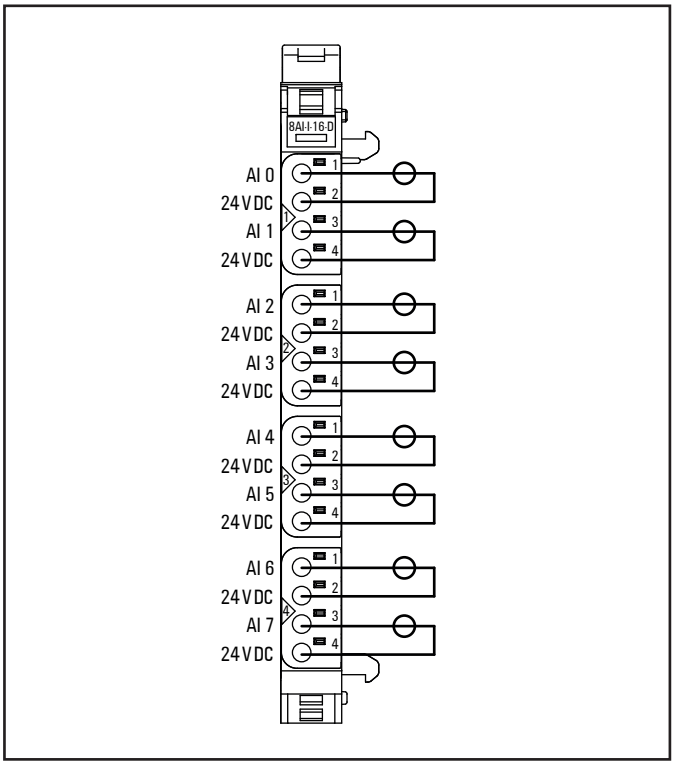

Connection diagram UR20-8AI-I-16-DIAG

The analogue input module UR20-8AI-I-16-DIAG can detect up to 8 analogue sensors with 0 ... 20 mA or 4 ... 20 mA. The resolution is 16 bit per channel. Sensors can be connected to each connector in a 2-wire connection. The measurement range is defined using parameterisation. A status LED is assigned to each channel. The module electronics supply the connected sensors with power from the input current path (I_{IN}).

The inputs are protected against voltage surges and overcurrent. Voltages that exceed ±30 V may cause the destruction of the module. The inputs are protected against overcurrent by a self-resetting fuse.

The module provides individual channel diagnosis with channel related error messages.

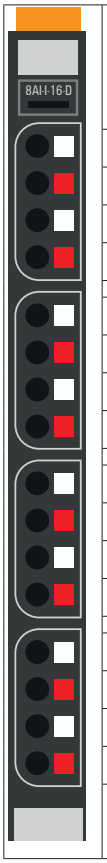

	Module status LED Green: Communication over the system bus Red: Error
1.1	Red: channel error
1.3	Red: channel error
2.1	Red: channel error
2.3	Red: channel error
3.1	Red: channel error
3.3	Red: channel error
4.1	Red: channel error
4.3	Red: channel error

LED indicators UR20-8AI-I-16-DIAG, troubleshooting see Chapter 12

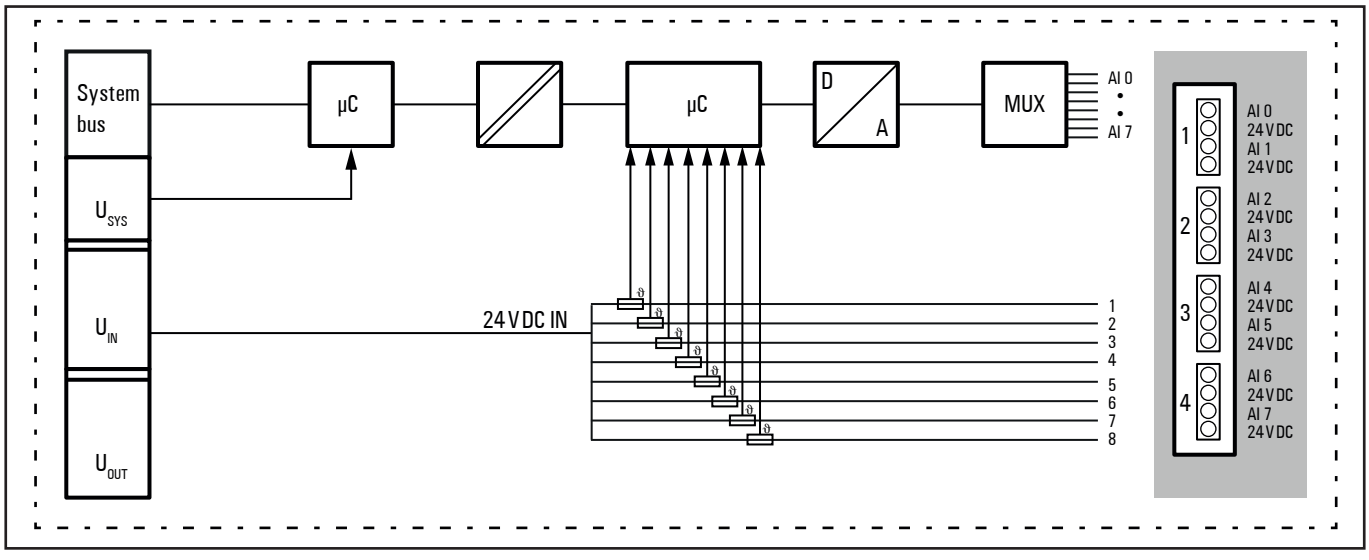

Block diagram UR20-8AI-I-16-DIAG

Technical data UR20-8AI-I-16-DIAG (Item No. 1529370000)

System data		
Data	Process, parameter and diagnostic data depend on the coupler used, see coupler description.	
Interface	u-remote system bus	
System bus transfer rate	48 Mbps / 192 Mbps	
Inputs		
Number	8	
Input values	Current input (0 ... 20 mA, 4 ... 20 mA)	
Resolution	16 bits	
Accuracy	max. 0.1 % FSR ±50 ppm/K max.	at 25 °C temperature coefficient
Sensor supply	max. 125 mA per channel	
Sensor connection	2-wire	
Conversion time	1 ms	
Internal resistance	approx. 45 Ω	
Reverse polarity protection	yes	
Short-circuit protection	yes	
Response time	< 0.1 s with short-circuit to +24 V	
Reset time	Temperature-dependent (< 30 s at 20 °C)	
Module diagnosis	yes	
Individual channel diagnosis	yes	
Supply		
Supply voltage	24 V DC +20 %/-15 % according to IEC 61131-2 24 V DC +30 %/-25 % according to DNV	
Current consumption from the system current path I_{SYS}	8 mA	
Current consumption from tne input current path I_{IN}	23 mA + load	
General data		
Weight (operational status)	90 g	
For additional general data, see Section 3.4		

Overview of the editable parameters UR20-8AI-I-16-DIAG

Channel	Description	Options[1)]	Default
	Frequency suppression	disabled (0) / 50 Hz (1) / 60 Hz (2) / Average over 16 values (3) / 2 Hz low pass (4)	disabled
0 ... 7	Channel diagnostics	disabled (0) / enabled (1)	disabled
0 ... 7	Diag short circuit 24 V	disabled (0) / enabled (1)	disabled
0 ... 7	Measurement range	0 to 20 mA (0) / 4 to 20 mA (1) / disabled (2)	disabled

1) Values in brackets for Modbus-TCP (firmware version 02.00.00 and higher), CANopen, EtherCAT and EtherNet/IP via module parameter class

Process data[1)] inputs UR20-8AI-I-16-DIAG

Byte	Format	Description
IB0	Word	AI0
IB1		
IB2	Word	AI1
IB3		
IB4	Word	AI2
IB5		
IB6	Word	AI3
IB7		
IB8	Word	AI4
IB9		
IB10	Word	AI5
IB11		
IB12	Word	AI6
IB13		
IB14	Word	AI7
IB15		

1) Internal process data mapping with data format “Standard”. Depending on the fieldbus specification and the data format of the communicating fieldbus components the bytes and/or words can be reversed during data transfer.

Diagnostic data UR20-8AI-I-16-DIAG

Name	Byte	Bit	Description	Default
Error indicator	0	0	Module error	
		1	Internal error	
		2	External error	
		3	Channel error	0
		4	Error	
		5	Power supply fault	0
		6	Reserved	0
		7	Parameter error	
Module types	1	0	Module Type	0x05
		1		
		2		
		3		
		4	Channel information available	1
		5	Reserved	0
		6	Reserved	0
		7	Reserved	0
Error byte 2	2	0 ... 7	Reserved	0
Error byte 3	3	0 ... 2	Reserved	0
		3	Internal diagnostic FIFO full	
		4	Power supply fault	
		5	Reserved	0
		6	Reserved	0
		7	Reserved	0
Channel type	4	0 ... 6	Channel type	0x74
		7	Reserved	0
Diagnostic bits per channel	5		Number of diagnostic bit per channel	8
Number of channels	6		Number of similar channels per module	8
Channel error	7	0	Error at channel 0	0
		1	Error at channel 1	0
		2	Error at channel 2	0
		3	Error at channel 3	0
		4	Error at channel 4	0
		5	Error at channel 5	0
		6	Error at channel 6	0
		7	Error at channel 7	0
	8 ... 10	8 ... 31	Reserved	0
Channel 0 error ... Channel 7 error	11 ... 18	0 ... 7	Parameter Error	0
			Overload	0
			Reserved	0
			External short-circuit	0
			Line break	0
			Reserved	0
			Lower limit exceeded	0
			Upper limit exceeded	0

Diagnostic data UR20-8AI-I-16-DIAG

Name	Byte	Bit	Description	Default
Channel 8 error ... Channel 31 error	19 ... 42	0 ... 7	Reserved	0
Time stamp	43 ... 46		time stamp [µs] (32bit)	

A diagnosis is indicated when a diagnosis limit value has been exceeded.

Diagnosis limit values

Measurement range	Lower limit	Upper limit
0 ... 20 mA	-	21 mA
4 ... 20 mA	3.6 mA	21 mA

Measurement range UR20-8AI-I-16-DIAG

Measurement range	Current (I)	Decimal (D)	Hexadecimal	Range	Conversion
0 ... 20 mA Siemens S7 format	23,52 mA	32511	0x7EFF	Overloading	D = 27648 x I / 20 I = D x 20 / 27648
	20 mA	27648	0x6C00	Nominal range	
	10 mA	13824	0x3600		
	0 mA	0	0x0000		
4 ... 20 mA Siemens S7 format	22,81 mA	32511	0x7EFF	Overloading	D = 27648 x (I – 4) / 16 I= D x 16 / 27648 + 4
	20 mA	27648	0x6C00	Nominal range	
	12 mA	13824	0x3600		
	4 mA	0	0x0000		
	1,19 mA	-4864	0xED00	Underloading	

The following applies for all ranges:
input value > overload range = 0x7FFF
input value < underload range = 0x8000

6.49 Analogue input module UR20-8AI-I-16-HD

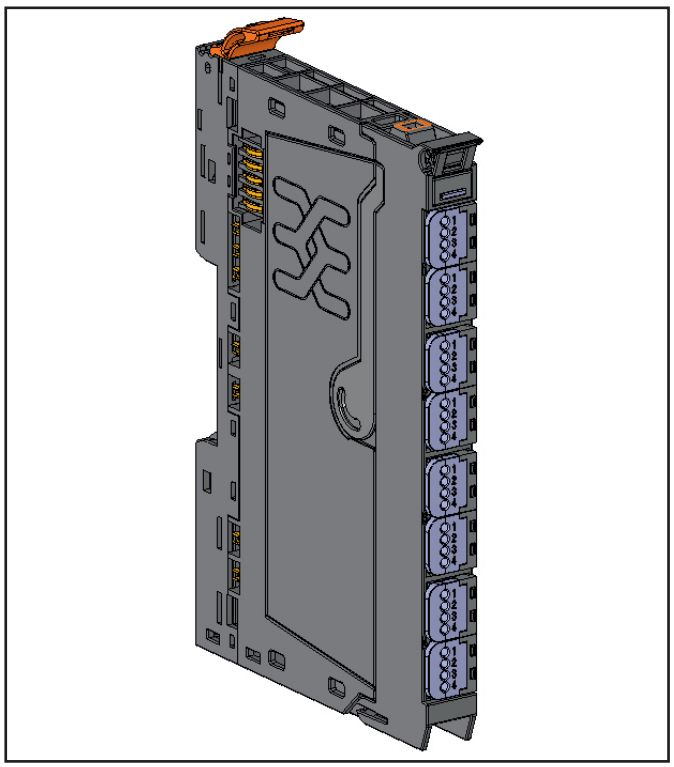

Analogue input module UR20-8AI-I-16-HD (Item No. 1315650000)

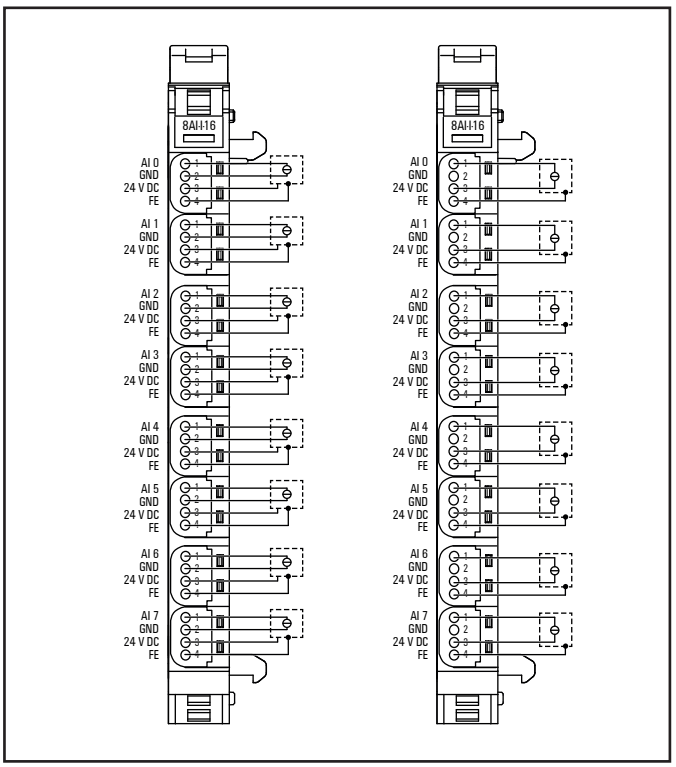

Connection diagram UR20-8AI-I-16-HD (left 3/4-wire sensor with signal wiring and sensor supply via module electronics, right: 2-wire sensor loop powered by module electronics)

The analogue input module UR20-8AI-I-16-HD can detect up to 8 analogue sensors with 0 ... 20 mA or 4 ... 20 mA. The resolution is 16 bit per channel. Sensors can be connected to each connector in a 2-wire, 3-wire or 3-wire connection + FE (IDC). The measurement range is defined using parameterisation. A status LED is assigned to each channel. The module electronics supply the connected sensors with power from the input current path (I_{IN}).

The inputs are protected against voltage surges and overcurrent. Voltages that exceed ±30 V may cause the destruction of the module. The inputs are protected against overcurrent by a self-resetting fuse.

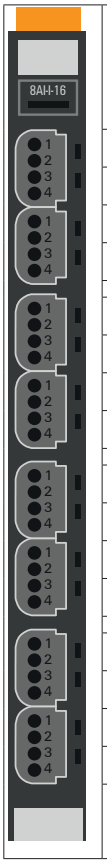

	Status LED module Green: Communication over the system bus Red: Error
1.1	Red: Channel error
2.1	Red: Channel error
3.1	Red: Channel error
4.1	Red: Channel error
5.1	Red: Channel error
6.1	Red: Channel error
7.1	Red: Channel error
8.1	Red: Channel error

LED indicators UR20-8AI-I-16-HD, troubleshooting see Chapter 12

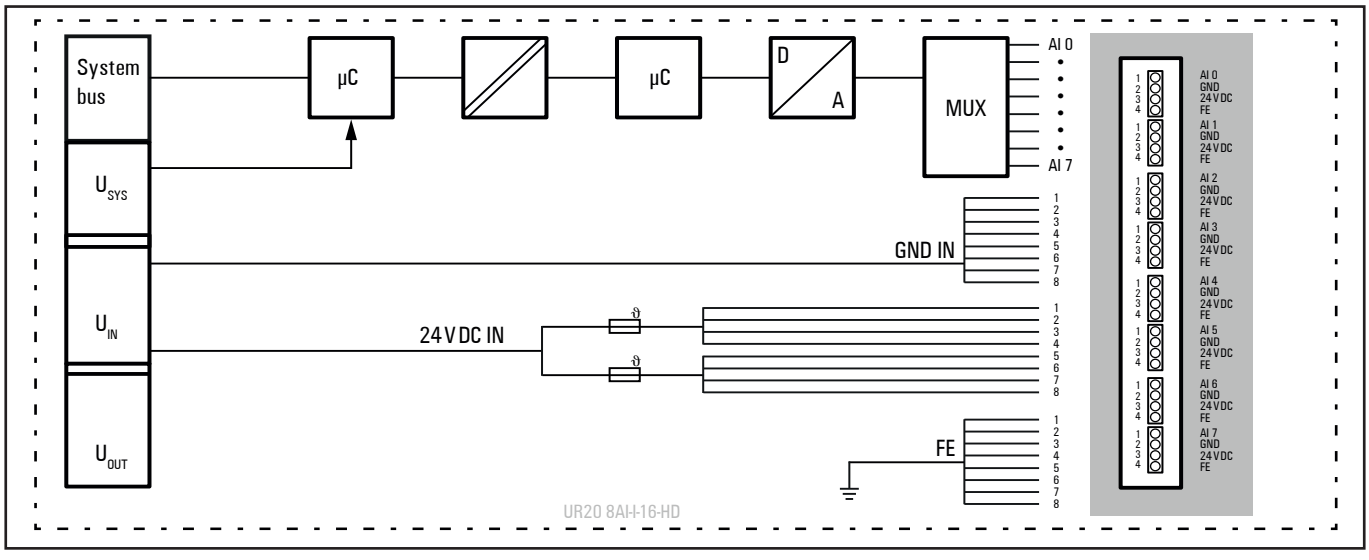

Block diagram UR20-8AI-I-16-HD

Technical data UR20-8AI-I-16-HD (Item No. 1315650000)

System data		
Data	Process, parameter and diagnostic data depend on the coupler used, see coupler description.	
Interface	u-remote system bus	
System bus transfer rate	48 Mbps	
Inputs		
Number	8	
Input values	Current input (0 ... 20 mA, 4 ... 20 mA)	
Resolution	16 bits	
Accuracy	max. 0.1 % FSR ±50 ppm/K max.	at 25 °C temperature coefficient
Sensor supply	max. 125 mA per channel; channel 0 ... 3 and 4 ... 7 respectively are fused in combination	
Sensor connection	2-wire, 3-wire, 3-wire + FE	
Conversion time	1 ms	
Internal resistance	approx. 45 Ω	
Reverse polarity protection	yes	
Short-circuit protection	yes	
Response time	< 0.1 s with short-circuit to +24 V	
Reset time	Temperature-dependent (< 30 s at 20 °C)	
Module diagnosis	yes	
Individual channel diagnosis	no	
Supply		
Supply voltage	24 V DC +20 %/-15 %	
Current consumption from the system current path I_{SYS}	8 mA	
Current consumption from the input current path I_{IN}	20 mA + load	
Connection data		
Type of connection	Insulation Displacement Connection (IDC)	
Line connection cross-section	Single-wired, fine-wired	0.14 ... 0.35 mm²
General data		
Weight (operational status)	90 g	
For additional general data, see Section 3.4		

Overview of the editable parameters UR20-8AI-I-16-HD

Channel	Description	Options[1)]	Default
	Frequency suppression	disabled (0) / 50 Hz (1) / 60 Hz (2) / Average over 16 values (3) / 2 Hz low pass (4)	disabled
0 ... 7	Data format	S5 Data format (0) / S7 Data format (1)	S7 Data format
0 ... 7	Measurement range	0 to 20 mA (0) / 4 to 20 mA (1) / disabled (2)	disabled

1) Values in brackets for Modbus-TCP (firmware version 02.00.00 and higher), CANopen, EtherCAT and EtherNet/IP via module parameter class

Diagnostic data UR20-8AI-I-16-HD

Name	Byte	Bit	Description	Default
Error indicator	0	0	Module error	
		1	Internal error	
		2	External error	
		3	Channel error	0
		4	Error	
		5	Reserved	0
		6	Reserved	0
		7	Parameter error	
Module types	1	0	Module Type	0x05
		1		
		2		
		3		
		4	Reserved	0
		5	Reserved	0
		6	Reserved	0
		7	Reserved	0
Error byte 2	2	0 ... 7	Reserved	0
Error byte 3	3	0 ... 2	Reserved	0
		3	Internal diagnostic FIFO full	0
		4	Power supply fault	0
		5	Reserved	0
		6	Reserved	0
		7	Reserved	0
Channel type	4	0 ... 6	Channel type	0x74
		7	Reserved	0
Diagnostic bits per channel	5		Number of diagnostic bit per channel	0
Number of channels	6		Number of similar channels per module	8
Channel error	7 ... 10	0 ... 31	Reserved	0
Channel 0 error to Channel 31 error	11 ... 42	0 ... 7	Reserved	0
Time stamp	43 ... 46		time stamp [µs] (32bit)	

Process data[1)] inputs UR20-8AI-I-16-HD

Byte	Format	Description
IB0	Word	AI0
IB1		
IB2	Word	AI1
IB3		
IB4	Word	AI2
IB5		
IB6	Word	AI3
IB7		
IB8	Word	AI4
IB9		
IB10	Word	AI5
IB11		
IB12	Word	AI6
IB13		
IB14	Word	AI7
IB15		

1) Internal process data mapping with data format “Standard”. Depending on the fieldbus specification and the data format of the communicating fieldbus components the bytes and/or words can be reversed during data transfer.

A diagnosis is indicated when a diagnosis limit value has been exceeded.

Diagnosis limit values

Measurement range	Lower limit	Upper limit
0 ... 20 mA	-	21 mA
4 ... 20 mA	3.6 mA	21 mA

Measurement range UR20-8AI-I-16-HD

Measurement range	Current (I)	Decimal (D)	Hexadecimal	Range	Conversion
0 ... 20 mA Siemens S7-Format	23,52 mA	32511	0x7EFF	Overloading	D = 27648 x I / 20 I = D x 20 / 27648
	20 mA	27648	0x6C00	Nominal range	
	10 mA	13824	0x3600		
	0 mA	0	0x0000		
0 ... 20 mA Siemens S5-Format	23,52 mA	19268	0x4B44	Overloading	D = 16384 x I / 20 I = D x 20 / 16384
	20 mA	16384	0x4000	Nominal range	
	10 mA	8192	0x2000		
	0 mA	0	0x0000		
4 ... 20 mA Siemens S7-Format	22,81 mA	32511	0x7EFF	Overloading	D = 27648 x (I - 4) / 16 I= D x 16 / 27648 + 4
	20 mA	27648	0x6C00	Nominal range	
	12 mA	13824	0x3600		
	4 mA	0	0x0000		
	1,19 mA	-4864	0xED00	Underloading	
4 ... 20 mA Siemens S5-Format	22,82 mA	19268	0x4B44	Overloading	D = 16384 x (I - 4) / 16 I = D x 16 / 16384 + 4
	20 mA	16384	0x4000	Nominal range	
	12 mA	8192	0x2000		
	4 mA	0	0x0000		
	0,8 mA	-3277	0xF333	Underloading	

The following applies for all S7 ranges:
input value > overload range = 0x7FFF
input value < underload range = 0x8000

Additional status bits are set for S5.

Digital measured value representation in Siemens S5 format

Data bit	7	6	5	4	3	2	1	0
Byte 0 (High Byte)	2^{12}	2^{11}	2^{10}	2^{9}	2^{8}	2^{7}	2^{6}	2^{5}
Byte 1 (low byte)	2^{4}	2^{3}	2^{2}	2^{1}	2^{0}	A	F	O

A: 0 = not active
1 = active
F: 0 = no line break
1 = line break
O: 0 = 0 to 4095 units
1 = ±4096 units (overflow)

Representation in two's complement
2^{12} = VZ in representation as amount and signs

6.50 Analogue input module UR20-8AI-I-16-DIAG-HD

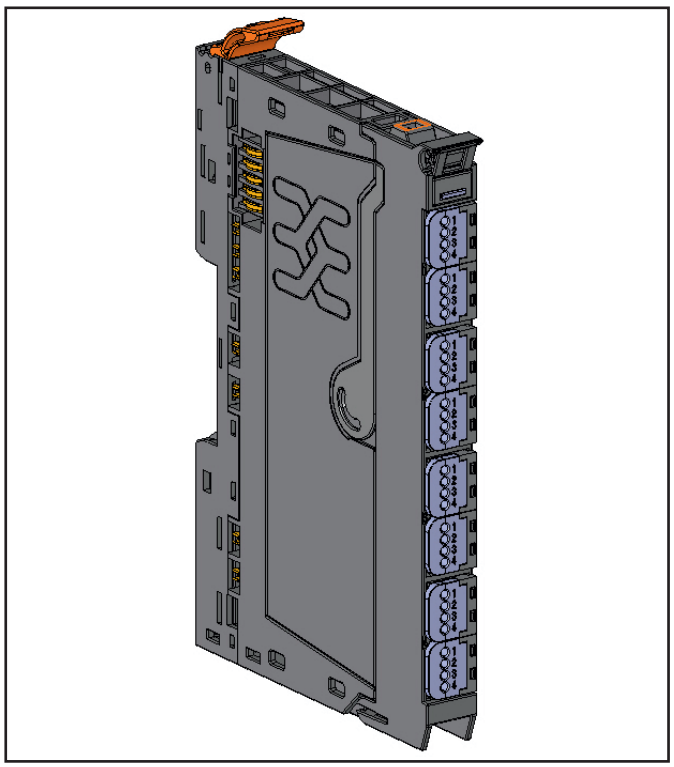

Analogue input module UR20-8AI-I-16-DIAG-HD (Item No. 1315720000)

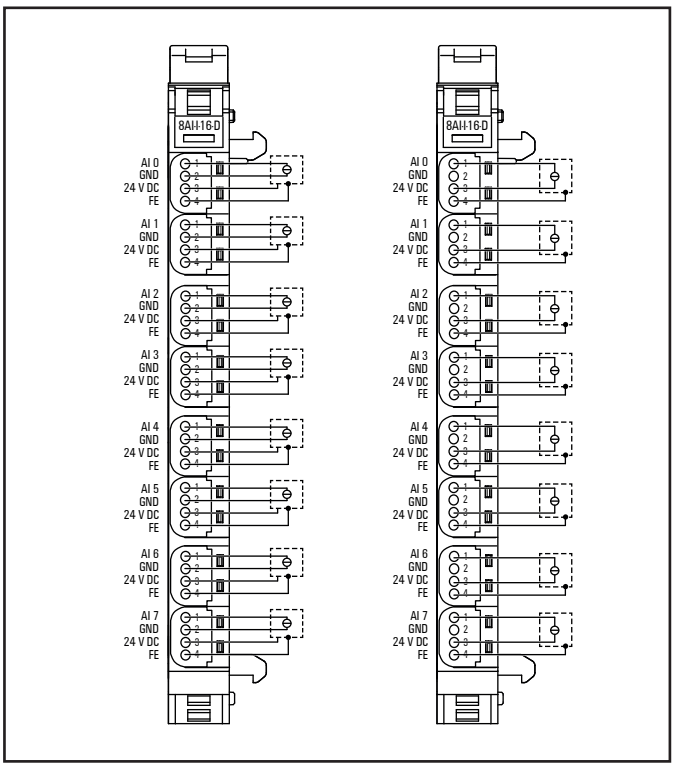

Connection diagram UR20-8AI-I-16-DIAG-HD (left 3/4-wire sensor with signal wiring and sensor supply via module electronics, right: 2-wire sensor loop powered by module electronics)

The analogue input module UR20-8AI-I-16-DIAG-HD can detect up to 8 analogue sensors with 0 ... 20 mA or 4 ... 20 mA. The resolution is 16 bit per channel. Sensors can be connected to each connector in a 2-wire, 3-wire or 3-wire connection + FE (IDC). The measurement range is defined using parameterisation. A status LED is assigned to each channel. The module electronics supply the connected sensors with power from the input current path (I_{IN}).

The inputs are protected against voltage surges and overcurrent. Voltages that exceed ±30 V may cause the destruction of the module. The inputs are protected against overcurrent by a self-resetting fuse.

The module provides individual channel diagnosis with channel related error messages.

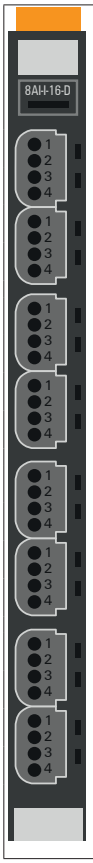

	Module status LED Green: Communication over the system bus Red: Error
1.1	Red: channel error
2.1	Red: channel error
3.1	Red: channel error
4.1	Red: channel error
5.1	Red: channel error
6.1	Red: channel error
7.1	Red: channel error
8.1	Red: channel error

LED indicators UR20-8AI-I-16-DIAG-HD, troubleshooting see Chapter 12

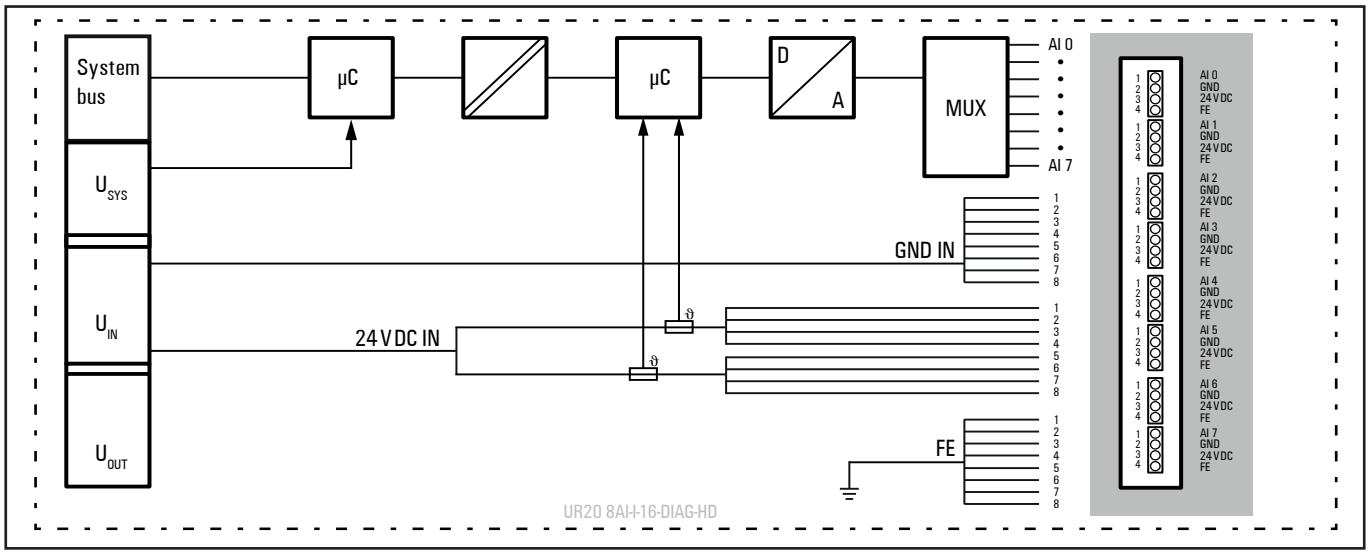

Block diagram UR20-8AI-I-16-DIAG-HD

Technical data UR20-8AI-I-16-DIAG-HD (Item No. 1315720000)

System data		
Data	Process, parameter and diagnostic data depend on the coupler used, see coupler description.	
Interface	u-remote system bus	
System bus transfer rate	48 Mbps	
Inputs		
Number	8	
Input values	Current input (0 ... 20 mA, 4 ... 20 mA)	
Resolution	16 bits	
Accuracy	max. 0.1 % FSR ±50 ppm/K max.	at 25 °C temperature coefficient
Sensor supply	max. 125 mA per channel; channel 0 ... 3 and 4 ... 7 respectively are fused in combination	
Sensor connection	2-wire, 3-wire, 3-wire + FE	
Conversion time	1 ms	
Internal resistance	approx. 45 Ω	
Reverse polarity protection	yes	
Short-circuit protection	yes	
Response time	< 0.1 s with short-circuit to +24 V	
Reset time	Temperature-dependent (< 30 s at 20 °C)	
Module diagnosis	yes	
Individual channel diagnosis	yes	
Supply		
Supply voltage	24 V DC +20 %/-15 %	
Current consumption from the system current path I_{SYS}	8 mA	
Current consumption from tne input current path I_{IN}	20 mA + load	
Connection data		
Type of connection	Insulation Displacement Connection (IDC)	
Line connection cross-section	Single-wired, fine-wired	0.14 ... 0.35 mm²
General data		
Weight (operational status)	90 g	
For additional general data, see Section 3.4		

Overview of the editable parameters UR20-8AI-I-16-DIAG-HD

Channel	Description	Options[1)]	Default
	Frequency suppression	disabled (0) / 50 Hz (1) / 60 Hz (2) / Average over 16 values (3) / 2 Hz low pass (4)	disabled
0 ... 7	Channel diagnostics	disabled (0) / enabled (1)	disabled
0 ... 7	Diag short circuit 24 V	disabled (0) / enabled (1)	disabled
0 ... 7	Data format	S5 Data format (0) / S7 Data format (1)	S7 Data format
0 ... 7	Measurement range	0 to 20 mA (0) / 4 to 20 mA (1) / disabled (2)	disabled

1) Values in brackets for Modbus-TCP (firmware version 02.00.00 and higher), CANopen, EtherCAT and EtherNet/IP via module parameter class

Process data[1)] inputs UR20-8AI-I-16-DIAG-HD

Byte	Format	Description
IB0	Word	AI0
IB1		
IB2	Word	AI1
IB3		
IB4	Word	AI2
IB5		
IB6	Word	AI3
IB7		
IB8	Word	AI4
IB9		
IB10	Word	AI5
IB11		
IB12	Word	AI6
IB13		
IB14	Word	AI7
IB15		

1) Internal process data mapping with data format “Standard”. Depending on the fieldbus specification and the data format of the communicating fieldbus components the bytes and/or words can be reversed during data transfer.

Diagnostic data UR20-8AI-I-16-DIAG-HD

Name	Byte	Bit	Description	Default
Error indicator	0	0	Module error	
		1	Internal error	
		2	External error	
		3	Channel error	0
		4	Error	
		5	Power supply fault	0
		6	Reserved	0
		7	Parameter error	
Module types	1	0	Module Type	0x05
		1		
		2		
		3		
		4	Channel information available	1
		5	Reserved	0
		6	Reserved	0
		7	Reserved	0
Error byte 2	2	0 ... 7	Reserved	0
Error byte 3	3	0 ... 2	Reserved	0
		3	Internal diagnostic FIFO full	
		4	Power supply fault	
		5	Reserved	0
		6	Reserved	0
		7	Reserved	0
Channel type	4	0 ... 6	Channel type	0x74
		7	Reserved	0
Diagnostic bits per channel	5		Number of diagnostic bit per channel	8
Number of channels	6		Number of similar channels per module	8
Channel error	7	0	Error at channel 0	0
		1	Error at channel 1	0
		2	Error at channel 2	0
		3	Error at channel 3	0
		4	Error at channel 4	0
		5	Error at channel 5	0
		6	Error at channel 6	0
		7	Error at channel 7	0
	8 ... 10	8 ... 31	Reserved	0
Channel 0 error ... Channel 7 error	11 ... 18	0 ... 7	Parameter Error	0
			Overload	0
			Reserved	0
			External short-circuit	0
			Line break	0
			Reserved	0
			Lower limit exceeded	0
			Upper limit exceeded	0
Channel 8 error ... Channel 31 error	19 ... 42	0 ... 7	Reserved	0

Diagnostic data UR20-8AI-I-16-DIAG-HD

Name	Byte	Bit	Description	Default
Time stamp	43 ... 46		time stamp [µs] (32bit)	

A diagnosis is indicated when a diagnosis limit value has been exceeded.

Diagnosis limit values

Measurement range	Lower limit	Upper limit
0 ... 20 mA	-	21 mA
4 ... 20 mA	3.6 mA	21 mA

Measurement range UR20-8AI-I-16-DIAG-HD

Measurement range	Current (I)	Decimal (D)	Hexadecimal	Range	Conversion
0 ... 20 mA Siemens S7 format	23,52 mA	32511	0x7EFF	Overloading	D = 27648 x I / 20 I = D x 20 / 27648
	20 mA	27648	0x6C00	Nominal range	
	10 mA	13824	0x3600		
	0 mA	0	0x0000		
0 ... 20 mA Siemens S5 format	23,52 mA	19268	0x4B44	Overloading	D = 16384 x I / 20 I = D x 20 / 16384
	20 mA	16384	0x4000	Nominal range	
	10 mA	8192	0x2000		
	0 mA	0	0x0000		
4 ... 20 mA Siemens S7 format	22,81 mA	32511	0x7EFF	Overloading	D = 27648 x (I - 4) / 16 I= D x 16 / 27648 + 4
	20 mA	27648	0x6C00	Nominal range	
	12 mA	13824	0x3600		
	4 mA	0	0x0000		
	1,19 mA	-4864	0xED00	Underloading	
4 ... 20 mA Siemens S5 format	22,82 mA	19268	0x4B44	Overloading	D = 16384 x (I - 4) / 16 I = D x 16 / 16384 + 4
	20 mA	16384	0x4000	Nominal range	
	12 mA	8192	0x2000		
	4 mA	0	0x0000		
	0,8 mA	-3277	0xF333	Underloading	

The following applies for all S7 ranges:
input value > overload range = 0x7FFF
input value < underload range = 0x8000

Additional status bits are set for S5.

Digital measured value representation in Siemens S5 format

Data bit	7	6	5	4	3	2	1	0
Byte 0 (High Byte)	2^{12}	2^{11}	2^{10}	2^{9}	2^{8}	2^{7}	2^{6}	2^{5}
Byte 1 (low byte)	2^{4}	2^{3}	2^{2}	2^{1}	2^{0}	A	F	O

A: 0 = not active
1 = active
F: 0 = no line break
1 = line break
O: 0 = 0 to 4095 units
1 = ±4096 units (overflow)

Representation in two's complement
2^{12} = VZ in representation as amount and signs

6.51 Analogue input module UR20-8AI-I-PLC-INT

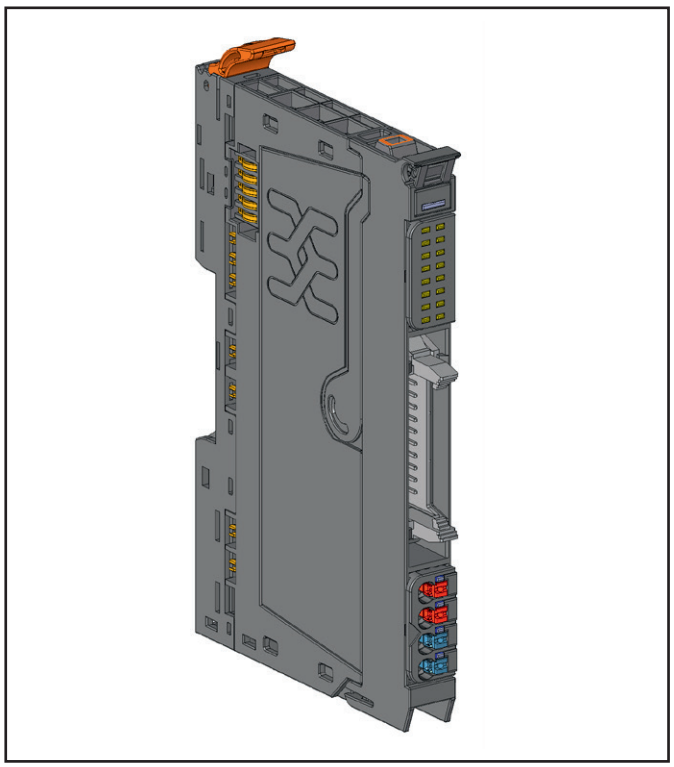

Analogue input module UR20-8AI-I-PLC-INT (Item No. 1315670000)

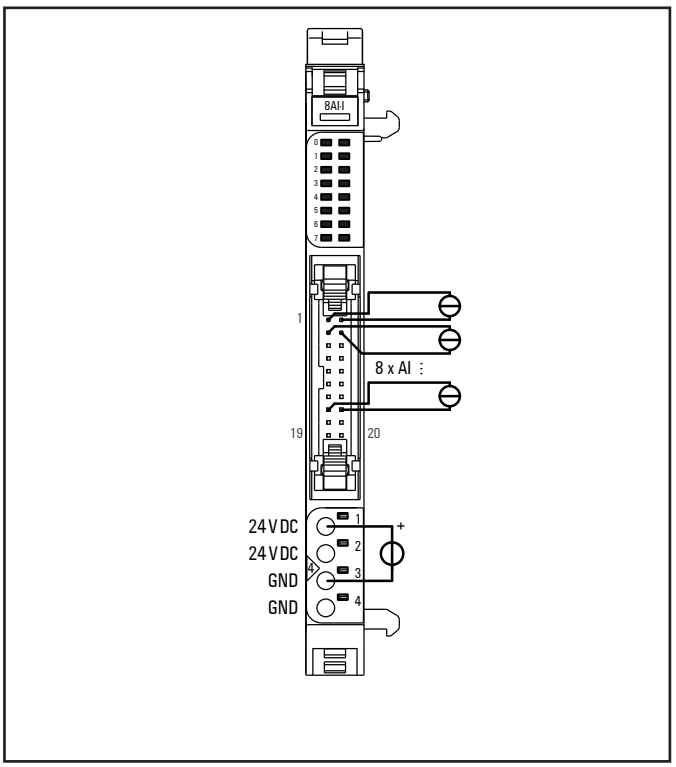

Connection diagram UR20-8AI-I-PLC-INT

The analogue input module UR20-8AI-I-PLC-INT can detect up to 8 analogue sensors with 0 ... 20 mA or 4 ... 20 mA. The resolution is 16 bit per channel. The sensors are connected via a standard PLC connection (20-pole). The measurement range is defined using parameterisation. A status LED is assigned to each channel in a separate block. The module electronics can supply the sensors with power from the 4-pole feed-in plug (connector 4) via the PLC connection. Vice versa the module can be supplied via the PLC connection.

The inputs are protected against voltage surges and overcurrent. Voltages that exceed ±30 V may cause the destruction of the module. The inputs are protected against overcurrent by a self-resetting fuse.

For the PLC connection, the following applies: a maximum current of 2 A (with a max. of 1 A per contact) can be taken from the +24 V connections or fed through the 0 V connections.

The power supply of the peripherals connected has to be calculated for each individual installation situation. When using a flat ribbon cable, please regard its higher internal resistance!

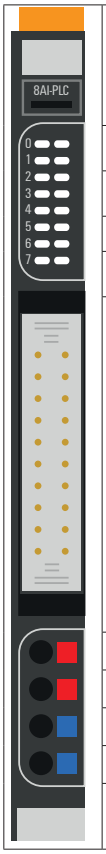

	Module status LED Green: Communication over the system bus Red: Error
0	Red: channel error
1	Red: channel error
...	...
7	Red: channel error
4.1	Green: Supply voltage feed-in plug > 18 V DC
4.2	Red: Error on the supply voltage of the feed-in plug
4.4	Red: Fuse for the sensor supply has been triggered

LED indicators UR20-8AI-I-PLC-INT, troubleshooting see Chapter 12

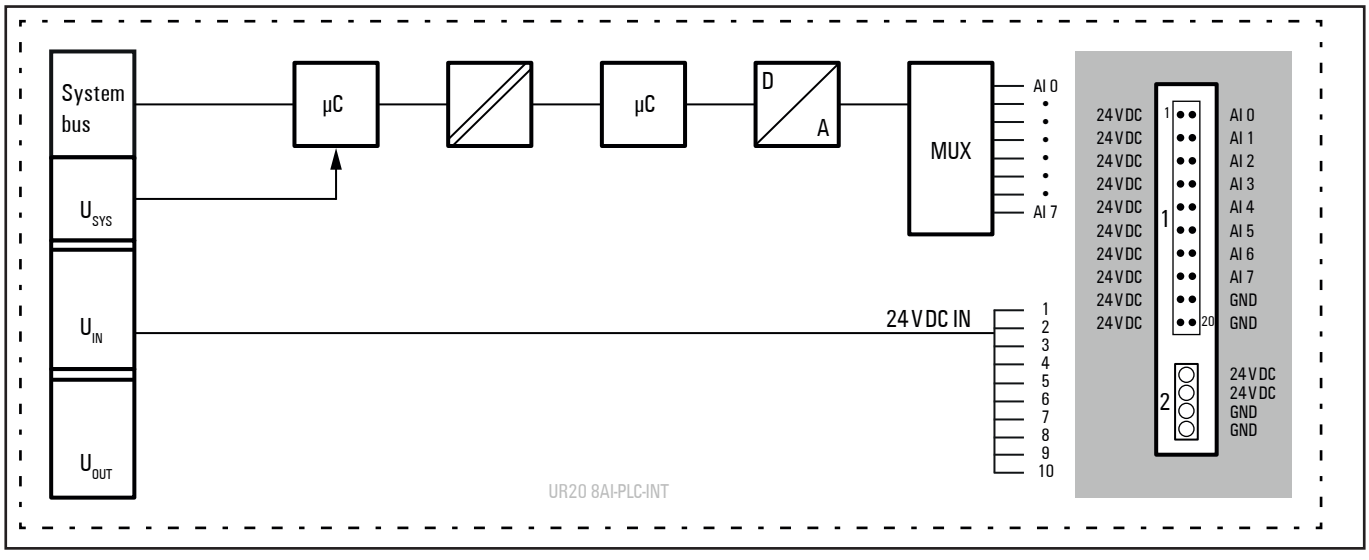

Block diagram UR20-8AI-I-PLC-INT

Technical data UR20-8AI-I-PLC-INT (Item No. 1315670000)

System data		
Data	Process, parameter and diagnostic data depend on the coupler used, see coupler description.	
Interface	u-remote system bus	
System bus transfer rate	48 Mbps	
Inputs		
Number	8	
Input values	Current input	
Resolution	16 bits	
Accuracy	max. 0.1 % FSR ±50 ppm/K max.	at 25 °C temperature coefficient
Sensor supply	External	
Sensor connection	PLC interface unit	
Conversion time	1 ms	
Internal resistance	approx. 50 Ω	
Reverse polarity protection	yes	
Short-circuit protection	yes	
Response time	< 0.1 s with short-circuit to +24 V	
Reset time	Temperature-dependent; < 30 s at 20 °C	
Module diagnosis	yes	
Individual channel diagnosis	no	
Supply		
Supply voltage	24 V DC +20 %/-15 %	
Current consumption from system current path I_{sys}	8 mA	
Current consumption (via supply connector at the module)	< 20 mA	
Connection data		
Type of connection	"PUSH IN"	
Line connection cross-section	Single-wired	0.14 … 1.5 mm² (AWG 16 – 26)
	Fine-wired	0.14 … 1.5 mm² (AWG 16 – 26)
I/O connector	20-pole PLC connection	
General data		
Weight (operational status)	73 g	
For additional general data, see Section 3.4		

Overview of the editable parameters UR20-8AI-I-PLC-INT

Channel	Description	Options[1)]	Default
	Frequency suppression	disabled (0) / 60 Hz (1) / 50 Hz (2) / Average over 16 values (3) / 2 Hz low pass (4)	disabled
0 ... 7	Data format	S5 Data format (0) / S7 Data format (1)	S7 Data format
0 ... 7	Measurement range	0 to 20 mA (0) / 4 to 20 mA (1) / disabled (2)	disabled

1) Values in brackets for Modbus-TCP (firmware version 02.00.00 and higher), CANopen, EtherCAT and EtherNet/IP via module parameter class

Diagnostic data UR20-8AI-I-PLC-INT

Name	Bytes	Bit	Description	Default
Error indicator	0	0	Module error	
		1	Internal error	
		2	External error	
		3	Channel error	0
		4	Error	
		5	Reserved	0
		6	Reserved	0
		7	Parameter error	
Module types	1	0	Module Type	0x05
		1		
		2		
		3		
		4	Reserved	0
		5	Reserved	0
		6	Reserved	0
		7	Reserved	0
Error byte 2	2	0 ... 7	Reserved	0
Error byte 3	3	0 ... 2	Reserved	0
		3	Internal diagnostic FIFO full	
		4	Power supply fault	
		5	Reserved	0
		6	Reserved	0
		7	Reserved	0
Channel type	4	0 ... 6	Channel type	0x74
		7	Reserved	0
Diagnostic bits per channel	5		Number of diagnostic bit per channel	0
Number of channels	6		Number of similar channels per module	8
Channel error	7 ... 10	0 ... 31	Reserved	0
Channel 0 error to Channel 31 error	11 ... 42	0 ... 7	Reserved	0
Time stamp	43-46		time stamp [µs] (32bit)	

Process data[1)] inputs UR20-8AI-I-PLC-INT

Byte	Format	Description
IB0	Word	AI0
IB1		
IB2	Word	AI1
IB3		
IB4	Word	AI2
IB5		
IB6	Word	AI3
IB7		
IB8	Word	AI4
IB9		
IB10	Word	AI5
IB11		
IB12	Word	AI6
IB13		
IB14	Word	AI7
IB15		

1) Internal process data mapping with data format “Standard”. Depending on the fieldbus specification and the data format of the communicating fieldbus components the bytes and/or words can be reversed during data transfer.

A diagnosis is indicated when a diagnosis limit value has been exceeded.

Diagnosis limit values

Measurement range	Lower limit	Upper limit
0 ... 20 mA	-	21 mA
4 ... 20 mA	3.6 mA	21 mA

Measurement range UR20-8AI-I-PLC-INT

Measurement range	Current (I)	Decimal (D)	Hexadecimal	Range	Conversion
0 – 20 mA Siemens S7 format	23.52 mA	32511	0x7EFF	Overloading	D = 27648 x I / 20 I = D x 20 / 27648
	20 mA	27648	0x6C00	Nominal range	
	10 mA	13824	0x3600		
	0 mA	0	0x0000		
0 – 20 mA Siemens S5 format	23.52 mA	19268	0x4B44	Overloading	D = 16384 x I / 20 I = D x 20 / 16384
	20 mA	16384	0x4000	Nominal range	
	10 mA	8192	0x2000		
	0 mA	0	0x0000		
4 – 20 mA Siemens S7 format	22.81 mA	32511	0x7EFF	Overloading	D = 27648 x (I – 4) / 16 I= D x 16 / 27648 + 4
	20 mA	27648	0x6C00	Nominal range	
	12 mA	13824	0x3600		
	4 mA	0	0x0000		
	1.19 mA	-4864	0xED00	Underloading	
4 – 20 mA Siemens S5 format	22.82 mA	19268	0x4B44	Overloading	D = 27648 x (I – 4) / 16 I = D x 16 / 16384 + 4
	20 mA	16384	0x4000	Nominal range	
	12 mA	8192	0x2000		
	4 mA	0	0x0000		
	0.8 mA	-3277	0xF333	Underloading	

The following applies for all S7 ranges:
input value > overload range = 0x7FFF
input value < underload range = 0x8000

Additional status bits are set for S5.

Digital measured value representation in Siemens S5 format

Data bit	7	6	5	4	3	2	1	0
Byte 0 (High Byte)	2^{12}	2^{11}	2^{10}	2^{9}	2^{8}	2^{7}	2^{6}	2^{5}
Byte 1 (low byte)	2^{4}	2^{3}	2^{2}	2^{1}	2^{0}	A	F	O

A: 0 = not active
1 = active
F: 0 = no line break
1 = line break
O: 0 = 0 to 4095 units
1 = ±4096 units (overflow)

Representation in two's complement
2^{12} = VZ in representation as amount and signs

6.52 Analogue input module UR20-4AI-RTD-DIAG

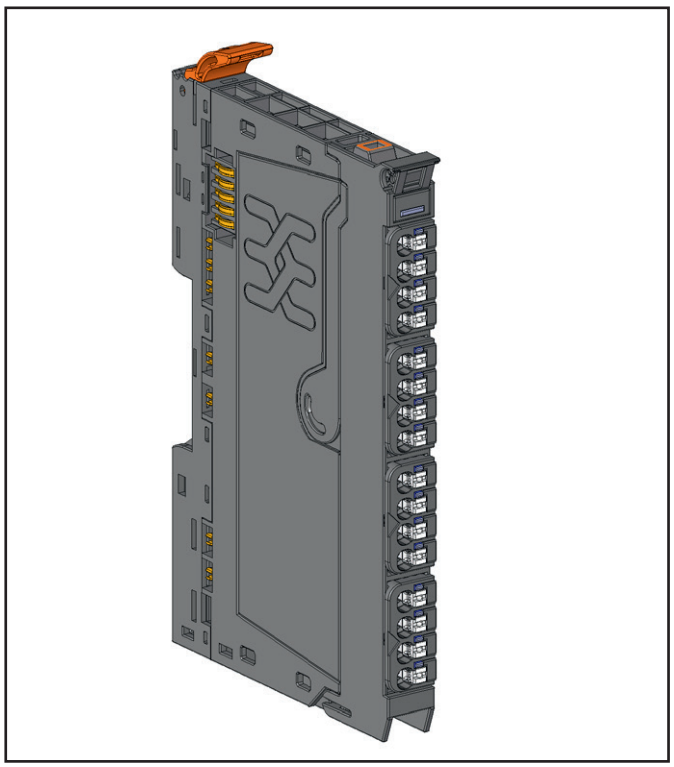

Analogue input module UR20-4AI-RTD-DIAG (Item No. 1315700000)

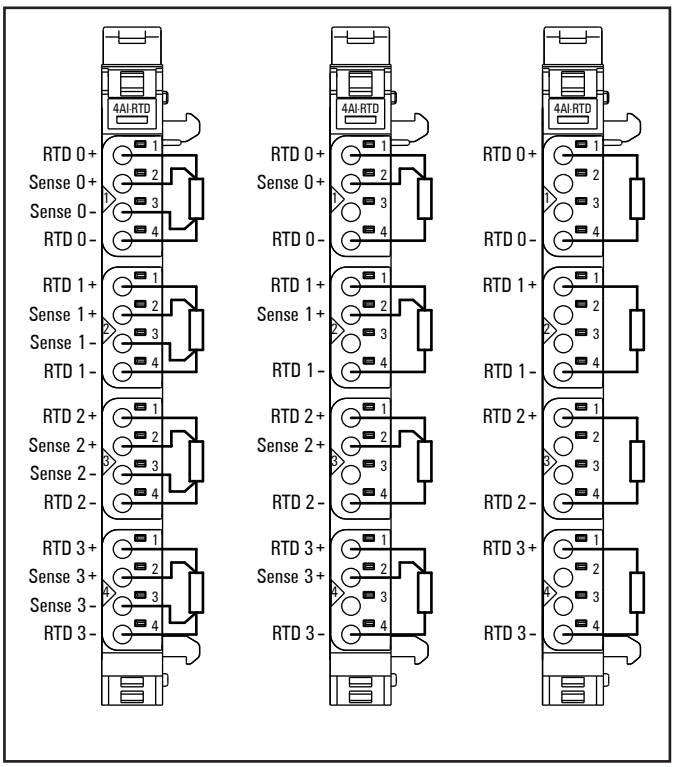

Connection diagram UR20-4AI-RTD-DIAG

The analogue input module UR20-4AI-RTD-DIAG can detect up to 4 analogue resistance thermometers. The resolution is 16 bit per channel. A sensor can be connected to each connector in a 2-wire, 3-wire or 4-wire connection. Mixed operation using different sensors as well as different connection methods is possible. Sensor type and temperature range are set using parameterisation. A status LED is assigned to each channel.

The inputs are protected against voltage surges and overcurrent. Voltages that exceed ±30 V may cause the destruction of the module.

The module provides individual channel diagnosis with channel related error messages.

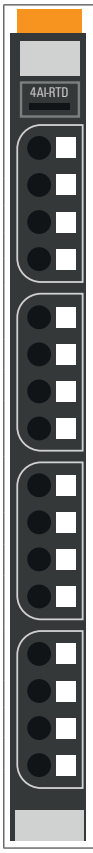

	Module status LED Green: Communication over the system bus Red: Error
1.1	Red: Signal at input 0 outside the permissible range, line break or short-circuit
2.1	Red: Signal at input 1 outside the permissible range, line break or short-circuit
3.1	Red: Signal at input 2 outside the permissible range, line break or short-circuit
4.1	Red: Signal at input 3 outside the permissible range, line break or short-circuit

LED indicators UR20-4AI-RTD-DIAG, troubleshooting see Chapter 12

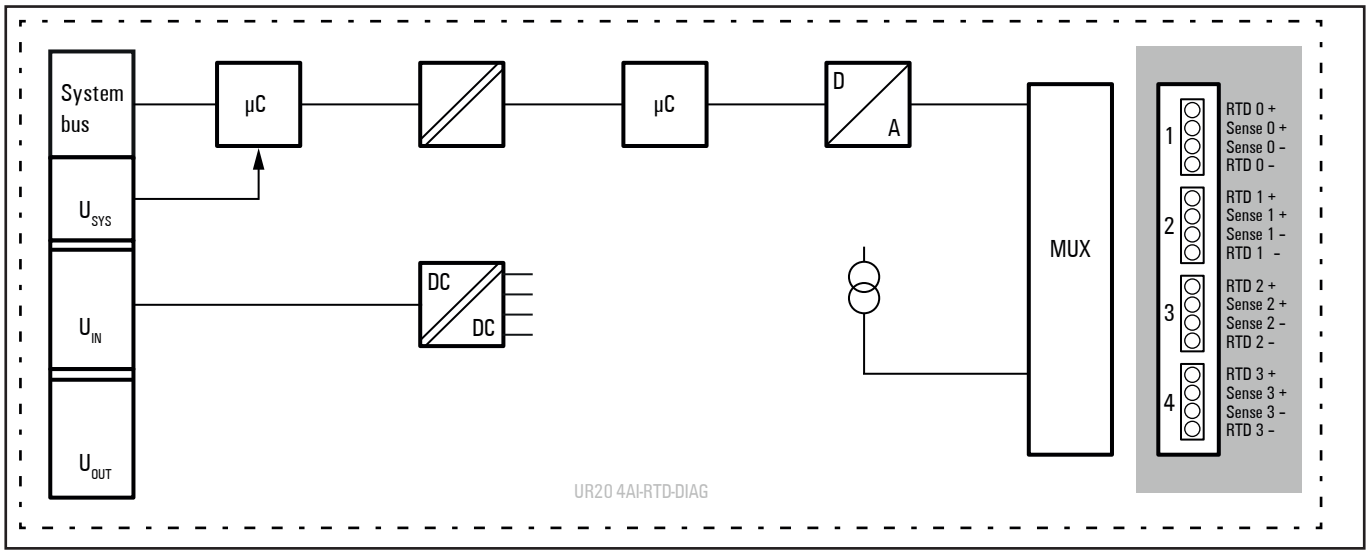

Block diagram UR20-4AI-RTD-DIAG

Technical data UR20-4AI-RTD-DIAG (Item No. 1315700000)

System data		
Data	Process, parameter and diagnostic data depend on the coupler used, see coupler description.	
Interface	u-remote system bus	
System bus transfer rate	48 Mbps	
Potential isolation	Channel/system bus	yes
	Channel/channel	no
Inputs		
Number	4	
Sensor types	Pt100, Pt200, Pt500, Pt1000, Ni100, Ni120, Ni 200, Ni500, Ni1000, Cu10, 40 Ω, 80 Ω, 150 Ω, 300 Ω, 500 Ω, 1 kΩ, 2 kΩ, 4 kΩ	
Resolution	16 bits	
Accuracy[1)]	max. 0.2 % FSR / 0.3 % FSR for Ni sensors / 0.6 % FSR for Cu10	
Sensor connection	2-wire, 3-wire, 4-wire	
Sensor current	depending on the sensor type 0,75 mA (Pt100, Ni100, Ni120, Cu10, 40 Ω, 80 Ω, 150 Ω, 300 Ω) or 0,25 mA (Pt200, Pt500, Pt1000, Ni200, Ni500, Ni1000, 500 Ω, 1 kΩ, 2 kΩ, 4 kΩ)	
Max. wire resistance / measurement range	2.5 Ω / 40 Ω, 5 Ω / 80 Ω, 10 Ω / 150 Ω and Cu10, 25 Ω in all other measuring ranges	
Temperature coefficient	±50 ppm/K max.	
Temperature range	-200 ... +850 °C	
Conversion time	36 to 240 ms, adjustable	
Common mode input voltage range	Channel to channel: max. ±2 V	
	Channel to voltage supply: max. ±50 V	
Reverse polarity protection	yes	
Module diagnosis	yes	
Individual channel diagnosis	yes	
Supply		
Supply voltage	24 V DC +20 %/-15 %	
Current consumption from system current path I_{SYS}	8 mA	
Current consumption from input current path I_{IN}	< 20 mA	
General data		
Weight (operational status)	91 g	
For additional general data, see Section 3.4		

1) The accuracy is guaranteed for conversion times ≥ 80 ms.

Overview of the editable parameters UR20-4AI-RTD-DIAG

Channel	Description	Options[1)]	Default
	Temperature unit	Degree Celsius (0) / Degree Fahrenheit (1) / Kelvin (2)	Degree Celsius
0 ... 3	Measurement range	PT100 -200 ... 850 Degree Celsius (0) / PT200 -200 ... 850 Degree Celsius (1) / PT500 -200 ... 850 Degree Celsius (2) / PT1000 -200 ... 850 Degree Celsius (3) / NI100 -60 ... 250 Degree Celsius (4) / NI120 -80 ... 260 Degree Celsius (5) / NI200 -60 ... 250 Degree Celsius (6) / NI500 -60 ... 250 Degree Celsius (7) / NI1000 -60 ... 250 Degree (8) / Cu10 -100 ... 260 Degree Celsius (9) / Resistance 40 Ω (10) / Resistance 80 Ω (11) / Resistance 150 Ω (12) / Resistance 300 Ω (13) / Resistance 500 Ω (14) / Resistance 1000 Ω (15) / Resistance 2000 Ω (16) / Resistance 4000 Ω (17) / disabled (18)	disabled
0 ... 3	Connection type	2-wire (0) / 3-wire (1) / 4-wire (2)	2-wire
0 ... 3	Conversion time	240 ms (0) / 130 ms (1) / 80 ms (2) / 55 ms (3) / 43 ms (4) / 36 ms (5)	80 ms
0 ... 3	Channel diagnostics	disabled (0) / enabled (1)	disabled
0 ... 3	Limit value monitoring	disabled (0) / enabled (1)	disabled
0 ... 3	High limit value	-32768 ... 32767	32767
0 ... 3	Low limit value	-32768 ... 32767	-32768

1) Values in brackets for Modbus-TCP (firmware version 02.00.00 and higher), CANopen, EtherCAT and EtherNet/IP via module parameter class

Diagnostic data UR20-4AI-RTD-DIAG

Name	Bytes	Bit	Description	Default
Error indicator	0	0	Module error	
		1	Internal error	
		2	External error	
		3	Channel error	
		4	Error	
		5	Power supply fault	
		6	Reserved	0
		7	Parameter error	
Module type	1	0	Module type	0x05
		1		
		2		
		3		
		4	Channel information available	1
		5	Reserved	0
		6	Reserved	0
		7	Reserved	0
Error byte 2	2	0 - 7	Reserved	0
Error byte 3	3	0 - 2	Reserved	0
		3	Internal diagnostic FIFO full	
		4	Power supply fault	
		5	Reserved	0
		6	Process alarm lost	
		7	Reserved	0
Channel type	4	0 - 6	Channel type	0x71
		7	Reserved	0
Diagnostic bits per channel	5		Number of diagnostic bit per channel	8
Number of channels	6		Number of similar channels per module	4
Channel error	7	0	Error at channel 0	
		1	Error at channel 1	
		2	Error at channel 2	
		3	Error at channel 3	
		4 - 7	Reserved	0
Channel error	8	8 - 15	Reserved	0
Channel error	9	16 - 23	Reserved	0
Channel error	10	24 - 31	Reserved	0
Channel 0 error	11	0	Parameter error	
		1	Reserved	0
		2	Reserved	0
		3	Reserved	0
		4	Line break	
		5	Process alarm lost	
		6	Lower limit exceeded	
		7	Upper limit exceeded	

Diagnostic data UR20-4AI-RTD-DIAG

Name	Bytes	Bit	Description	Default
Channel 1 error	12	0	Parameter error	
		1	Reserved	0
		2	Reserved	0
		3	Reserved	0
		4	Line break	
		5	Process alarm lost	
		6	Lower limit exceeded	
		7	Upper limit exceeded	
Channel 2 error	13	0	Parameter error	
		1	Reserved	0
		2	Reserved	0
		3	Reserved	0
		4	Line break	
		5	Process alarm lost	
		6	Lower limit exceeded	
		7	Upper limit exceeded	
Channel 3 error	14	0	Parameter error	
		1	Reserved	0
		2	Reserved	0
		3	Reserved	0
		4	Line break	
		5	Process alarm lost	
		6	Lower limit exceeded	
		7	Upper limit exceeded	
Channel 4 error to Channel 31 error	15 - 42	0 - 7	Reserved	0
Time stamp	43 - 46		Time stamp [µs] (32 bit)	

Process data[1] inputs UR20-4AI-RTD-DIAG

Byte	Format	Description
IB0	Word	RTD0
IB1		
IB2	Word	RTD1
IB3		
IB4	Word	RTD2
IB5		
IB6	Word	RTD3
IB7		

1) Internal process data mapping with data format “Standard”. Depending on the fieldbus specification and the data format of the communicating fieldbus components the bytes and/or words can be reversed during data transfer.

Resistance measurement ranges UR20-4AI-RTD-DIAG

Measurement range	Resistance	Decimal	Hexadecimal	Range
40 Ω	> 47.04 Ω	32767	0x7FFF	Overloading or line break
	47.04 Ω	32511	0x7EFF	Overloading
	40 Ω	27648	0x6C00	Nominal range
	0	0	0x0000	
80 Ω	> 94.07 Ω	32767	0x7FFF	Overloading or line break
	94.07 Ω	32511	0x7EFF	Overloading
	80 Ω	27648	0x6C00	Nominal range
	0	0	0x0000	
150 Ω	> 176.4 Ω	32767	0x7FFF	Overloading or line break
	176.4 Ω	32511	0x7EFF	Overloading
	150 Ω	27648	0x6C00	Nominal range
	0	0	0x0000	
300 Ω	> 352.77 Ω	32767	0x7FFF	Overloading or line break
	352.77 Ω	32511	0x7EFF	Overloading
	300 Ω	27648	0x6C00	Nominal range
	0	0	0x0000	
500 Ω	> 587.9 Ω	32767	0x7FFF	Overloading or line break
	587.9 Ω	32511	0x7EFF	Overloading
	500 Ω	27648	0x6C00	Nominal range
	0	0	0x0000	
1 kΩ	> 1.177 kΩ	32767	0x7FFF	Overloading or line break
	1.177 kΩ	32511	0x7EFF	Overloading
	1.0 kΩ	27648	0x6C00	Nominal range
	0	0	0x0000	
2 kΩ	> 2.352 kΩ	32767	0x7FFF	Overloading or line break
	2.352 kΩ	32511	0x7EFF	Overloading
	2.0 kΩ	27648	0x6C00	Nominal range
	0	0	0x0000	
4 kΩ	> 4.703 kΩ	32767	0x7FFF	Overloading or line break
	4.703 kΩ	32511	0x7EFF	Overloading
	4.0 kΩ	27648	0x6C00	Nominal range
	0	0	0x0000	

Temperature measurement ranges UR20-4AI-RTD-DIAG

Measurement range	Value in °C 0.1 ° resolution	Value in °F 0.1 °/digit	Value in K 0.1 K/digit	Range
Pt100	-2000 to 8500	-3280 to 15620	732 to 11232	-200 °C to +850 °C
	-2040	-3352	692	Underloading
	8540	15692	11272	Overloading
	32767	32767	32767	Line break
Pt200	-2000 to 8500	-3280 to 15620	732 to 11232	-200 °C to +850 °C
	-2040	-3352	692	Underloading
	8540	15692	11272	Overloading
	32767	32767	32767	Line break
Pt500	-2000 to 8500	-3280 to 15620	732 to 11232	-200 °C to +850 °C
	-2040	-3352	692	Underloading
	8540	15692	11272	Overloading
	32767	32767	32767	Line break
Pt1000	-2000 to 8500	-3280 to 15620	732 to 11232	-200 °C to +850 °C
	-2040	-3352	692	Underloading
	8540	15692	11272	Overloading
	32767	32767	32767	Line break
Ni100	-600 to +2500	-760 to 4820	2132 to 5232	-60 °C to 250 °C
	-640	-832	2092	Underloading
	2540	4892	5272	Overloading
	32767	32767	32767	Line break
Ni120	-800 to +2600	-1120 to +5000	1932 to 5332	-80 °C to 260 °C
	-840	-1192	1892	Underloading
	2640	5072	5372	Overloading
	32767	32767	32767	Line break
Ni200	-600 to +2500	-760 to 4820	2132 to 5232	-60 °C to 250 °C
	-640	-832	2092	Underloading
	2540	4892	5272	Overloading
	32767	32767	32767	Line break
Ni500	-600 to +2500	-760 to 4820	2132 to 5232	-60 °C to 250 °C
	-640	-832	2092	Underloading
	2540	4892	5272	Overloading
	32767	32767	32767	Line break

Temperature measurement ranges UR20-4AI-RTD-DIAG

Measurement range	Value in °C 0.1 ° resolution	Value in °F 0.1 °/digit	Value in K 0.1 K/digit	Range
Ni1000	-600 to +2500	-760 to 4820	2132 to 5232	-60 °C to 250 °C
	-640	-832	2092	Underloading
	2540	4892	5272	Overloading
	32767	32767	32767	Line break
Cu10	-1000 to +2600	-1480 to 5000	1732 to 5332	-100 °C to 260 °C
	-1040	-1552	1692	Underloading
	2640	5072	5372	Overloading
	32767	32767	32767	Line break

Process alarm UR20-4AI-RTD-DIAG

Name	Number of bytes	Function
High alarm	1	Bit 0: Upper limit exceeded channel 0
		Bit 1: Upper limit exceeded channel 1
		Bit 2: Upper limit exceeded channel 2
		Bit 3: Upper limit exceeded channel 3
		Bit 4 – 7: Reserved
Low Alarm	1	Bit 0: Lower limit underrun channel 0
		Bit 1: Lower limit underrun channel 1
		Bit 2: Lower limit underrun channel 2
		Bit 3: Lower limit underrun channel 3
		Bit 4 – 7: Reserved
Timestamp	2	The two least significant bytes of the internal 32-bit timer

6.53 Analogue input module UR20-4AI-RTD-HP-DIAG

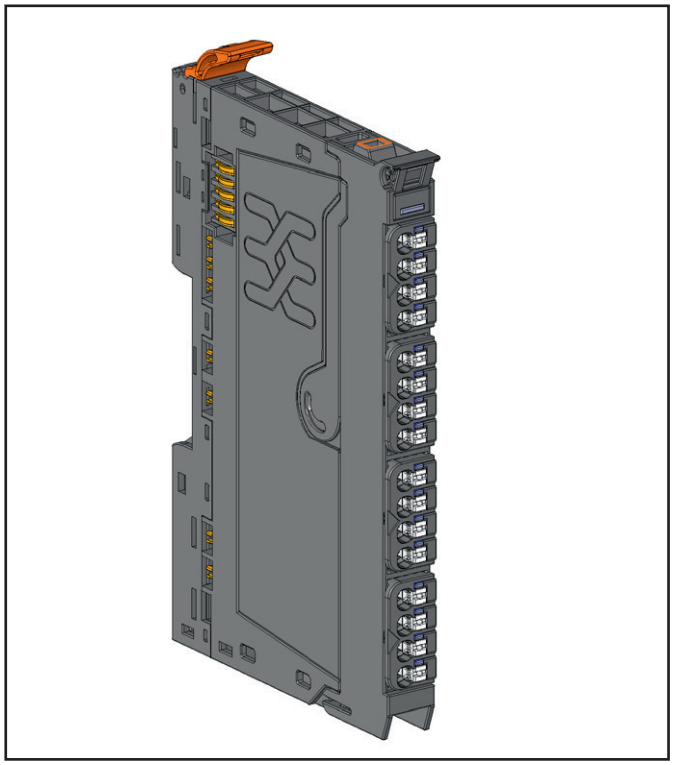

Analogue input module UR20-4AI-RTD-HP-DIAG (Item No. 2456540000)

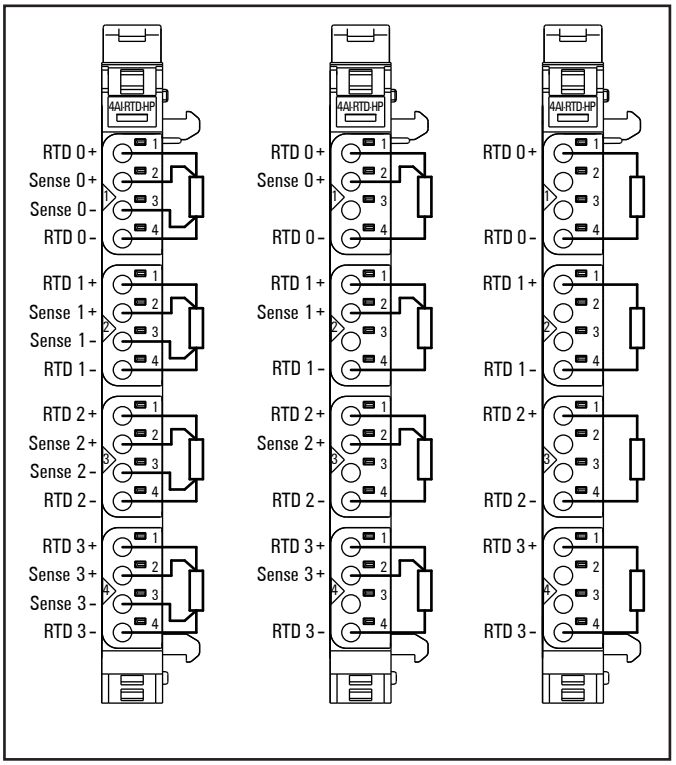

Connection diagram UR20-4AI-RTD-HP-DIAG

The analogue input module UR20-4AI-RTD-HP-DIAG can detect up to 4 analogue resistance thermometers. The module is intended for high precision applications. The resolution is 16 bit per channel. A sensor can be connected to each connector in a 2-wire, 3-wire or 4-wire connection. Mixed operation using different sensors as well as different connection methods is possible. Sensor type and temperature range are set using parameterisation. A user calibration can be parameterised for resistance measurements. A status LED is assigned to each channel.

The inputs are protected against voltage surges and overcurrent. Voltages that exceed ±30 V may cause the destruction of the module.

The module provides individual channel diagnosis with channel related error messages.

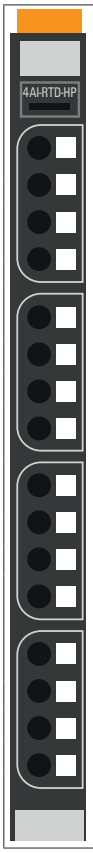

	Module status LED Green: Communication over the system bus Red: Error
1.1	Red: Signal at input 0 outside the permissible range, line break or short-circuit
2.1	Red: Signal at input 1 outside the permissible range, line break or short-circuit
3.1	Red: Signal at input 2 outside the permissible range, line break or short-circuit
4.1	Red: Signal at input 3 outside the permissible range, line break or short-circuit

LED indicators UR20-4AI-RTD-HP-DIAG, troubleshooting see Chapter 12

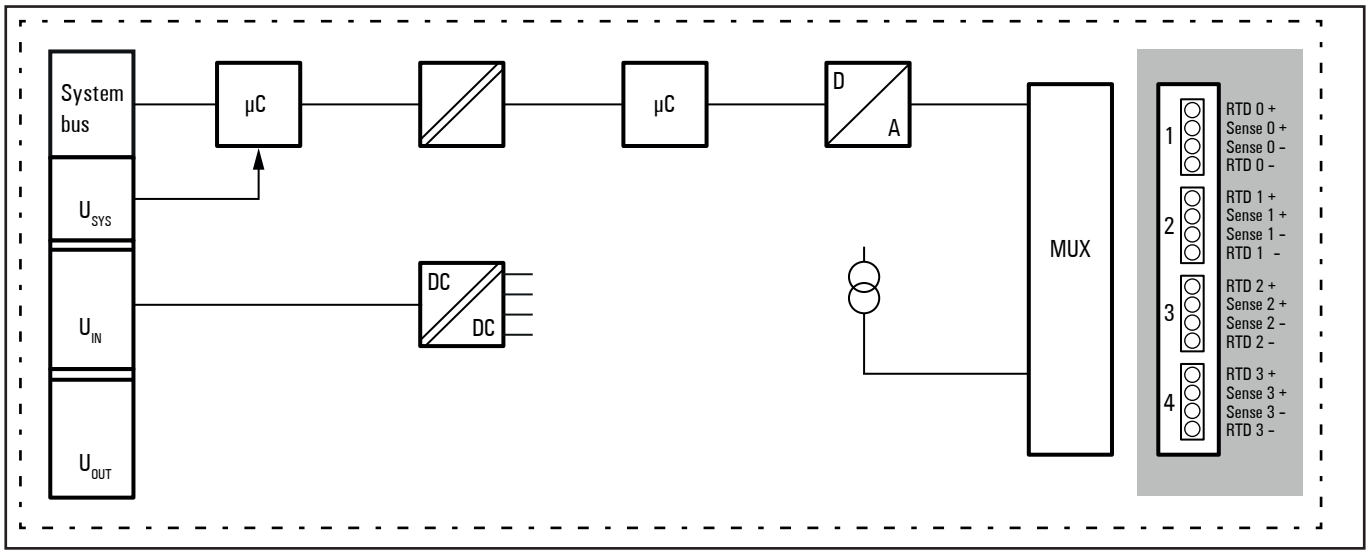

Block diagram UR20-4AI-RTD-HP-DIAG

Technical data UR20-4AI-RTD-HP-DIAG (Item No.2456540000)

System data		
Data	Process, parameter and diagnostic data depend on the coupler used, see coupler description.	
Interface	u-remote system bus	
System bus transfer rate	48 Mbps	
Potential isolation	Channel/system bus	yes
	Channel/channel	no
Inputs		
Number	4	
Sensor types	Pt100, Pt200, Pt500, Pt1000, Ni100, Ni120, Ni 200, Ni500, Ni1000, Cu10, 40 Ω, 80 Ω, 150 Ω, 300 Ω, 500 Ω, 1 kΩ, 2 kΩ, 4 kΩ	
Resolution	16 bits	
Accuracy	Measurement range Pt100 (-200 ... +250 °C)	max. 0,1 K (conversion time ≥ 80 ms, only 4-wire measurement) max. 0,2 K (conversion time ≥ 80 ms) max. 0,6 K (conversion time < 80 ms)
	Pt sensors and resistance measurement	max. 0,05 % FSR (conversion time ≥ 80 ms, only 4-wire measurement) max. 0,1 % FSR (conversion time ≥ 80 ms) max. 0,2 % FSR (conversion time < 80 ms)
	Ni sensors	max. 0,2 % FSR (conversion time ≥ 80 ms) max. 0,3 % FSR (conversion time < 80 ms)
	Cu10	max. 0,4 % FSR (conversion time ≥ 80 ms) max. 0,6 % FSR (conversion time < 80 ms)
Sensor connection	2-wire, 3-wire, 4-wire	
Sensor current	depending on the sensor type 0,75 mA (Pt100, Ni100, Ni120, Cu10, 40 Ω, 80 Ω, 150 Ω, 300 Ω) or 0,25 mA (Pt200, Pt500, Pt1000, Ni200, Ni500, Ni1000, 500 Ω, 1 kΩ, 2 kΩ, 4 kΩ)	
Max. wire resistance / measurement range	2.5 Ω / 40 Ω, 5 Ω / 80 Ω and PT100 (-200 ... +250 °C), 10 Ω / 150 Ω and Cu10, 25 Ω in all other measuring ranges	
Temperature coefficient	±20 ppm/K max.	
Temperature range	-200 ... +850 °C	
Conversion time	36 to 240 ms, adjustable	
Common mode input voltage range	Channel to channel: max. ±1 V	
	Channel to voltage supply: max. ±50 V	
Reverse polarity protection	yes	
Module diagnosis	yes	
Individual channel diagnosis	yes	
Supply		
Supply voltage	24 V DC +20 %/-15 %	
Current consumption from system current path I_{SYS}	8 mA	
Current consumption from input current path I_{IN}	< 20 mA	
General data		
Weight (operational status)	91 g	
For additional general data, see Section 3.4		

Overview of the editable parameters UR20-4AI-RTD-HP-DIAG

Channel	Description	Options[1)]	Default
	Temperature unit	Degree Celsius (0) / Degree Fahrenheit (1) / Kelvin (2)	Degree Celsius
0 ... 3	Measurement range	PT100 -200 ... 850 Degree Celsius (0) / PT100 -200 ... 250 Degree Celsius (1) / PT200 -200 ... 850 Degree Celsius (2) / PT500 -200 ... 850 Degree Celsius (3) / PT1000 -200 ... 850 Degree Celsius (4) / NI100 -60 ... 250 Degree Celsius (5) / NI120 -80 ... 260 Degree Celsius (6) / NI200 -60 ... 250 Degree Celsius (7) / NI500 -60 ... 250 Degree Celsius (8) / NI1000 -60 ... 250 Degree Celsius (9) / NI1000-LG -60 ... 250 Degree Celsius (10) / Cu10 -100 ... 260 Degree Celsius (11) / Resistance 40 Ω (12)/ Resistance 80 Ω (13)/ Resistance 150 Ω (14) / Resistance 300 Ω (15) / Resistance 500 Ω (16) / Resistance 1000 Ω (17) / Resistance 2000 Ω (18) / Resistance 4000 Ω (19) / disabled (20)	disabled
0 ... 3	Connection type	2-wire (0) / 3-wire (1) / 4-wire (2)	2-wire
0 ... 3	Conversion time	240 ms (0) / 130 ms (1) / 80 ms (2) / 55 ms (3) / 43 ms (4) / 36 ms (5)	80 ms
0 ... 3	Channel diagnostics	disabled (0) / enabled (1)	disabled
0 ... 3	Limit value monitoring	disabled (0) / enabled (1)	disabled
0 ... 3	High limit value	-32768 ... 32767	32767
0 ... 3	Low limit value	-32768 ... 32767	-32768
0 ... 3	User calibration[2)]	disabled (0) / enabled (1)	disabled
0 ... 3	User calibration offset	-32768 ... 32767	0
0 ... 3	User calibration gain	0 ... 65535	32768

1) Values in brackets for Modbus-TCP (firmware version 02.00.00 and higher), CANopen, EtherCAT and EtherNet/IP via module parameter class
2) For further information about this parameter see page

Diagnostic data UR20-4AI-RTD-HP-DIAG

Name	Bytes	Bit	Description	Default
Error indicator	0	0	Module error	
		1	Internal error	
		2	External error	
		3	Channel error	
		4	Error	
		5	Power supply fault	
		6	Reserved	0
		7	Parameter error	
Module types	1	0	Module type	0x05
		1		
		2		
		3		
		4	Channel information available	1
		5	Reserved	0
		6	Reserved	0
		7	Reserved	0
Error byte 2	2	0 – 7	Reserved	0
Error byte 3	3	0 – 2	Reserved	0
		3	Internal diagnostic FIFO full	
		4	Power supply fault	
		5	Reserved	0
		6	Process alarm lost	
		7	Reserved	0
Channel type	4	0 – 6	Channel type	0x71
		7	Reserved	0
Diagnostic bits per channel	5		Number of diagnostic bit per channel	8
Number of channels	6		Number of similar channels per module	4
Channel error	7	0	Error at channel 0	
		1	Error at channel 1	
		2	Error at channel 2	
		3	Error at channel 3	
		4 – 7	Reserved	0
Channel error	8	8 – 15	Reserved	0
Channel error	9	16 – 23	Reserved	0
Channel error	10	24 – 31	Reserved	0
Channel 0 error	11	0	Parameter error	
		1	Reserved	0
		2	Reserved	0
		3	Reserved	0
		4	Line break	
		5	Process alarm lost	
		6	Lower limit exceeded	
		7	Upper limit exceeded	

Diagnostic data UR20-4AI-RTD-HP-DIAG

Name	Bytes	Bit	Description	Default
Channel 1 error	12	0	Parameter error	
		1	Reserved	0
		2	Reserved	0
		3	Reserved	0
		4	Line break	
		5	Process alarm lost	
		6	Lower limit exceeded	
		7	Upper limit exceeded	
Channel 2 error	13	0	Parameter error	
		1	Reserved	0
		2	Reserved	0
		3	Reserved	0
		4	Line break	
		5	Process alarm lost	
		6	Lower limit exceeded	
		7	Upper limit exceeded	
Channel 3 error	14	0	Parameter error	
		1	Reserved	0
		2	Reserved	0
		3	Reserved	0
		4	Line break	
		5	Process alarm lost	
		6	Lower limit exceeded	
		7	Upper limit exceeded	
Channel 4 error to Channel 31 error	15 – 42	0 – 7	Reserved	0
Time stamp	43 – 46		Time stamp [µs] (32 bit)	

Process data[1] inputs UR20-4AI-RTD-HP-DIAG

Byte	Format	Description
IB0	Word	RTD0
IB1		
IB2	Word	RTD1
IB3		
IB4	Word	RTD2
IB5		
IB6	Word	RTD3
IB7		

1) Internal process data mapping with data format “Standard”. Depending on the fieldbus specification and the data format of the communicating fieldbus components the bytes and/or words can be reversed during data transfer.

Resistance measurement ranges UR20-4AI-RTD-HP-DIAG

Measurement range	Resistance	Decimal	Hexadecimal	Range
40 Ω	> 47.04 Ω	32767	0x7FFF	Overloading or line break
	47.04 Ω	32511	0x7EFF	Overloading
	40 Ω	27648	0x6C00	Nominal range
	0	0	0x0000	
80 Ω	> 94.07 Ω	32767	0x7FFF	Overloading or line break
	94.07 Ω	32511	0x7EFF	Overloading
	80 Ω	27648	0x6C00	Nominal range
	0	0	0x0000	
150 Ω	> 176.4 Ω	32767	0x7FFF	Overloading or line break
	176.4 Ω	32511	0x7EFF	Overloading
	150 Ω	27648	0x6C00	Nominal range
	0	0	0x0000	
300 Ω	> 352.77 Ω	32767	0x7FFF	Overloading or line break
	352.77 Ω	32511	0x7EFF	Overloading
	300 Ω	27648	0x6C00	Nominal range
	0	0	0x0000	
500 Ω	> 587.9 Ω	32767	0x7FFF	Overloading or line break
	587.9 Ω	32511	0x7EFF	Overloading
	500 Ω	27648	0x6C00	Nominal range
	0	0	0x0000	
1 kΩ	> 1.177 kΩ	32767	0x7FFF	Overloading or line break
	1.177 kΩ	32511	0x7EFF	Overloading
	1.0 kΩ	27648	0x6C00	Nominal range
	0	0	0x0000	
2 kΩ	> 2.352 kΩ	32767	0x7FFF	Overloading or line break
	2.352 kΩ	32511	0x7EFF	Overloading
	2.0 kΩ	27648	0x6C00	Nominal range
	0	0	0x0000	
4 kΩ	> 4.703 kΩ	32767	0x7FFF	Overloading or line break
	4.703 kΩ	32511	0x7EFF	Overloading
	4.0 kΩ	27648	0x6C00	Nominal range
	0	0	0x0000	

Temperature measurement ranges UR20-4AI-RTD-HP-DIAG

Measurement range	Value in °C 0.01 ° resolution	Value in °F 0.02 °/digit	Value in K 0.02 K/digit	Range
Pt100 (-200 ... +250 °C)	-20000 to 25000	-16400 to 24100	3658 to 26158	-200 °C to +250 °C
	-20400	-16760	3458	Underloading
	25400	15692	26358	Overloading
	32767	32767	32767	Line break
Measurement range	**Value in °C 0.1 ° resolution**	**Value in °F 0.1 °/digit**	**Value in K 0.1 K/digit**	**Range**
Pt100	-2000 to 8500	-3280 to 15620	732 to 11232	-200 °C to +850 °C
	-2040	-3352	692	Underloading
	8540	15692	11272	Overloading
	32767	32767	32767	Line break
Pt200	-2000 to 8500	-3280 to 15620	732 to 11232	-200 °C to +850 °C
	-2040	-3352	692	Underloading
	8540	15692	11272	Overloading
	32767	32767	32767	Line break
Pt500	-2000 to 8500	-3280 to 15620	732 to 11232	-200 °C to +850 °C
	-2040	-3352	692	Underloading
	8540	15692	11272	Overloading
	32767	32767	32767	Line break
Pt1000	-2000 to 8500	-3280 to 15620	732 to 11232	-200 °C to +850 °C
	-2040	-3352	692	Underloading
	8540	15692	11272	Overloading
	32767	32767	32767	Line break
Ni100	-600 to +2500	-760 to 4820	2132 to 5232	-60 °C to 250 °C
	-640	-832	2092	Underloading
	2540	4892	5272	Overloading
	32767	32767	32767	Line break
Ni120	-800 to +2600	-1120 to +5000	1932 to 5332	-80 °C to 260 °C
	-840	-1192	1892	Underloading
	2640	5072	5372	Overloading
	32767	32767	32767	Line break

Measurement range	Value in °C 0.1 ° resolution	Value in °F 0.1 °/digit	Value in K 0.1 K/digit	Range
Ni200	-600 to +2500	-760 to 4820	2132 to 5232	-60 °C to 250 °C
	-640	-832	2092	Underloading
	2540	4892	5272	Overloading
	32767	32767	32767	Line break
Ni500	-600 to +2500	-760 to 4820	2132 to 5232	-60 °C to 250 °C
	-640	-832	2092	Underloading
	2540	4892	5272	Overloading
	32767	32767	32767	Line break
Ni1000	-600 to +2500	-760 to 4820	2132 to 5232	-60 °C to 250 °C
	-640	-832	2092	Underloading
	2540	4892	5272	Overloading
	32767	32767	32767	Line break
Cu10	-1000 to +2600	-1480 to 5000	1732 to 5332	-100 °C to 260 °C
	-1040	-1552	1692	Underloading
	2640	5072	5372	Overloading
	32767	32767	32767	Line break

Process alarm UR20-4AI-RTD-HP-DIAG

Name	Number of bytes	Function
High alarm	1	Bit 0: Upper limit exceeded channel 0
		Bit 1: Upper limit exceeded channel 1
		Bit 2: Upper limit exceeded channel 2
		Bit 3: Upper limit exceeded channel 3
		Bit 4 – 7: Reserved
Low Alarm	1	Bit 0: Lower limit underrun channel 0
		Bit 1: Lower limit underrun channel 1
		Bit 2: Lower limit underrun channel 2
		Bit 3: Lower limit underrun channel 3
		Bit 4 – 7: Reserved
Timestamp	2	The two least significant bytes of the internal 32-bit timer

User calibration

You can compensate application specific deviations of measuring values by using the user calibration. You can define an offset value or scale the measuring values by a factor.

$I_U = (I_M - O_U) \times 2^{-15} \times G_U$
O_U = User calibration offset
G_U = User calibration gain
I_M = Input signal (manufacturer calibration)
I_U = Input signal (user calibration)

The user calibration factor can be parameterised using a value from 0 to 65535 which equates to the factor 0 to approximately 2. The default 32768 equates to 1 ($G_U = 32768 \times 2^{-15}$).

Example: setting an offset

You are using the 300 Ω measurement range and the process data deviate from the nominal value by 20 digits (see table measurement range).
In order to compensate the deviation ΔD = 20 please calculate the offset value ΔI_U using the conversion factor k listed in adjacent table:

$O_U = 20/k = 20/1{,}266 = 15{,}8$

Enter the proximate whole-number 16 as offset value in the web server.

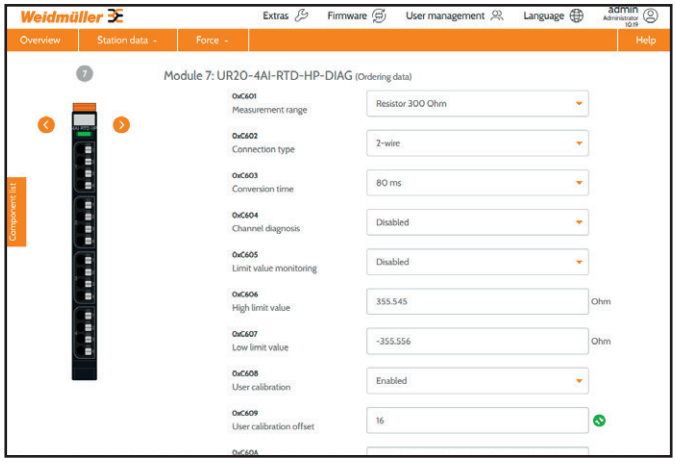

Parameter setting user calibration in the web server

Conversion factor for the user calibration offset

Measurement range	$k = \Delta D/\Delta I_U$	
PT100 -200...850 °C	0,357	Approx. for Degree Celsius
PT100 -200...250 °C	1,783	Approx. for Degree Celsius
PT200 -200...850 °C	0,505	Approx. for Degree Celsius
PT500 -200...850 °C	0,404	Approx. for Degree Celsius
PT1000 -200...850 °C	0,404	Approx. for Degree Celsius
NI100 -60...250 °C	0,222	Approx. for Degree Celsius
NI120 -80...260 °C	0,170	Approx. for Degree Celsius
NI200 -60...250 °C	0,315	Approx. for Degree Celsius
NI500 -60...250 °C	0,252	Approx. for Degree Celsius
NI1000 -60...250 °C	0,252	Approx. for Degree Celsius
NI1000-LG -60...250 °C	0,311	Approx. for Degree Celsius
Cu10 -100...260 °C	0,445	Approx. for Degree Celsius
40 Ω / 80 Ω	1,187	
150 Ω / 300 Ω	1,266	
500 Ω / 1000 Ω / 2000 Ω / 4000 Ω	1,076	

6.54 Analogue input module UR20-4AI-TC-DIAG

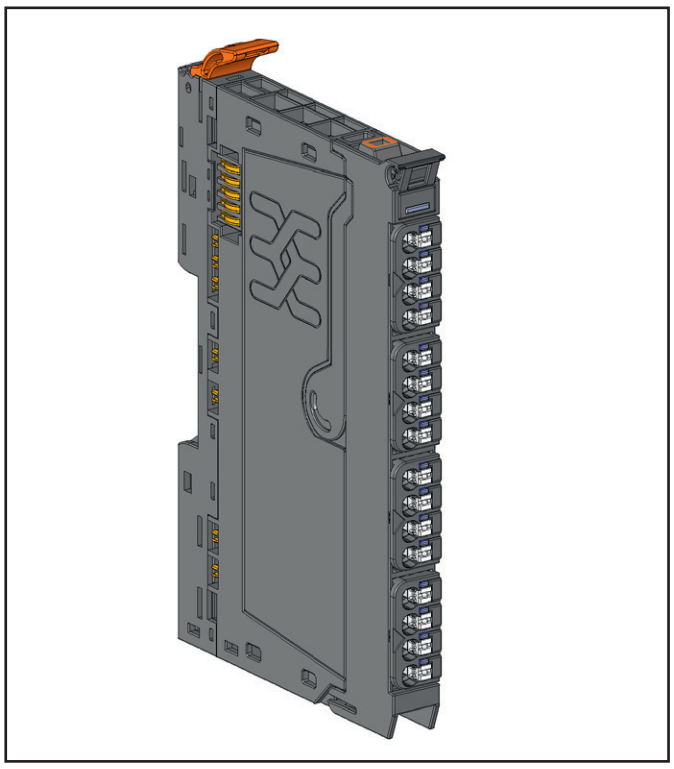

Analogue input module UR20-4AI-TC-DIAG (Item No. 1315710000)

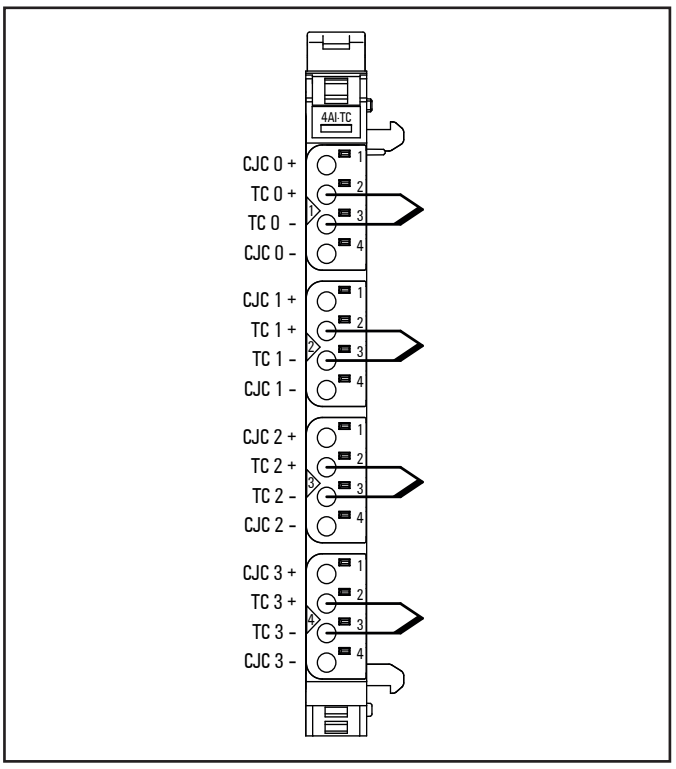

Connection diagram UR20-4AI-TC-DIAG , internal CJC

The analogue input module UR20-4AI-TC-DIAG can detect up to 4 analogue thermocouple sensors or voltages between ±15 mV and ±2 V. The resolution is 16 bit per channel. Sensor type and temperature range are set using parameterisation. Mixed operation using different sensors is possible. For each channel, an internal or external cold-junction compensation (CJC) can be parameterized. A status LED is assigned to each channel.
The inputs are protected against voltage surges and overcurrent. Voltages that exceed ±30 V may cause the destruction of the module.
The module provides individual channel diagnosis with channel related error messages.

Please regard the following when using an external cold-junction compensation:

- ► Install a PT1000 thermo sensor at the junction between thermocouple wire and copper wire.
- ► Connect this thermo sensor with CJC+ and CJC– of the channel that you will parameterise for the compensation.

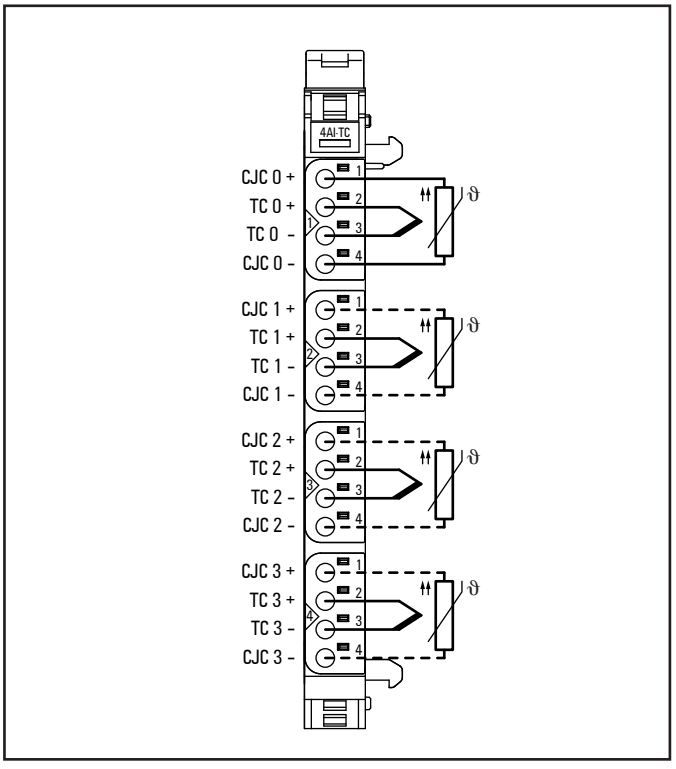

Connection diagram UR20-4AI-TC-DIAG , external CJC



	Module status LED Green: Communication over the system bus Red: Error
1.1	Red: Signal at input 0 outside the permissible range, line break or cold-junction compensation error
2.1	Red: Signal at input 1 outside the permissible range, line break or cold-junction compensation error
3.1	Red: Signal at input 2 outside the permissible range, line break or cold-junction compensation error
4.1	Red: Signal at input 3 outside the permissible range, line break or cold-junction compensation error

LED indicators UR20-4AI-TC-DIAG, troubleshooting see Chapter 12

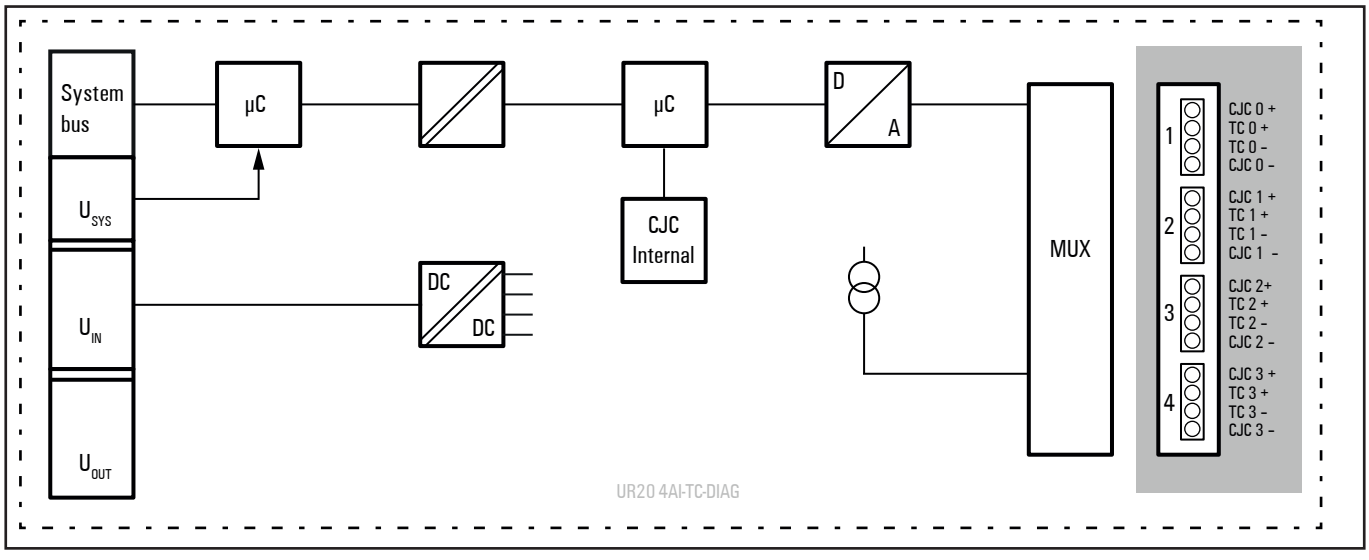

Block diagram UR20-4AI-TC-DIAG

Technical data UR20-4AI-TC-DIAG (Item No. 1315710000)

System data		
Data	Process, parameter and diagnostic data depend on the coupler used, see coupler description.	
Interface	u-remote system bus	
System bus transfer rate	48 Mbps	
Potential isolation	Channel/system bus	yes
	Channel/channel	no
Inputs		
Number	4	
Sensor types	J, K, T, B, N, E, R, S, L, U, C, mV	
Resolution	16 bits	
Accuracy	Conversion time ≥ 80 ms: 10 µV + 0.1 % of voltage measurement range (without cold-junction measurement error)	
Sensor connection	2-wire	
Sensor current	0,25 mA for the cold-junction compensation with a Pt1000	
Cold-junction compensation	Internal and external (Pt1000), int. accuracy ≤3 K	
Temperature coefficient	±50 ppm/K max.	
Temperature range	-200 °C ... +2315 °C	
Conversion time	36 ... 240 ms, adjustable	
Common mode input voltage range	Channel to channel: max. ±2 V	
	Channel to voltage supply: max. ±50 V	
Internal resistance	> 1 MΩ	
Reverse polarity protection	yes	
Module diagnosis	yes	
Individual channel diagnosis	yes	
Supply		
Supply voltage	24 V DC +20 %/-15 %	
Current consumption from system current path I_{SYS}	8 mA	
Current consumption from input current path I_{IN}	20 mA	
General data		
Weight (operational status)	86 g	
For additional general data, see Section 3.4		

Overview of the editable parameters UR20-4AI-TC-DIAG

Channel	Description	Options[1)]	Default
	Temperature unit	Degree Celsius (0) / Degree Fahrenheit (1) / Kelvin (2)	Degree Celsius
0 ... 3	Measurement range	TC Type J (0) / TC Type K (1) / TC Type N (2) / TC Type R (3) / TC Type S (4) / TC Type T (5) / TC Type B (6) / TC Type C (7) / TC Type E (8) / TC Type L (9) / TC Type U (10) / ± 15,625 mV (11) / ± 31,25 mV (12) / ± 62,5 mV (13) / ± 125 mV (14) / ± 250 mV (15) / ± 500 mV (16) / ± 1000 mV (17) / ± 2000 mV (18) / disabled (19)	disabled
0 ... 3	Cold junction compensation	internal (0) / external Channel 0 (1) / external Channel 1 (2) / external Channel 2 (3) / external Channel 3 (4)	internal
0 ... 3	Conversion time	240 ms (0) / 130 ms (1) / 80 ms (2) / 55 ms (3) / 43 ms (4) / 36 ms (5)	80 ms
0 ... 3	Channel diagnostics	disabled (0) / enabled (1)	disabled
0 ... 3	Limit value monitoring	disabled (0) / enabled (1)	disabled
0 ... 3	High limit value	-32768 ... 32767	32767
0 ... 3	Low limit value	-32768 ... 32767	-32768

1) Values in brackets for Modbus-TCP (firmware version 02.00.00 and higher), CANopen, EtherCAT and EtherNet/IP via module parameter class

Diagnostic data UR20-4AI-TC-DIAG

Name	Bytes	Bit	Description	Default
Error indicator	0	0	Module error	
		1	Internal error	
		2	External error	
		3	Channel error	
		4	Error	
		5	Power supply fault	
		6	Reserved	0
		7	Parameter error	
Module types	1	0	Module type	0x05
		1		
		2		
		3		
		4	Channel information available	1
		5	Reserved	0
		6	Reserved	0
		7	Reserved	0
Error byte 2	2	0 – 7	Reserved	0
Error byte 3	3	0 – 2	Reserved	0
		3	Internal diagnostic FIFO full	
		4	Power supply fault	
		5	Reserved	0
		6	Process alarm lost	
		7	Reserved	0
Channel type	4	0 – 6	Channel type	0x71
		7	Reserved	0
Diagnostic bits per channel	5		Number of diagnostic bit per channel	8
Number of channels	6		Number of similar channels per module	4
Channel error	7	0	Error at channel 0	
		1	Error at channel 1	
		2	Error at channel 2	
		3	Error at channel 3	
		4 – 7	Reserved	0
Channel error	8	8 – 15	Reserved	0
Channel error	9	16 – 23	Reserved	0
Channel error	10	24 – 31	Reserved	0
Channel 0 error	11	0	Parameter error	
		1	Reserved	0
		2	Reserved	0
		3	CJC error	
		4	Line break	
		5	Process alarm lost	
		6	Lower limit exceeded	
		7	Upper limit exceeded	

Diagnostic data UR20-4AI-TC-DIAG

Name	Bytes	Bit	Description	Default
Channel 1 error	12	0	Parameter error	
		1	Reserved	0
		2	Reserved	0
		3	CJC error	
		4	Line break	
		5	Process alarm lost	
		6	Lower limit exceeded	
		7	Upper limit exceeded	
Channel 2 error	13	0	Parameter error	
		1	Reserved	0
		2	Reserved	0
		3	CJC error	
		4	Line break	
		5	Process alarm lost	
		6	Lower limit exceeded	
		7	Upper limit exceeded	
Channel 3 error	14	0	Parameter error	
		1	Reserved	0
		2	Reserved	0
		3	CJC error	
		4	Line break	
		5	Process alarm lost	
		6	Lower limit exceeded	
		7	Upper limit exceeded	
Channel 4 error to Channel 31 error	15 – 42	0 – 7	Reserved	0
Time stamp	43 – 46		Time stamp [µs] (32 bit)	

Process data[1] inputs UR20-4AI-TC-DIAG

Byte	Format	Description
IB0	Word	TC0
IB1		
IB2	Word	TC1
IB3		
IB4	Word	TC2
IB5		
IB6	Word	TC3
IB7		

1) Internal process data mapping with data format “Standard”. Depending on the fieldbus specification and the data format of the communicating fieldbus components the bytes and/or words can be reversed during data transfer.

Voltage measurement ranges UR20-4AI-TC-DIAG

Measurement range	Voltage	Decimal signal range	Hexadecimal signal range
±15.625 mV	15.625 mV	32767	0x7FFF
	-15.625 mV	-32768	0x8000
±31.25 mV	31.25 mV	32767	0x7FFF
	-31.25 mV	-32768	0x8000
±62.5 mV	62.5 mV	32767	0x7FFF
	-62.5 mV	-32768	0x8000
±125 mV	125 mV	32767	0x7FFF
	-125 mV	-32768	0x8000
±250 mV	250 mV	32767	0x7FFF
	-250 mV	-32768	0x8000
±500 mV	500 mV	32767	0x7FFF
	-500 mV	-32768	0x8000
±1 V	+1 V	32767	0x7FFF
	-1 V	-32768	0x8000
±2 V	+2 V	32767	0x7FFF
	-2 V	-32768	0x8000

Temperature measurement ranges UR20-4AI-TC-DIAG

Measurement range	Value in °C 0.1 ° resolution Bit significance	Value in °F 0.1 °F Bit significance	Value in K 0.1°K Bit significance	Range
Type K	-2000 to 13720	-3280 to 25016	732 to 16452	-200 °C to +1372 °C
	-2040	-3352	692	Underloading
	13760	25088	16492	Overloading
	32767	32767	32767	Line break, cold compensation error
Type J	-2100 to 12000	-3460 to 21920	632 to 14732	-210 °C to +1200 °C
	-2140	-3532	592	Underloading
	12040	21992	14772	Overloading
	32767	32767	32767	Line break, cold compensation error
Type B	500 to 18200	1220 to 32767 (limited range) 3276.7 °F = 1802.6 °C	3232 to 20932	+50 °C to +1820 °C
	460	1148	3192	Underloading
	18240	32767	20972	Overloading
	32767	32767	32767	Line break, cold compensation error
Type N	-2000 to +13000	-3280 to 23720	4732 to 15732	-200 °C to +1300 °C
	-2040	-3352	692	Underloading
	13040	23792	15772	Overloading
	32767	32767	32767	Line break, cold compensation error
Type E	-2000 to +10000	-3280 to 18320	4732 to 12732	-200 °C to +1000 °C
	-2040	-3352	692	Underloading
	10040	18392	12772	Overloading
	32767	32767	32767	Line break, cold compensation error
Type R	-500 to +17680	-580 to +32144	3232 to 20412	-50 °C to +1768 °C
	-540	-652	2192	Underloading
	17720	32216	20452	Overloading
	32767	32767	32767	Line break, cold compensation error
Type S	-500 to +17680	-580 to +32144	3232 to 20412	-50 °C to +1768 °C
	-540	-652	2192	Underloading
	17720	32216	20452	Overloading
	32767	32767	32767	Line break, cold compensation error
Type T	-2000 to +4000	-3280 to 7520	732 to 6732	-200 °C to +400 °C
	-2040	-3352	692	Underloading
	4040	7592	6772	Overloading
	32767	32767	32767	Line break, cold compensation error

Temperature measurement ranges UR20-4AI-TC-DIAG

Measurement range	Value in °C 0.1 ° resolution Bit significance	Value in °F 0.1 °F Bit significance	Value in K 0.1°K Bit significance	Range
Type L	-2000 to +9000	-3280 to 16520	732 to 11732	-200 °C to +900 °C
	-2040	-3352	692	Underloading
	9040	16592	11772	Overloading
	32767	32767	32767	Line break, cold compensation error
Type U	-2000 to +6000	-3280 to 11120	732 to 8732	-200 °C to +600 °C
	-2040	-3352	692	Underloading
	6040	11192	8772	Overloading
	32767	32767	32767	Line break, cold compensation error
Type C	0 to 23150	320 to 32767 (limited range) 3276.7 °F = 1802.6 °C	2732 to 25882	0 to +2315 °C
	-40	248	2692	Underloading
	23190	32767	25922	Overloading
	32767	32767	32767	Line break, cold compensation error

Process alarm UR20-4AI-TC-DIAG

Name	Number of bytes	Function
High alarm	1	Bit 0: Upper limit exceeded channel 0
		Bit 1: Upper limit exceeded channel 1
		Bit 2: Upper limit exceeded channel 2
		Bit 3: Upper limit exceeded channel 3
		Bit 4 ... 7: Reserved
Low alarm	1	Bit 0: Lower limit underrun channel 0
		Bit 1: Lower limit underrun channel 1
		Bit 2: Lower limit underrun channel 2
		Bit 3: Lower limit underrun channel 3
		Bit 4 ... 7: Reserved
Timestamp	2	The two least significant bytes of the internal 32-bit timer

6.55 Analogue input module UR20-4AI-TC-CJT-DIAG

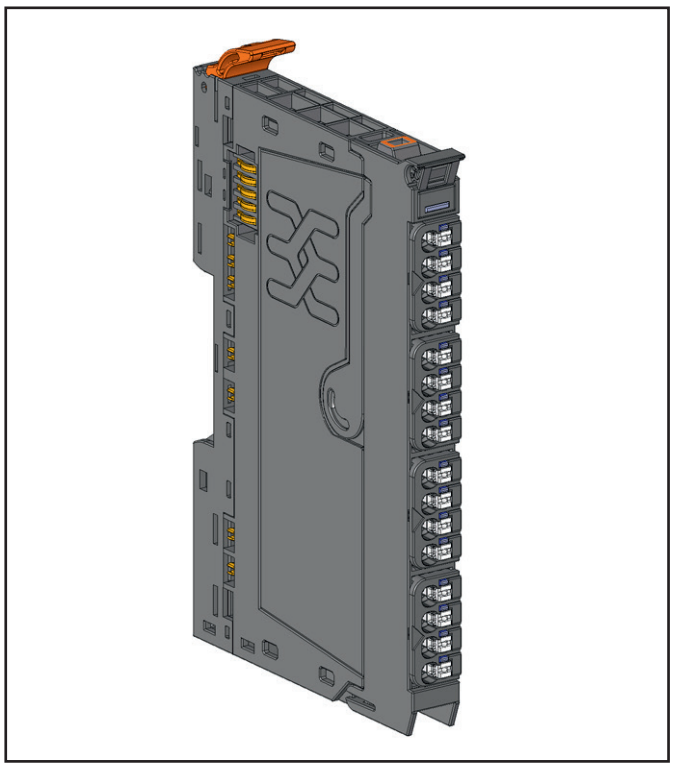

Analogue input module UR20-4AI-TC-CJT-DIAG (Order.-Nr. 3233190000)

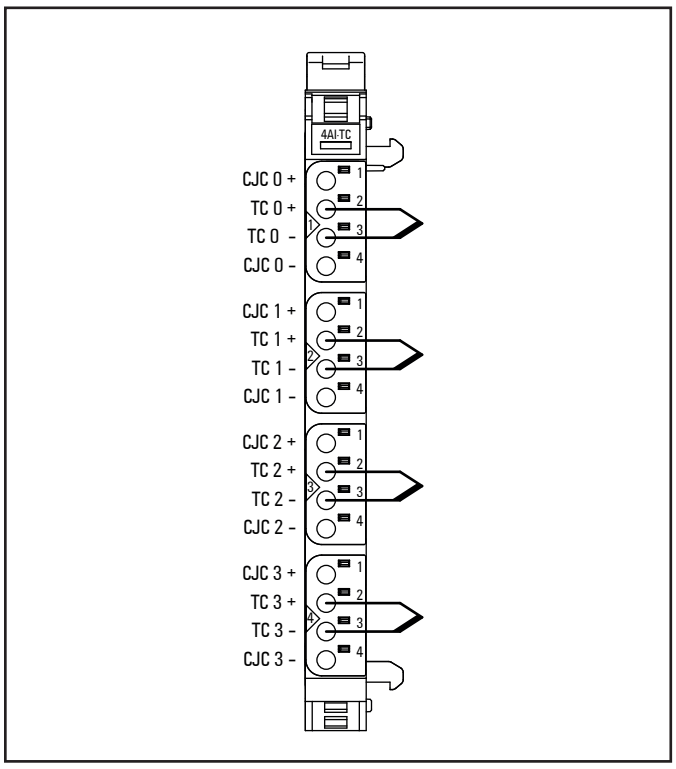

Connection diagram UR20-4AI-TC-CJT-DIAG, internal CJC

The analogue input module UR20-4AI-TC-CJT-DIAG can detect up to 4 analogue thermocouple sensors or voltages between ±15 mV and ±2 V. The resolution is 16 bit per channel. Sensor type and temperature range are set using parameterisation. Mixed operation using different sensors is possible. For each channel, an internal or external cold-junction compensation (CJC) can be parameterized. The cold junction temperatures of the four connected channels are provided cyclically via the process input data. A status LED is assigned to each channel.
The inputs are protected against voltage surges and overcurrent. Voltages that exceed ±30 V may cause the destruction of the module.
The module provides individual channel diagnosis with channel related error messages.

Please regard the following when using an external cold-junction compensation:

- ► Install a PT1000 thermo sensor at the junction between thermocouple wire and copper wire.
- ► Connect this thermo sensor with CJC+ and CJC– of the channel that you will parameterise for the compensation.

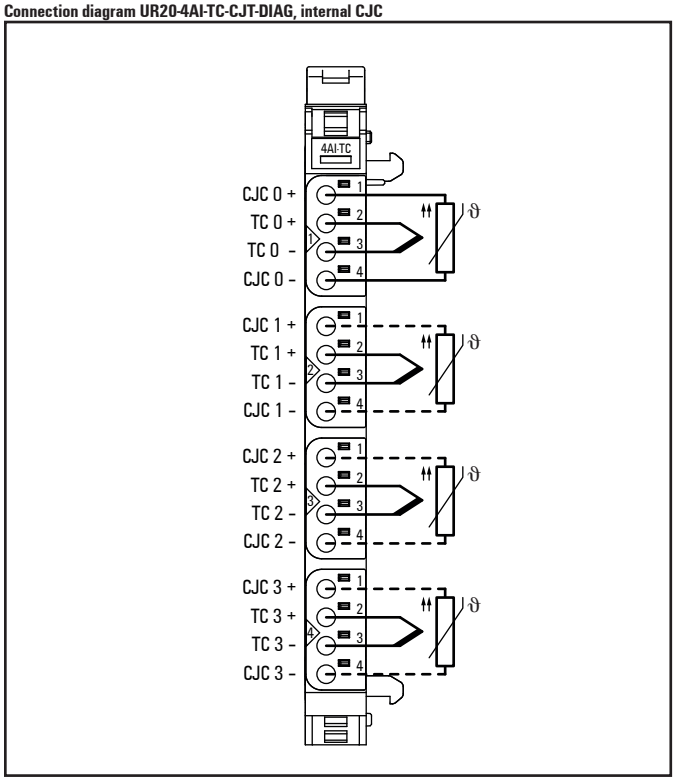

Connection diagram UR20-4AI-TC-CJT-DIAG, external CJC

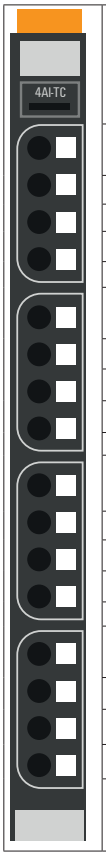

	Module status LED Green: Communication over the system bus Red: Error
1.1	Red: Signal at input 0 outside the permissible range, line break or cold-junction compensation error
2.1	Red: Signal at input 1 outside the permissible range, line break or cold-junction compensation error
3.1	Red: Signal at input 2 outside the permissible range, line break or cold-junction compensation error
4.1	Red: Signal at input 3 outside the permissible range, line break or cold-junction compensation error

LED indicators UR20-4AI-TC-CJT-DIAG, troubleshooting see Chapter 12

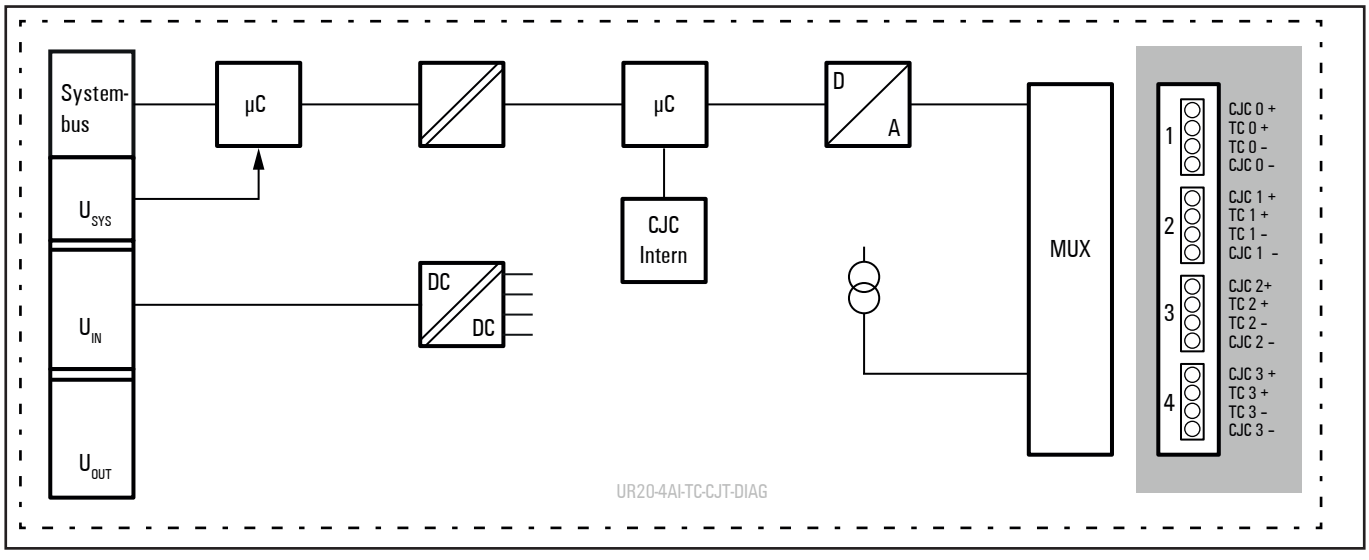

Block diagram UR20-4AI-TC-CJT-DIAG

Technical data UR20-4AI-TC-CJT-DIAG (Order No. 3233190000)

System data		
Data	Process, parameter and diagnostic data depend on the coupler used, see coupler description.	
Interface	u-remote system bus	
System bus transfer rate	48 Mbps	
Potential isolation	Channel/system bus	yes
	Channel/channel	no
Inputs		
Number	4	
Sensor types	J, K, T, B, N, E, R, S, L, U, C, mV	
Resolution	16 bits	
Accuracy	Conversion time ≥ 80 ms: 10 µV + 0.1 % of voltage measurement range (without cold-junction measurement error)	
Sensor connection	2-wire	
Sensor current	0,25 mA for the cold-junction compensation with a Pt1000	
Cold-junction compensation	Internal and external (Pt1000), int. accuracy ≤3 K	
Temperature coefficient	±50 ppm/K max.	
Temperature range	-200 °C … +2315 °C	
Conversion time	36 … 240 ms, adjustable	
Common mode input voltage range	Channel to channel: max. ±2 V	
	Channel to voltage supply: max. ±50 V	
Internal resistance	> 1 MΩ	
Reverse polarity protection	yes	
Module diagnosis	yes	
Individual channel diagnosis	yes	
Supply		
Supply voltage	24 V DC +20 %/-15 %	
Current consumption from system current path I_{SYS}	8 mA	
Current consumption from input current path I_{IN}	20 mA	
General data		
Weight (operational status)	86 g	
For additional general data, see Section 3.4		

Overview of the editable parameters UR20-4AI-TC-CJT-DIAG

Channel	Description	Options[1)]	Default
	Temperature unit	Degree Celsius (0) / Degree Fahrenheit (1) / Kelvin (2)	Degree Celsius
0 ... 3	Measurement range	TC Type J (0) / TC Type K (1) / TC Type N (2) / TC Type R (3) / TC Type S (4) / TC Type T (5) / TC Type B (6) / TC Type C (7) / TC Type E (8) / TC Type L (9) / TC Type U (10) / ± 15,625 mV (11) / ± 31,25 mV (12) / ± 62,5 mV (13) / ± 125 mV (14) / ± 250 mV (15) / ± 500 mV (16) / ± 1000 mV (17) / ± 2000 mV (18) / disabled (19)	disabled
0 ... 3	Cold junction compensation	internal (0) / external Channel 0 (1) / external Channel 1 (2) / external Channel 2 (3) / external Channel 3 (4)	internal
0 ... 3	Conversion time	240 ms (0) / 130 ms (1) / 80 ms (2) / 55 ms (3) / 43 ms (4) / 36 ms (5)	80 ms
0 ... 3	Channel diagnostics	disabled (0) / enabled (1)	disabled
0 ... 3	Limit value monitoring	disabled (0) / enabled (1)	disabled
0 ... 3	High limit value	-32768 ... 32767	32767
0 ... 3	Low limit value	-32768 ... 32767	-32768

1) Values in brackets for Modbus-TCP (firmware version 02.00.00 and higher), CANopen, EtherCAT and EtherNet/IP via module parameter class

Diagnostic data UR20-4AI-TC-CJT-DIAG

Name	Bytes	Bit	Description	Default
Error indicator	0	0	Module error	
		1	Internal error	
		2	External error	
		3	Channel error	
		4	Error	
		5	Power supply fault	
		6	Reserved	0
		7	Parameter error	
Module types	1	0	Module type	0x05
		1		
		2		
		3		
		4	Channel information available	1
		5	Reserved	0
		6	Reserved	0
		7	Reserved	0
Error byte 2	2	0 – 7	Reserved	0
Error byte 3	3	0 – 2	Reserved	0
		3	Internal diagnostic FIFO full	
		4	Power supply fault	
		5	Reserved	0
		6	Process alarm lost	
		7	Reserved	0
Channel type	4	0 – 6	Channel type	0x71
		7	Reserved	0
Diagnostic bits per channel	5		Number of diagnostic bit per channel	8
Number of channels	6		Number of similar channels per module	4
Channel error	7	0	Error at channel 0	
		1	Error at channel 1	
		2	Error at channel 2	
		3	Error at channel 3	
		4 – 7	Reserved	0
Channel error	8	8 – 15	Reserved	0
Channel error	9	16 – 23	Reserved	0
Channel error	10	24 – 31	Reserved	0
Channel 0 error	11	0	Parameter error	
		1	Reserved	0
		2	Reserved	0
		3	CJC error	
		4	Line break	
		5	Process alarm lost	
		6	Lower limit exceeded	
		7	Upper limit exceeded	

Diagnostic data UR20-4AI-TC-CJT-DIAG

Name	Bytes	Bit	Description	Default
Channel 1 error	12	0	Parameter error	
		1	Reserved	0
		2	Reserved	0
		3	CJC error	
		4	Line break	
		5	Process alarm lost	
		6	Lower limit exceeded	
		7	Upper limit exceeded	
Channel 2 error	13	0	Parameter error	
		1	Reserved	0
		2	Reserved	0
		3	CJC error	
		4	Line break	
		5	Process alarm lost	
		6	Lower limit exceeded	
		7	Upper limit exceeded	
Channel 3 error	14	0	Parameter error	
		1	Reserved	0
		2	Reserved	0
		3	CJC error	
		4	Line break	
		5	Process alarm lost	
		6	Lower limit exceeded	
		7	Upper limit exceeded	
Channel 4 error to Channel 31 error	15 – 42	0 – 7	Reserved	0
Time stamp	43 – 46		Time stamp [µs] (32 bit)	

Process data[1] inputs UR20-4AI-TC-CJT-DIAG

Byte	Format	Description
IB0	Word	TC0
IB1		
IB2	Word	TC1
IB3		
IB4	Word	TC2
IB5		
IB6	Word	TC3
IB7		
IB8	Word	CJT0
IB9		
IB10	Word	CJT1
IB11		
IB12	Word	CJT2
IB13		
IB14	Word	CJT3
IB15		

1) Internal process data mapping with data format “Standard”. Depending on the fieldbus specification and the data format of the communicating fieldbus components the bytes and/or words can be reversed during data transfer.

Voltage measurement ranges UR20-4AI-TC-CJT-DIAG

Measurement range	Voltage	Decimal signal range	Hexadecimal signal range
±15.625 mV	15.625 mV	32767	0x7FFF
	-15.625 mV	-32768	0x8000
±31.25 mV	31.25 mV	32767	0x7FFF
	-31.25 mV	-32768	0x8000
±62.5 mV	62.5 mV	32767	0x7FFF
	-62.5 mV	-32768	0x8000
±125 mV	125 mV	32767	0x7FFF
	-125 mV	-32768	0x8000
±250 mV	250 mV	32767	0x7FFF
	-250 mV	-32768	0x8000
±500 mV	500 mV	32767	0x7FFF
	-500 mV	-32768	0x8000
±1 V	+1 V	32767	0x7FFF
	-1 V	-32768	0x8000
±2 V	+2 V	32767	0x7FFF
	-2 V	-32768	0x8000

Temperature measurement ranges UR20-4AI-TC-CJT-DIAG

Measurement range	Value in °C 0.1 ° resolution Bit significance	Value in °F 0.1 °F Bit significance	Value in K 0.1°K Bit significance	Range
Type K	-2000 to 13720	-3280 to 25016	732 to 16452	-200 °C to +1372 °C
	-2040	-3352	692	Underloading
	13760	25088	16492	Overloading
	32767	32767	32767	Line break, cold compensation error
Type J	-2100 to 12000	-3460 to 21920	632 to 14732	-210 °C to +1200 °C
	-2140	-3532	592	Underloading
	12040	21992	14772	Overloading
	32767	32767	32767	Line break, cold compensation error
Type B	500 to 18200	1220 to 32767 (limited range) 3276.7 °F = 1802.6 °C	3232 to 20932	+50 °C to +1820 °C
	460	1148	3192	Underloading
	18240	32767	20972	Overloading
	32767	32767	32767	Line break, cold compensation error
Type N	-2000 to +13000	-3280 to 23720	4732 to 15732	-200 °C to +1300 °C
	-2040	-3352	692	Underloading
	13040	23792	15772	Overloading
	32767	32767	32767	Line break, cold compensation error
Type E	-2000 to +10000	-3280 to 18320	4732 to 12732	-200 °C to +1000 °C
	-2040	-3352	692	Underloading
	10040	18392	12772	Overloading
	32767	32767	32767	Line break, cold compensation error
Type R	-500 to +17680	-580 to +32144	3232 to 20412	-50 °C to +1768 °C
	-540	-652	2192	Underloading
	17720	32216	20452	Overloading
	32767	32767	32767	Line break, cold compensation error
Type S	-500 to +17680	-580 to +32144	3232 to 20412	-50 °C to +1768 °C
	-540	-652	2192	Underloading
	17720	32216	20452	Overloading
	32767	32767	32767	Line break, cold compensation error

Temperature measurement ranges UR20-4AI-TC-CJT-DIAG

Measurement range	Value in °C 0.1 ° resolution Bit significance	Value in °F 0.1 °F Bit significance	Value in K 0.1°K Bit significance	Range
Type T	-2000 to +4000	-3280 to 7520	732 to 6732	-200 °C to +400 °C
	-2040	-3352	692	Underloading
	4040	7592	6772	Overloading
	32767	32767	32767	Line break, cold compensation error
Type L	-2000 to +9000	-3280 to 16520	732 to 11732	-200 °C to +900 °C
	-2040	-3352	692	Underloading
	9040	16592	11772	Overloading
	32767	32767	32767	Line break, cold compensation error
Type U	-2000 to +6000	-3280 to 11120	732 to 8732	-200 °C to +600 °C
	-2040	-3352	692	Underloading
	6040	11192	8772	Overloading
	32767	32767	32767	Line break, cold compensation error
Type C	0 to 23150	320 to 32767 (limited range) 3276.7 °F = 1802.6 °C	2732 to 25882	0 to +2315 °C
	-40	248	2692	Underloading
	23190	32767	25922	Overloading
	32767	32767	32767	Line break, cold compensation error

Process alarm UR20-4AI-TC-CJT-DIAG

Name	Number of bytes	Function
High alarm	1	Bit 0: Upper limit exceeded channel 0
		Bit 1: Upper limit exceeded channel 1
		Bit 2: Upper limit exceeded channel 2
		Bit 3: Upper limit exceeded channel 3
		Bit 4 ... 7: Reserved
Low alarm	1	Bit 0: Lower limit underrun channel 0
		Bit 1: Lower limit underrun channel 1
		Bit 2: Lower limit underrun channel 2
		Bit 3: Lower limit underrun channel 3
		Bit 4 ... 7: Reserved
Timestamp	2	The two least significant bytes of the internal 32-bit timer

6.56 Analogue input module UR20-4AI-R-HS-16-DIAG

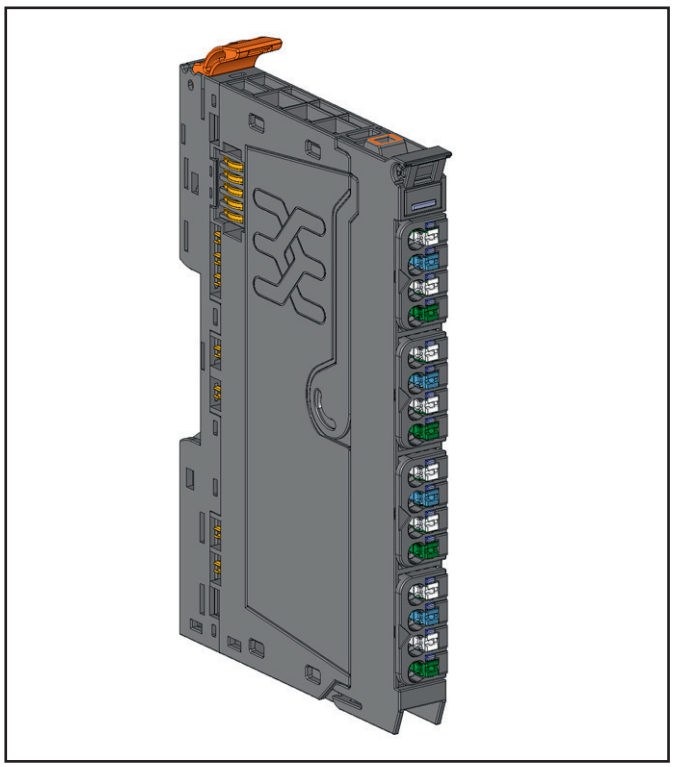

Analogue input module UR20-4AI-R-HS-16-DIAG (Item No. 2001670000)

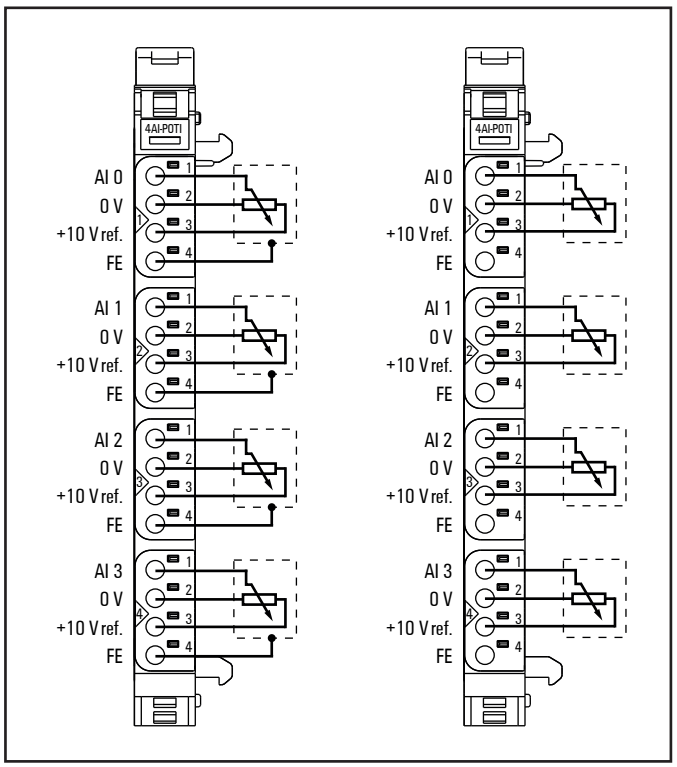

Connection diagram UR20-4AI-R-HS-16-DIAG

The analogue input module UR20-4AI-R-HS-16-DIAG is intended to be used for the purpose of position detection. One potentiometer (absolut encoder with resistance detection) using a resistance between 300 Ω and 50 kΩ can be connected to each of the 4 channels. The resolution is 16 bit per channel with a 0.25% accuracy of the full scale. The reference voltage is supplied by each channel via a safe 10 V output. The total output current of the module can be 200 mA at maximum.
A user specific calibration as well as a user specific scaling can be parameterised. When working with EtherCAT the high speed detection provides data to the fieldbus every 500 µs at maximum.
One potentiometer can be connected to each connector in a 3-wire or 3-wire connection +FE. A status LED is assigned to each channel. The module electronics supply the connected sensors with power from the input current path (I_{IN}).
The inputs are protected against voltage surges and overcurrent. Voltages that exceed ±30 V may cause the destruction of the module.
The module provides a limit value monitoring as well as single channel diagnosis with channel related error diagnostic and line break detection.

In order to avoid perturbation effects please use shielded analogue lines only.

Heat generation at the connected potentiometer depends on its resistance value. For example the heat loss of a 500 Ω potentiometer at 10 V feed-in will be 0.2 W.

Interruption of the power supply for less than 1 ms has no impact. In the case of longer interruptions the bus communication will be shut off.



	Module status LED Green: Communication over the system bus Red: Error
1.1	Red: Line break input 0
2.1	Red: Line break input 1
3.1	Red: Line break input2
4.1	Red: Line break input 3

LED indicators UR20-4AI-R-HS-16-DIAG, troubleshooting see Chapter 12

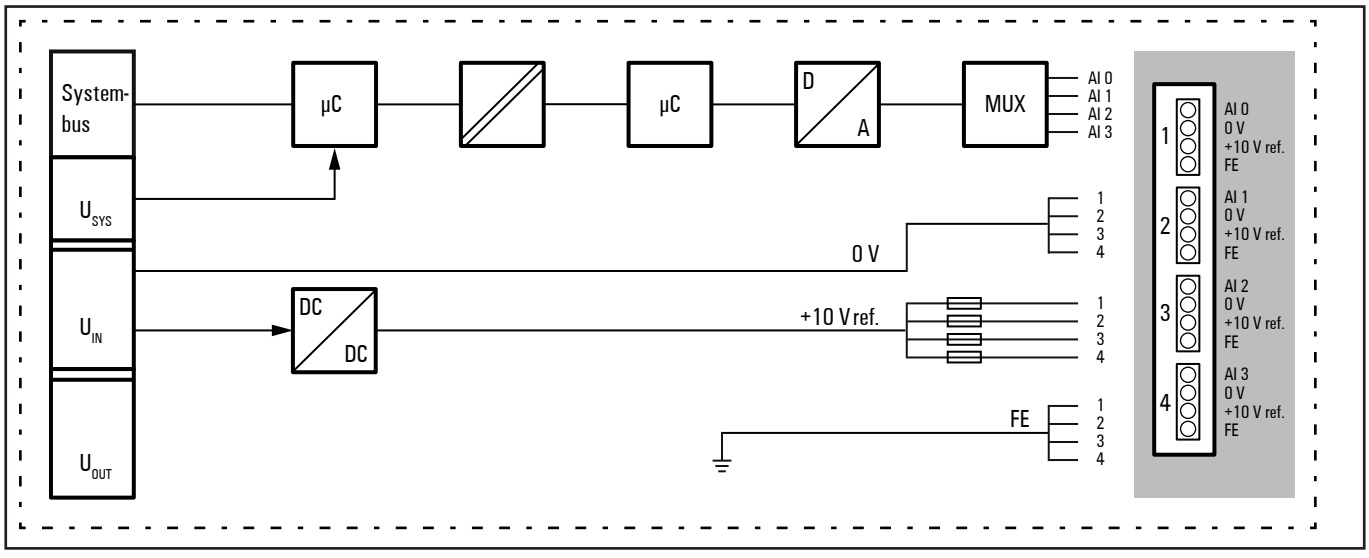

Block diagram UR20-4AI-R-HS-16-DIAG

Technical data UR20-4AI-R-HS-16-DIAG (Item No. 2001670000)

System data	
Data	Process, parameter and diagnostic data depend on the coupler used, see coupler description.
Interface	u-remote system bus
System bus transfer rate	48 Mbps
Inputs	
Number	4
Sensor connection	3-wire, 3-wire+FE
Input value	Ratiometric potentiometer analysis with own supply
Measuring range	300 Ω ... 50 kΩ
Conversion time	typ. 500 µs (typ. 625 µs at 50 Hz / typ. 521 µs at 60 Hz frequency suppression)
Resolution	16 Bit
Accuracy	< ±0.25% FSR at 25 °C
Temperature coefficient	50 ppm/K
Input resistance	typ. 500 kΩ against the wiper connection
Supply voltage for potentiometer	+10 V DC ±10%
Current of the supply voltage output	max. 0.05 A per channel, total 0.2 A
Line break detection	yes
Short-circuit-proof	yes
Module diagnosis	yes
Individual channel diagnosis	Line break detection slider (AI), overload and short circuit detection sensor supply
Supply	
Supply voltage	24 V DC +20%/-15%
Current consumption from system current path I_{SYS}	8 mA
Current consumption from input current path I_{IN}	26 mA
General data	
Weight (operational status)	87 g
For additional general data, see Section 3.4	

Overview of the editable parameters UR20-4AI-R-HS-16-DIAG

Channel	Description	Options[1)]	Default
	Frequency suppression	disabled (0) / 50 Hz (1) / 60 Hz (2)	disabled
0 ... 3	Input	disabled (0) / enabled (1)	disabled
0 ... 3	Potentiometer value kΩ	0 ... 50	10
0 ... 3	Channel diagnosis	disabled (0) / enabled (1)	disabled
0 ... 3	User calibration	disabled (0) / enabled (1)	disabled
0 ... 3	User calibration offset	-32768 ... 32767	0
0 ... 3	User calibration end value	0 ... 65535	32767
0 ... 3	User scaling	disabled (0) / enabled (1)	disabled
0 ... 3	User scaling offset	-32768 ... 32767	0
0 ... 3	User scaling faktor	32 Bit signed	65536
0 ... 3	Limit value monitoring	disabled (0) / enabled (1)	disabled
0 ... 3	High limit value	-32768 ... 32767	32767
0 ... 3	Low limit value	-32768 ... 32767	0

1) Values in brackets for Modbus-TCP (firmware version 02.00.00 and higher), CANopen, EtherCAT and EtherNet/IP via module parameter class

Adjusting the potentiometer value

► Open the parameter settings of the module in the web server.

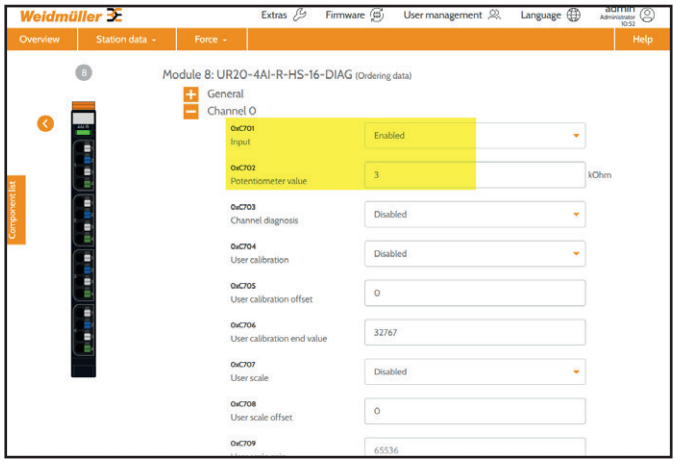

Display of parameters in the web server

► Adjust the potentiometer value to the value of the connected device. You can type in integer values between 0 and 50 kΩ. A smaller deviation will result in more accurate measuring values.
► Enable the input the potentiometer is connected with.
► Accept the changes.

The measured value will be displayed.

Enabling the user calibration

Exterior influences like long connection lines can have an impact on the accuracy of the measures. These influences can be compensated by a user specific calibration. Perform as follows to use this feature:

► Open the parameter settings of the module in the web server.

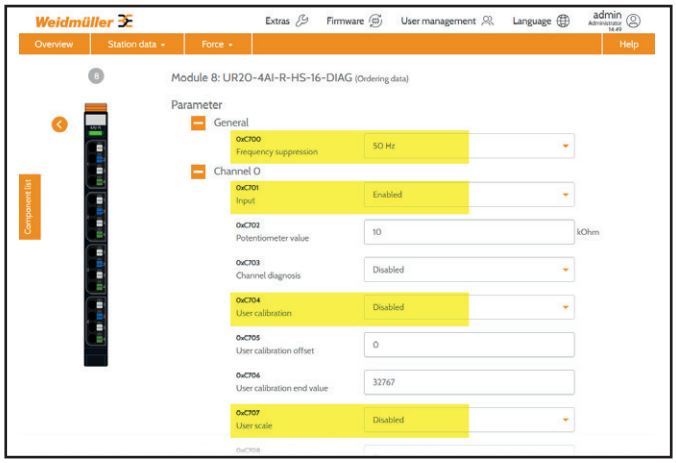

Setting the user specific calibration

► Enable the frequency suppression.
► Enable the input the potentiometer is connected with.
► Disable the parameters „User calibration“ and „User scaling“.
► Turn the potentiometer to the lower limit stop.
► Type in the value displayed in the field „User calibration Offset“.
► Turn the potentiometer to the upper limit stop.
► Type in the value displayed in the field „User calibration end value“.
► Enable the parameter „User calibration“.

Setting the user scaling

As a default the current potentiometer value is displayed in percent with the following decimal and hexadecimal values.

Scale	decimal (D)	hexadecimal
100%	32767	0x7FFF
0%	0	0X0000

The user scaling allows you to adapt the measuring results to your individual situation. Therefore you can set an offset value and a factor to influence the gradient of the measuring curve.

$$\text{Scaled value} = \text{Offset} + \frac{\text{Process value x gradient}}{2^{16}}$$

► Open the parameter settings of the module in the web server.

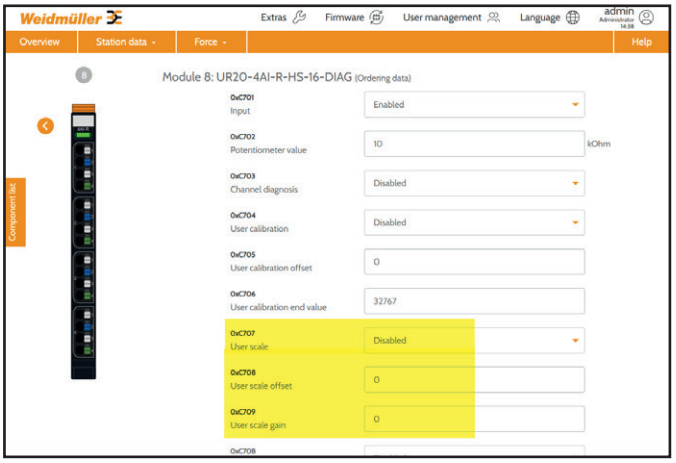

Setting the user scaling

► Enable the input the potentiometer is connected with.
► Type in the values for the offset and the line shift.
► Enable the parameter „User scaling“.
► Accept the changes.

Diagnosis data UR20-4AI-R-HS-16-DIAG

Name	Byte	Bit	Description	Default
Error indicator	0	0	Module error	
		1	Internal error	
		2	External error	
		3	Channel error	0
		4	Error	
		5	Reserved	0
		6	Reserved	0
		7	Parameter error	
Module types	1	0	Module Type 0x05	
		1		
		2		
		3		
		4	Reserved	1
		5	Reserved	0
		6	Reserved	0
		7	Reserved	0
Error byte 2	2	0 ... 7	Reserved	0
Error byte 3	3	0 ... 2	Reserved	0
		3	Internal diagnostic FIFO full	
		4	Power supply fault	0
		5	Reserved	0
		5	Reserved	0
		7	Reserved	0
Channel type	4	0	Channel type 0x74	0
		1		0
		2		1
		3		0
		4		1
		5		1
		6		1
		7	Reserved	0
Diagnostic bits per channel	5		Number of diagnostic bit per channel	8
Number of channels	6		Number of similar channels per module	4
Channel error	7	0	Error at channel 0	0
		1	Error at channel 1	0
		2	Error at channel 2	0
		3	Error at channel 3	0
		4 ... 7	Reserved	0
	8 ... 10	8 ... 31	Reserved	0
Channel 0 error	11	0	Parameter Error	0
		1	Reserved	0
		2	Reserved	0
		3	Short circuit sensor supply	0
		4	Line break	0
		5	Process alarm lost	0
		6 ... 7	Reserved	0

Diagnosis data UR20-4AI-R-HS-16-DIAG

Name	Byte	Bit	Description	Default
Channel 1 error	12	0	Parameter Error	0
		1	Reserved	0
		2	Reserved	0
		3	Short circuit sensor supply	0
		4	Line break	0
		5	Process alarm lost	0
		6 ... 7	Reserved	0
Channel 2 error	13	0	Parameter Error	0
		1	Reserved	0
		2	Reserved	0
		3	Short circuit sensor supply	0
		4	Line break	0
		5	Process alarm lost	0
		6 ... 7	Reserved	0
Channel 3 error	14	0	Parameter Error	0
		1	Reserved	0
		2	Reserved	0
		3	Short circuit sensor supply	0
		4	Line break	0
		5	Process alarm lost	0
		6 ... 7	Reserved	0
Channel 4 error to Channel 31 error	15 ... 42	0 ... 7	Reserved	0
Time stamp	43-46		time stamp [µs] (32bit)	

Process data[1] inputs UR20-4AI-R-HS-16-DIAG

Byte	Format	Description
IB0	Word	AI0
IB1		
IB2	Word	AI1
IB3		
IB4	Word	AI2
IB5		
IB6	Word	AI3
IB7		

1) Resolution 2^{16-1}

The voltage is being measured at the wiper contact. The process data provide the current potentiometer value relative to the reference voltage (0 to 100%)

Process alarm UR20-4AI-R-HS-16-DIAG

Name	Number of bytes	Function
High alarm	1	Bit 0: Upper limit exceeded channel 0
		Bit 1: Upper limit exceeded channel 1
		Bit 2: Upper limit exceeded channel 2
		Bit 3: Upper limit exceeded channel 3
		Bit 4 – 7: Reserved
Low Alarm	1	Bit 0: Lower limit underrun channel 0
		Bit 1: Lower limit underrun channel 1
		Bit 2: Lower limit underrun channel 2
		Bit 3: Lower limit underrun channel 3
		Bit 4 – 7: Reserved
Timestamp	2	The two least significant bytes of the internal 32-bit timer

6.57 Analogue input module UR20-4AI-I-HART-16-DIAG

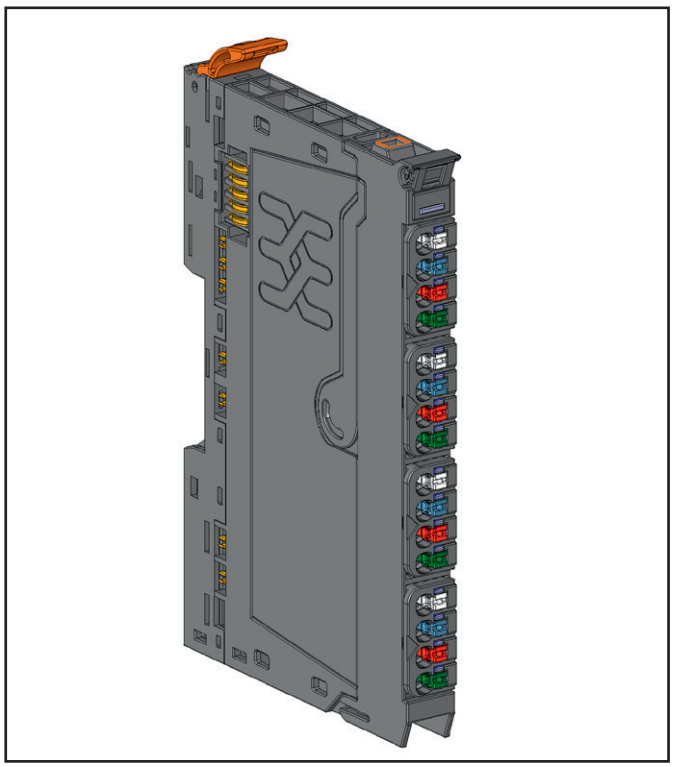

Analogue input module UR20-4AI-I-HART-16-DIAG (Order No. 2617520000)

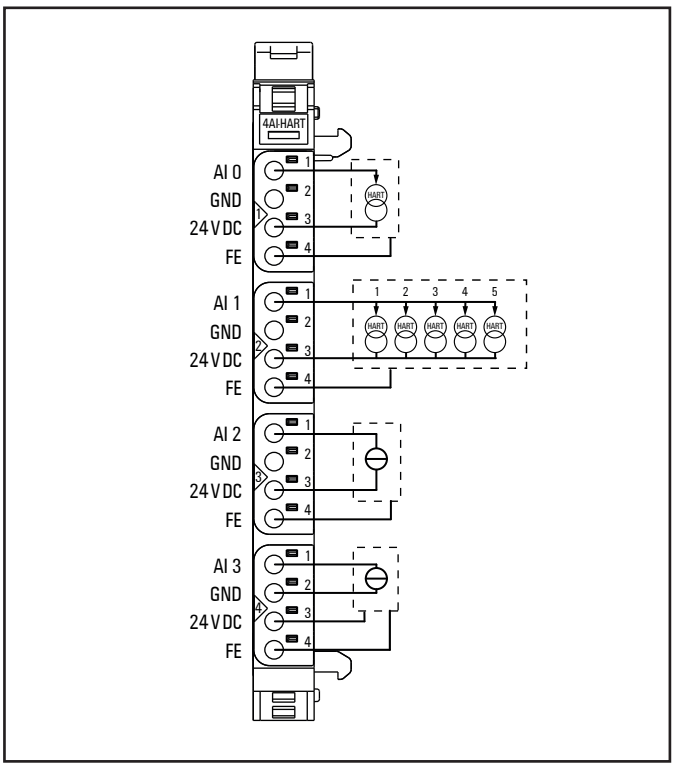

Connection diagram UR20-4AI-I-HART-16-DIAG showing several variants

Connector	Channel	Connection variant
1	0	HART P2P connection (short address 0) loop powered by module electronics
2	1	HART multidrop connection (short address 1 to 5) loop powered by module electronics
3	2	2-wire sensor loop powered by module electronics
4	3	3/4-wire sensor with signal wiring and sensor supply via module electronics

The UR20-4AI-I-HART-16-DIAG analogue input module can record up to 4 analogue sensors with 0 ... 20 mA or 4 ... 20 mA. The resolution is 16 bit per channel. Sensors can be connected to each connector in a 2-wire, 3-wire or 4-wire connection.

The module can be used as a HART master with a dedicated HART modem per channel. HART devices can be connected to any channel in single connection (point-to-point, P2P) or multiple connection (multidrop). Up to five HART devices can be connected in multidrop mode (short address 1-5). No device in the multidrop chain is allowed to operate in P2P mode (short address 0).

The measurement range as well as the HART function is defined using parameterisation. Two status LED are assigned to each channel. The module electronics supply the connected sensors with power from the input current path (I_{IN}).

Each sensor output is loadable with 500 mA and protected against overcurrent. The inputs are protected against voltage surges and overcurrent. Voltages that exceed ±30 V may cause the destruction of the module.

The individual channels are galvanically separated from the system bus. The module provides individual channel diagnosis with channel related error messages.

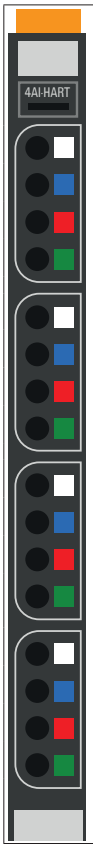

	Module status LED Green: Communication over the system bus Red: Error
1.1	Red: channel error, Yellow: HART communication
1.3	Red: +24 V short circuit or line break AI (with current < 1.2 mA)
2.1	Red: channel error, Yellow: HART communication
2.3	Red: +24 V short circuit or line break AI (with current < 1.2 mA)
3.1	Red: channel error, Yellow: HART communication
3.3	Red: +24 V short circuit or line break AI (with current < 1.2 mA)
4.1	Red: channel error, Yellow: HART communication
4.3	Red: +24 V short circuit or line break AI (with current < 1.2 mA)

LED indicators UR20-4AI-I-HART-16-DIAG , troubleshooting see Chapter 12

Compatible UR20 fieldbus coupler

Fieldbus coupler	Reading HART device data	Writing HART device parameters
UR20-FBC-PB-DP	–	–
UR20-FBC-PB-DP-V2	x	–
UR20-FBC-PN-IRT	–	–
UR20-FBC-PN-IRT-V2	x	–
UR20-FBC-EC	x[1)]	–
UR20-FBC-MOD-TCP-V2	x	x[2)]
UR20-FBC-EIP	x[1)]	–
UR20-FBC-EIP-V2	x	–
UR20-FBC-DN	–	–
UR20-FBC-CAN	–	–
UR20-FBC-PL	–	–
UR20-FBC-IEC61162-450	–	–
UR20-FBC-CC	–	–
UR20-FBC-CC-TSN	–	–
UR20-FBC-PN-ECO	–	–
UR20-FBC-EC-ECO	–	–
UR20-FBC-MOD-TCP-ECO	–	–

1) only with hardware- version 02.00.00 or higher
2) via DTM software

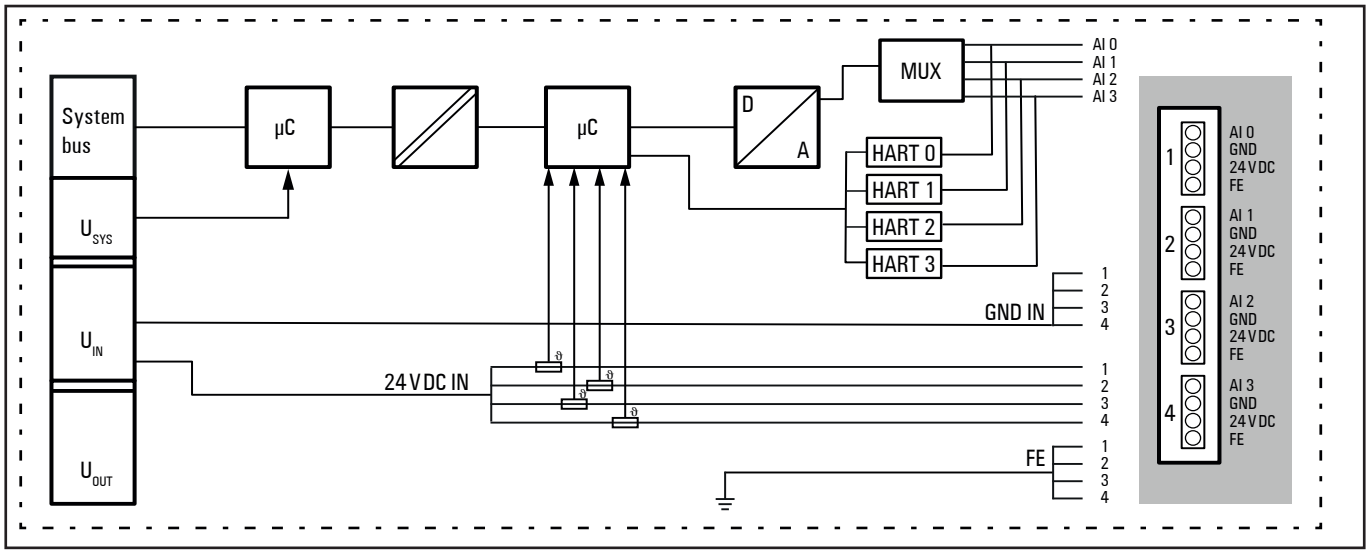

Block diagram UR20-4AI-I-HART-16-DIAG

Associated Device Type Managers (DTMs) are available for the following products:
- UR20-FBC-MOD-TCP-V2 (2476450000)
- UR20-4AI-I-HART-16-DIAG (2617520000)
- UR20-4AI-I-HART-ISO-16 (2828350000)

The DTMs are parts of the WI Manager software. You can download the software from the product catalogue (Download in the product description of the HART module).

When communicating with the UR20-FBC-MOD-TCP-V2, the WI Manager acts as a Modubs-TCP master, which does not support any extended functions of the UR20 coupler. Therefore the coupler should only be operated in factory settings. In particular, the coupler parameter **Modbus Watchdog** must be deactivated (parameter value = **0**).

For stable HART communication, it is recommended to use compliance-tested HART sensors.

Technical data UR20-4AI-I-HART-16-DIAG (Order No. 2617520000)

System data		
Data	Process, parameter and diagnostic data depend on the coupler used, see the table in Section 4.11.	
Interface	u-remote system bus	
System bus transfer rate	48 Mbps	
Inputs		
Number	4	
Input values	Current (0 ... 20 mA, 4 ... 20 mA, 4 ... 20 mA HART)	
HART Communication Protocol	Revision 5 to Revision 7	
Resolution	16 bits	
Accuracy	max. 0,1 % FSR ±50 ppm/K max.	at 25 °C Temperature coefficient
Sensor supply	max. 0,5 A per plug	
Sensor connection	2-wire, 3-wire, 4-wire	
Conversion time	max. 1 ms all 4 channels per cycle, asynchronously sampled	
Limiting frequency	Normal mode: 500 Hz HART mode: 25 Hz	
Internal resistance	250 Ω	
Reverse polarity protection	yes	
Module diagnosis	yes	
Individual channel diagnosis	yes	
Supply		
Supply voltage	24 V DC +20 %/-15 %	
Current consumption from system current path I_{SYS}	8 mA	
Current consumption from input current path I_{IN}	27 mA + sensor supply current	
General data		
Weight (operational status)	90,0 g	
For additional general data, see Section 3.4		

Overview of the editable parameters UR20-4AI-I-HART-16-DIAG

channel	Description	Options[1)]	Default
	Frequency suppression	disabled (0) / 50 Hz (1) / 60 Hz (2) / Average over 16 values (3) / 2 Hz low pass (4)	disabled
	Device auto recovery[2)]	disabled (0) / enabled (1)	enabled
	HART retry factor	0 (0) / 3 (1) / 5 (2) / 10 (3)	3
	HART start up time	1 sec. (0) / 2 sec. (1) / 4 sec. (2) / 8 sec. (3)	1 sec.
0 ... 3	Data format	S5 Data format (0) / S7 Data format (1)	S7 Data format
0 ... 3	channel diagnosis	disabled (0) / enabled (1)	disabled
0 ... 3	Diag short circuit 24 V	disabled (0) / enabled (1)	disabled
0 ... 3	Diag line break AI	disabled (0) / enabled (1)	disabled
0 ... 3	Diag HART	disabled (0) / enabled (1)	disabled
0 ... 3	Measurement range	0 to 20 mA (0) / 4 to 20 mA (1) / HART P2P (2) / HART multidrop (3) / disabled (4)	disabled

1) Values in brackets for Modbus-TCP (firmware version 02.00.00 and higher), CANopen, EtherCAT and EtherNet/IP via module parameter class
2) Device auto recovery may not work as expected if the device requires specific power up sequence before replying to HART commands.

Diagnostic data UR20-4AI-I-HART-16-DIAG

Name	Byte	Bit	Description	Default
Error indicator	0	0	Module error	0
		1	Internal error	0
		2	External error	0
		3	channel error	0
		4	Error	0
		5	Power supply fault	0
		6	Reserved	0
		7	Parameter error	0
Module type	1	0	Module type	0x05
		1		
		2		
		3		
		4	channel information available	1
		5	Reserved	0
		6	Reserved	0
		7	Reserved	0
Error byte 2	2	0 ... 7	Reserved	0
Error byte 3	3	0 ... 2	Reserved	0
		3	Internal diagnostic FIFO full	0
		4	Power supply fault	0
		5 ... 7	Reserved	0
channel type	4	0 ... 6	channel type	0x74
		7	Reserved	0
Diagnostic bits per channel	5		Number of diagnostic bit per channel	8
Number of channels	6		Number of similar channels per module	4
channel error	7	0	Error at channel 0	0
		1	Error at channel 1	0
		2	Error at channel 2	0
		3	Error at channel 3	0
		4 ... 7	Reserved	0
channel error	8	8 ... 15	Reserved	0
channel error	9	16 ... 23	Reserved	0
channel error	10	24 ... 31	Reserved	0
channel 0 error	11	0	Parameter Error	0
		1	Overload	0
		2	Reserved	0
		3	External short-circuit	0
		4	Line break AI	0
		5	HART diagnosis	0
		6	Lower limit exceeded	0
		7	Upper limit exceeded	0

Diagnostic data UR20-4AI-I-HART-16-DIAG

Name	Byte	Bit	Description	Default
channel 1 error	12	0	Parameter Error	0
		1	Overload	0
		2	Reserved	0
		3	External short-circuit	0
		4	Line break AI	0
		5	HART diagnosis	0
		6	Lower limit exceeded	0
		7	Upper limit exceeded	0
channel 2 error	13	0	Parameter Error	0
		1	Overload	0
		2	Reserved	0
		3	External short-circuit	0
		4	Line break AI	0
		5	HART diagnosis	0
		6	Lower limit exceeded	0
		7	Upper limit exceeded	0
channel 3 error	14	0	Parameter Error	0
		1	Overload	0
		2	Reserved	0
		3	External short-circuit	0
		4	Line break AI	0
		5	HART diagnosis	0
		6	Lower limit exceeded	0
		7	Upper limit exceeded	0
channel 4 error to channel 31 error	15 ... 42	0 ... 7	Reserved	0
Time stamp	43-46		time stamp [µs] (32bit)	

A diagnosis is indicated when a diagnosis limit value has been exceeded.

Diagnosis limit values

Measurement range	Lower limit	Upper limit
0 ... 20 mA	-	21 mA
4 ... 20 mA	3.6 mA	21 mA

Process data[1] outputs UR20-4AI-I-HART-16-DIAG

Byte	Format	Description
QB0	BYTE	Reserved
QB1	BYTE	Register address
QB2	BYTE	Reserved
QB3	BYTE	Reserved
QB4	BYTE	Reserved
QB5	BYTE	Reserved
QB6	BYTE	Reserved
QB7	BYTE	Reserved
QB8	BYTE	Reserved
QB9	BYTE	Reserved
QB10	BYTE	Reserved
QB11	BYTE	Reserved
QB12	BYTE	Reserved
QB13	BYTE	Reserved
QB14	BYTE	Reserved
QB15	BYTE	Reserved

1) Internal mapping of process data with data format „standard". Bytes and/or Words might be switched during data transfer depending on the fieldbus specification and the data format of the communicating fieldbus components.

Register addresses to input in QB1 for the display in IB10 ... IB15

Register no.	Description	Remark
0	Channel 0 HART sensor 1: status	
1	Channel 0 HART sensor 1: long HART address	
2	Channel 0 HART sensor 1: current	
3	Channel 0 HART sensor 1: Primary Value	
4	Channel 0 HART sensor 1: Secondary Value	
5	Channel 0 HART sensor 1: Tertiary Value	
6	Channel 0 HART sensor 1: Quaternary Value	
7	Reserved	
8	Reserved	
9	Reserved	
10 ... 19	Channel 0 HART sensor 2	as sensor 1
20 ... 29	Channel 0 HART sensor 3	as sensor 1
30 ... 39	Channel 0 HART sensor 4	as sensor 1
40 ... 49	Channel 0 HART sensor 5	as sensor 1
50 ... 99	Channel 1	as channel 0
100 ... 149	Channel 2	as channel 0
150 ... 199	Channel 3	as channel 0
200 ... 255	Reserved	

Process data[1] inputs UR20-4AI-I-HART-16-DIAG

Byte	Bit	Format	Description
IB0		WORD	AI0
IB1			
IB2		WORD	AI1
IB3			
IB4		WORD	AI2
IB5			
IB6		WORD	AI3
IB7			
IB8	0	BOOLEAN	CH 0: HART status polling
	1	BOOLEAN	CH 1: HART status polling
	2	BOOLEAN	CH 2: HART status polling
	3	BOOLEAN	CH 3: HART status polling
	4	BOOLEAN	CH 0: HART communication error
	5	BOOLEAN	CH 1: HART communication error
	6	BOOLEAN	CH 2: HART communication error
	7	BOOLEAN	CH 3: HART communication error
IB9	0	BOOLEAN	Reserved
	1	BOOLEAN	Reserved
	2	BOOLEAN	Reserved
	3	BOOLEAN	Register reading break
	4	BOOLEAN	CH 0: HART communication
	5	BOOLEAN	CH 1: HART communication
	6	BOOLEAN	CH 2: HART communication
	7	BOOLEAN	CH 3: HART communication
IB10 ... IB15		variable	depends on the value set in QB1

1) Internal mapping of process data with data format „standard". Bytes and/or Words might be switched during data transfer depending on the fieldbus specification and the data format of the communicating fieldbus components.

Displays in IB10 ... IB15 according to the value set in QB1

Byte	Format	Selection in QB1		
		Status	Long HART address	Current/PV/ SV/TV/QV
IB10	BYTE	Register no.	Register-Nr.	Register-Nr.
IB11	BYTE	HART Port status	Long address Byte 0	Unit
IB12	DWORD	HART communication status	Long address Byte 1	Floating point byte 0
IB13		HART device status	Long address Byte 2	Floating point byte 1
IB14		Reserved	Long address Byte 3	Floating point byte 2
IB15		Reserved	Long address Byte 4	Floating point byte 3

Register communication in process data

If the UR20-4AI-I-HART-16-DIAG module is used together with a HART sensor, each channel of the module can work either in Point-to-point (P2P) HART mode or in Multidrop mode. With P2P mode only one HART sensor is monitored, with Multidrop mode up to five HART sensors can be monitored.

Register structure

Each HART sensor can induce up to four HART variables:
PV = Primary Value
SV = Secondary Value
TV = Tertiary Value
QV = Quaternary Value

These additional values consist of 5 Bytes each. Byte 1 indicates the unit of the physical dimension, the following four Bytes display the 4-Byte value in data type FLOATING POINT according to IEEE 754.
The additional process data of the single HART variables are filed internally in 256 registers (see table register addresses to input in QB1 for the display in IB10 ... IB15).



In the case of a faulty access, bit IB9.3 is set.

Measurement ranges UR20-4AI-I-HART-16-DIAG, parameter Diag line break AI disabled

Measurement range	Current (I)	Decimal (D)	Hexadecimal	Range	Conversion
0 – 20 mA Siemens S7 format	23,52 mA	32511	0x7EFF	Overloading	D = 27648 x I / 20 I = D x 20 =/ 27648
	20 mA	27648	0x6C00	Nominal range	
	10 mA	13824	0x3600		
	0 mA	0	0x0000		
0 – 20 mA Siemens S5 format	23,52 mA	19268	0x4B44	Overloading	D = 16384 x I / 20 I = D x 20 / 16384
	20 mA	16384	0x4000	Nominal range	
	10 mA	8192	0x2000		
	0 mA	0	0x0000		
4 – 20 mA Siemens S7 format	22,81 mA	32511	0x7EFF	Overloading	D = 27648 x (I – 4) / 16 I= D x 16 / 27648 + 4
	20 mA	27648	0x6C00	Nominal range	
	12 mA	13824	0x3600		
	4 mA	0	0x0000		
	1,19 mA	-4864	0xED00	Underloading	
4 – 20 mA Siemens S5 format	22,82 mA	19268	0x4B44	Overloading	D = 16384 x (I – 4) / 16 I = D x 16 / 16384 + 4
	20 mA	16384	0x4000	Nominal range	
	12 mA	8192	0x2000		
	4 mA	0	0x0000		
	0,8 mA	-3277	0xF333	Underloading	

Measurement ranges UR20-4AI-I-HART-16-DIAG , parameter Diag line break AI enabled

Measurement range	Current (I)	Decimal (D)	Hexadecimal	Range	Conversion
0 ... 20 mA Siemens S7-Format	23,52 mA	32511	0x7EFF	Overloading	D = 27648 x I / 20 I = D x 20 =/ 27648
	20 mA	27648	0x6C00	Nominal range	
	10 mA	13824	0x3600		
	1,30 mA	1797	0x0705		
	1,20 mA	1659	0x067A	Line break	
0 ... 20 mA Siemens S5-Format	23,52 mA	19268	0x4B44	Overloading	D = 16384 x I / 20 I = D x 20 / 16384
	20 mA	16384	0x4000	Nominal range	
	10 mA	8192	0x2000		
	1,30 mA	1065	0x0428		
	1,20 mA	983	0x03D7	Line break	
4 ... 20mA Siemens S7-Format	22,81 mA	32511	0x7EFF	Overloading	D = 27648 x (I - 4) / 16 I= D x 16 / 27648 + 4
	20 mA	27648	0x6C00	Nominal range	
	12 mA	13824	0x3600		
	4 mA	0	0x0000		
	3,60 mA	-691	0xFD4D	Underloading	
	1,30 mA	-4666	0xEDC7		
	1,20 mA	-4838	0xED1A	Line break	
4 ... 20 mA Siemens S5-Format	22,82 mA	19268	0x4B44	Overloading	D = 16384 x (I - 4) / 16 I = D x 16 / 16384 + 4
	20 mA	16384	0x4000	Nominal range	
	12 mA	8192	0x2000		
	4 mA	0	0x0000		
	3,60 mA	-410	0xFE67	Underloading	
	1,30 mA	-2765	0xF534		
	1,20 mA	-2867	0xF4CD	Line break	

The input value 0x7FFF is displayed in the case of undervoltage.

The following applies for all S7 ranges:
input value > overload range = 0x7FFF
input value < underload range = 0x8000
Additional status bits are set for S5.

Digital measured value representation in Siemens S5 format

Data bit	7	6	5	4	3	2	1	0
Byte 0 (High Byte)	2^{12}	2^{11}	2^{10}	2^{9}	2^{8}	2^{7}	2^{6}	2^{5}
Byte 1 (low byte)	2^{4}	2^{3}	2^{2}	2^{1}	2^{0}	A	F	O

A: 0 = not active
1 = active
F: 0 = no line break
1 = line break
O: 0 = 0 to 4095 units
1 = ±4096 units (overflow)
Representation in two's complement
2^{12} = VZ in representation as amount and signs

HART commands

In the startup phase the HART master module will send HART command #0 for scanning the connected HART devices. In operation mode the HART master module cyclically sends HART command #3 for process data scanning of the connected HART devices.
Details of the HART commands #0 and #3 are shown in the table below.
Additional HART commands can be sent to connected HART devices via acyclic commands to the HART master.



For proper operation, make sure that acyclic commands are sent only from a single host at a time.

HART commands sent by HART master module

Command No.	Description	Format	Command type	Device
#0	HART protocol	Byte	U - by request (load, read when init)	any
	Software revision	Byte	U - by request (load, read when init)	any
	Hardware revision	Byte	U - by request (load, read when init)	any
	SensorNo	Byte	U - by request (load, read when init)	any
#3	Primary variable	Real	U - live value (loop current in mA)	any
	Primary variable	Real	U - live value	any
	PV unit	Byte	U - live value	any
	Secondary variable	Real	U - live value	any
	SV unit	Byte	U - live value	any
	Third variable	Real	U - live value	any
	TV unit	Byte	U - live value	any
	Fourth variable	Real	U - live value	any
	FV unit	Byte	U - live value	any
	Error code	Integer	U - live value	any

Configuration with Device Type Manager (DTM)

The following description shows the configuration with the Weidmüller Integration Manager (WI-Manager) as FDT frame application. For the configuration, the following software is required:

- Weidmüller Integration Manager (WI-Manager)
- DTM for UR20-FBC-MOD-TCP-V2
- DTM for UR20-4AI-I-HART-16-DIAG

You can download the software from the product catalogue (Download in the product description of the HART module).

Before you start the configuration, the following requirements must be fulfilled:

- The u-remote station is completely assembled and wired up.
- The u-remote station is connected to a PC or laptop via USB or Ethernet.
- The SW Weidmueller DTM-Library Setup software is installed.
- The DTM of the connected sensor was downloaded from the vendor's website and is installed.
- An IP address is assigned and the Modbus transport protocol **TCP** is selected in the coupler parameters via the web server.

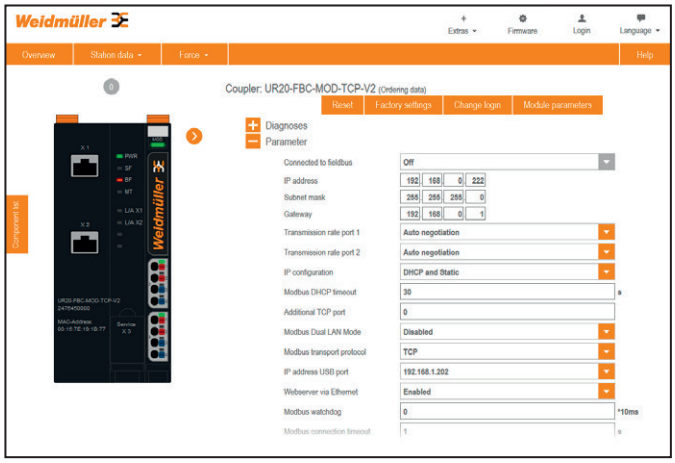

Component view for the UR20-FBC-MOD-TCP-V2 coupler in the webserver

- ► Open an empty project in the WI-Manager.
- ► If not already done when opening the WI-Manager: Update the device catalogue.
- ► Add the **MODBUS-TCP-COM-WI** DTM from the communication category to the network view.

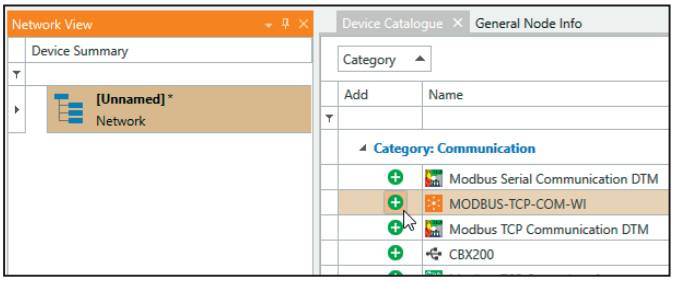

Adding the MODBUS-TCP-COM-WI DTM to the network view

- ► Add the **UR20-FBC-MOD-TCP-V2** DTM from the gateway category to the network view.
- ► If you are connected via Ethernet, set the IP address of the Ethernet interface and click **OK**.

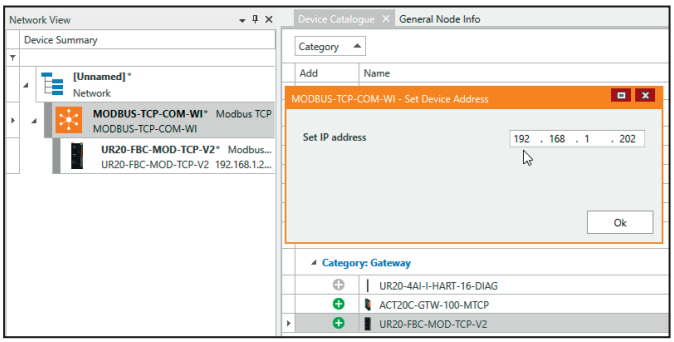

Setting the IP address of the Ethernet interface

- ► Add the **UR20-4AI-I-HART-16-DIAG** DTM from the gateway category to the network view.
- ► Set the module slot number and click **OK**.

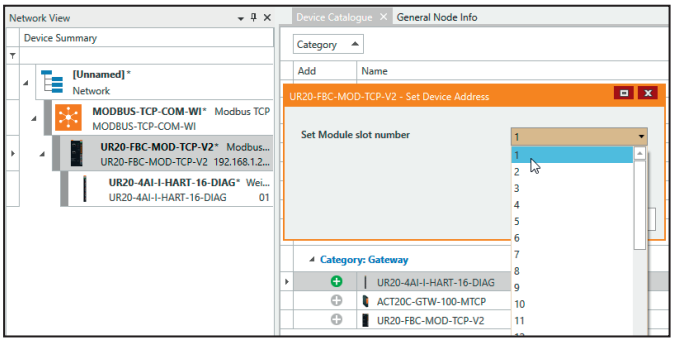

Setting the module slot number

- ► Add the DTM of the connected sensor from the device category to the network view.
- ► Select the channel to which the sensor is connected and click **OK**.

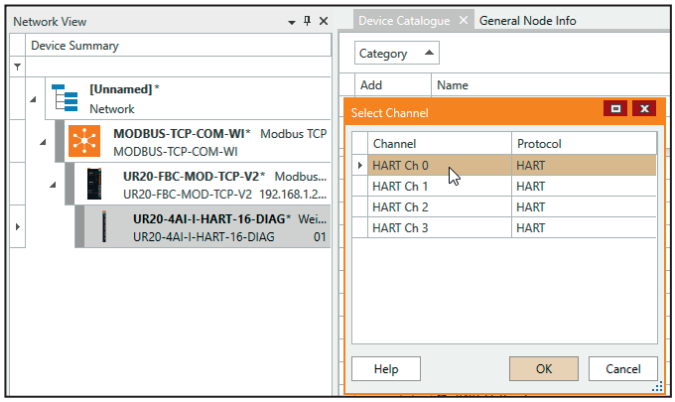

Selecting the channel of the connected sensor

► Set the short address of the HART device and click **OK**.

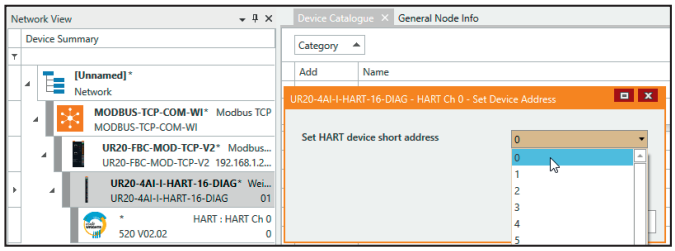

Setting the short address of the HART device

► Save the project.

By double-clicking on a DTM in the network view, you can now parameterise each device online or offline and use further FDT-specified functions, e. g. **Diagnosis** or **Observe**.

6.58 Analogue input module UR20-4AI-I-HART-ISO-16

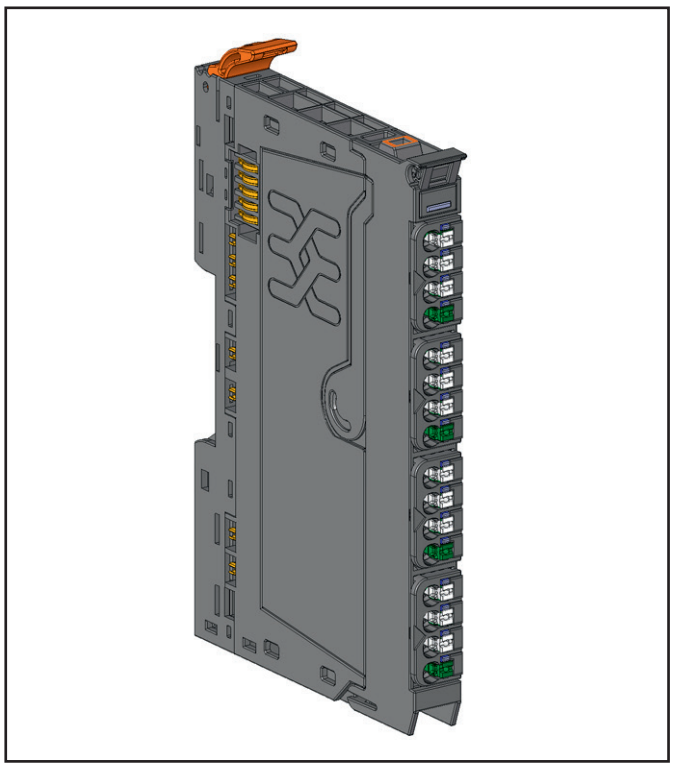

Analogue input module UR20-4AI-I-HART-ISO-16 (Order No. 2828350000)

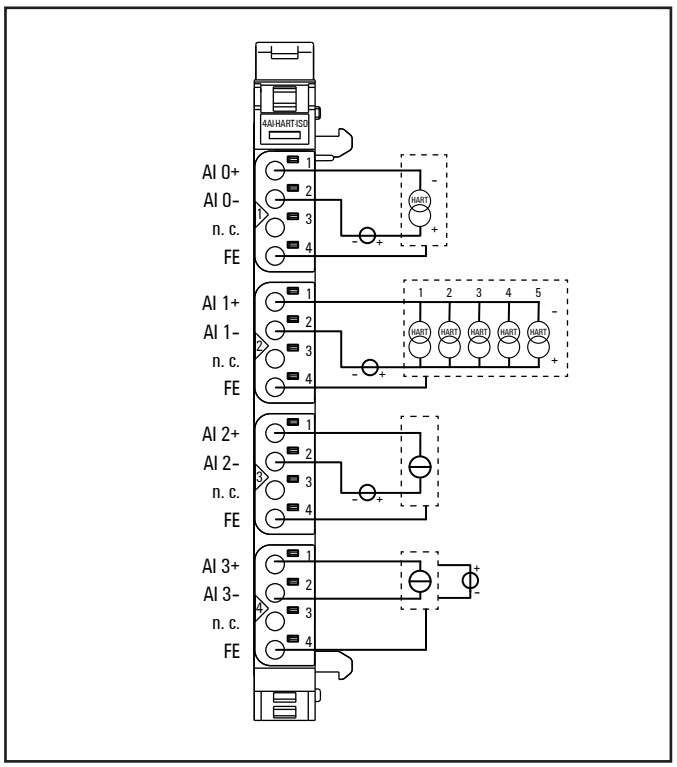

Connection diagram UR20-4AI-I-HART-ISO-16 showing several variants

The UR20-4AI-I-HART-ISO-16 analogue input module can record up to 4 analogue sensors with 0 ... 20 mA or 4 ... 20 mA. The resolution is 16 bit per channel. Sensors can be connected to each connector in a 2-wire or 2-wire connection +FE.

The module can be used as a HART master with a dedicated HART modem per channel. HART devices can be connected to any channel in single connection (point-to-point, P2P) or multiple connection (multidrop). Up to five HART devices can be connected in multidrop mode (short address 1-5). No device in the multidrop chain is allowed to operate in P2P mode (short address 0).

The measurement range as well as the HART function is defined using parameterisation. Two status LED are assigned to each channel.

The inputs are protected against voltage surges and overcurrent. Voltages that exceed ±30 V may cause the destruction of the module.

The individual channels are galvanically separated from the system bus and from other channels. The module provides individual channel diagnosis with channel related error messages. The module has no auxiliary voltage outputs. Connected sensors must be supplied externally.

Connector	Channel	Connection variant
1	0	HART P2P connection (short address 0) loop powered by external sensor supply
2	1	HART multidrop connection (short address 1 to 5) loop powered by external sensor supply
3	2	2-wire sensor loop powered by external sensor supply
4	3	3/4-wire sensor with signal wiring via module electronics and external sensor supply

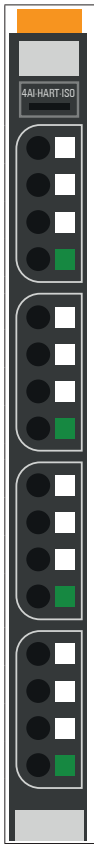

	Module status LED Green: Communication over the system bus Red: Error
1.1	Red: channel error
1.3	Yellow: HART communication
2.1	Red: channel error
2.3	Yellow: HART communication
3.1	Red: channel error
3.3	Yellow: HART communication
4.1	Red: channel error
4.3	Yellow: HART communication

LED indicators UR20-4AI-I-HART-ISO-16 , troubleshooting see Chapter 12

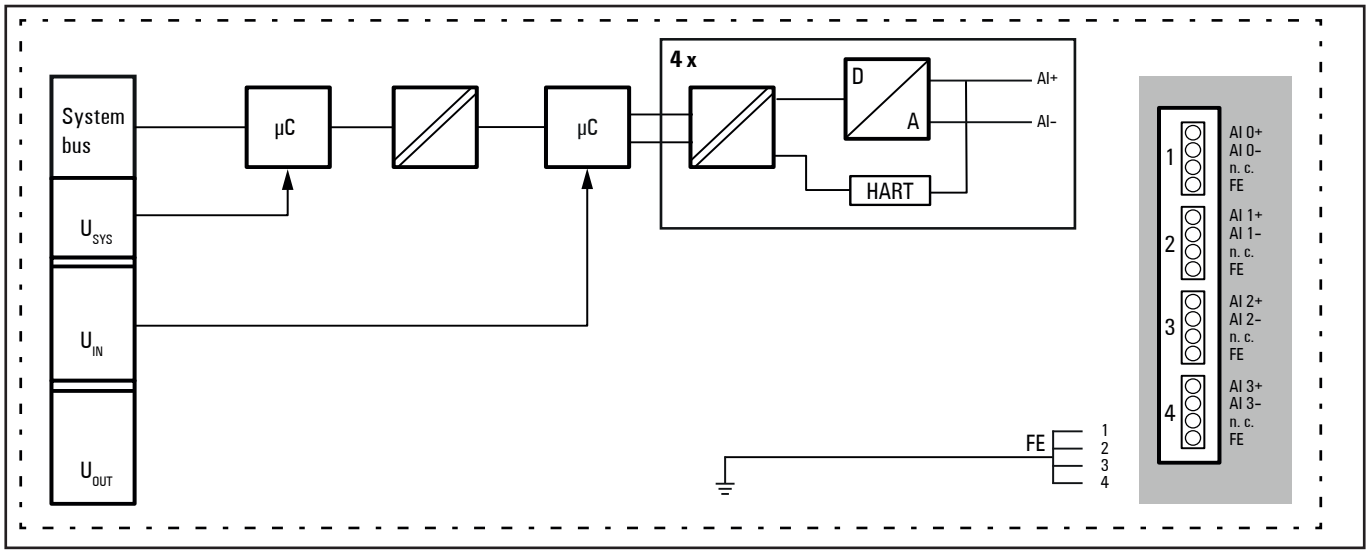

Block diagram UR20-4AI-I-HART-ISO-16

Compatible UR20 fieldbus coupler

Fieldbus coupler	Reading HART device data	Writing HART device parameters
UR20-FBC-PB-DP	–	–
UR20-FBC-PB-DP-V2	x	–
UR20-FBC-PN-IRT	–	–
UR20-FBC-PN-IRT-V2	x	–
UR20-FBC-EC	x[1)]	–
UR20-FBC-MOD-TCP-V2	x	x[2)]
UR20-FBC-EIP	x[1)]	–
UR20-FBC-EIP-V2	x	–
UR20-FBC-DN	–	–
UR20-FBC-CAN	–	–
UR20-FBC-PL	–	–
UR20-FBC-IEC61162-450	–	–
UR20-FBC-CC	–	–
UR20-FBC-CC-TSN	–	–
UR20-FBC-PN-ECO	–	–
UR20-FBC-EC-ECO	–	–
UR20-FBC-MOD-TCP-ECO	–	–

1) only with hardware- version 02.00.00 or higher
2) via DTM software

Associated Device Type Managers (DTMs) are available for the following products:
- UR20-FBC-MOD-TCP-V2 (2476450000)
- UR20-4AI-I-HART-ISO-16 (2828350000)
- UR20-4AI-I-HART-16-DIAG (2617520000)

The DTMs are parts of the WI Manager software. You can download the software from the product catalogue (Download in the product description of the HART module).

When communicating with the UR20-FBC-MOD-TCP-V2, the WI Manager acts as a Modbus-TCP Client, which does not support any extended functions of the UR20 coupler. Therefore the coupler should only be operated in factory settings. In particular, the coupler parameter **Modbus Watchdog** must be deactivated (parameter value = **0**).

For stable HART communication, it is recommended to use compliance-tested HART sensors.

Technical data UR20-4AI-I-HART-ISO-16 (Order No. 2828350000)

System data		
Data	Process, parameter and diagnostic data depend on the coupler used, see the table in Section 4.11.	
Interface	u-remote system bus	
System bus transfer rate	48 Mbps /192 Mbps	
Inputs		
Number	4	
Input values	Current (0 ... 20 mA, 4 ... 20 mA, 4 ... 20 mA HART)	
HART Communication Protocol	Revision 5 to Revision 7	
Resolution	16 bits	
Accuracy	max. 0,1 % FSR ±50 ppm/K max.	at 25 °C Temperature coefficient
Sensor supply	no	
Sensor connection	2-wire, 2-wire + FE	
Conversion time	max. 1 ms all 4 channels per cycle, asynchronously sampled	
Limiting frequency	25 Hz	
Internal resistance	250 Ω	
Reverse polarity protection	yes	
Module diagnosis	yes	
Individual channel diagnosis	yes	
Isolation	500 V (channel to channel), 500 V (channel to supply voltage)	
Supply		
Supply voltage	24 V DC +20 %/-15 %	
Current consumption from system current path I_{SYS}	8 mA	
Current consumption from input current path I_{IN}	32 mA	
General data		
Weight (operational status)	93 g	
For additional general data, see Section 3.4		

Overview of the editable parameters UR20-4AI-I-HART-ISO-16

channel	Description	Options[1)]	Default
	Frequency suppression	disabled (0) / Average over 16 values (1) / 2 Hz low pass (2)	disabled
	Device auto recovery[2)]	disabled (0) / enabled (1)	enabled
	HART retry factor	0 (0) / 3 (1) / 5 (2) / 10 (3)	3
	HART start up time	1 sec. (0) / 2 sec. (1) / 4 sec. (2) / 8 sec. (3)	1 sec.
0 ... 3	Data format	S5 Data format (0) / S7 Data format (1)	S7 Data format
0 ... 3	Channel diagnosis	disabled (0) / enabled (1)	disabled
0 ... 3	Diag line break AI	disabled (0) / enabled (1)	disabled
0 ... 3	Diag HART	disabled (0) / enabled (1)	disabled
0 ... 3	Measurement range	0 to 20 mA (0) / 4 to 20 mA (1) / HART P2P (2) / HART multidrop (3) / disabled (4)	disabled

1) Values in brackets for Modbus-TCP (firmware version 02.00.00 and higher), CANopen, EtherCAT and EtherNet/IP via module parameter class
2) Device auto recovery may not work as expected if the device requires specific power up sequence before replying to HART commands.

Diagnostic data UR20-4AI-I-HART-ISO-16

Name	Byte	Bit	Description	Default
Error indicator	0	0	Module error	0
		1	Internal error	0
		2	External error	0
		3	Channel error	0
		4	Error	0
		5	Power supply fault	0
		6	Reserved	0
		7	Parameter error	0
Module type	1	0	Module type	0x05
		1		
		2		
		3		
		4	Channel information available	1
		5 ... 7	Reserved	0
Error byte 2	2	0 ... 7	Reserved	0
Error byte 3	3	0 ... 2	Reserved	0
		3	Internal diagnostic FIFO full	0
		4	Power supply fault	0
		5 ... 7	Reserved	0
Channel type	4	0 ... 6	Channel type	0x74
		7	Reserved	0
Diagnostic bits per channel	5		Number of diagnostic bit per channel	8
Number of channels	6		Number of similar channels per module	4
Channel error	7	0	Error at channel 0	0
		1	Error at channel 1	0
		2	Error at channel 2	0
		3	Error at channel 3	0
		4 ... 7	Reserved	0
Channel error	8	8 ... 15	Reserved	0
Channel error	9	16 ... 23	Reserved	0
Channel error	10	24 ... 31	Reserved	0
Channel 0 error	11	0	Parameter error	0
		1	Overload	0
		2	Reserved	0
		3	Reserved	0
		4	Line break AI	0
		5	HART diagnosis	0
		6	Lower limit exceeded	0
		7	Upper limit exceeded	0

Diagnostic data UR20-4AI-I-HART-ISO-16

Name	Byte	Bit	Description	Default
Channel 1 error	12	0	Parameter Error	0
		1	Overload	0
		2	Reserved	0
		3	Reserved	0
		4	Line break AI	0
		5	HART diagnosis	0
		6	Lower limit exceeded	0
		7	Upper limit exceeded	0
Channel 2 error	13	0	Parameter Error	0
		1	Overload	0
		2	Reserved	0
		3	Reserved	0
		4	Line break AI	0
		5	HART diagnosis	0
		6	Lower limit exceeded	0
		7	Upper limit exceeded	0
Channel 3 error	14	0	Parameter Error	0
		1	Overload	0
		2	Reserved	0
		3	Reserved	0
		4	Line break AI	0
		5	HART diagnosis	0
		6	Lower limit exceeded	0
		7	Upper limit exceeded	0
Channel 4 error to channel 31 error	15 ... 42	0 ... 7	Reserved	0
Time stamp	43-46		time stamp [µs] (32bit)	

A diagnosis is indicated when a diagnosis limit value has been exceeded.

Diagnosis limit values

Measurement range	Lower limit	Upper limit
0 ... 20 mA	-	21 mA
4 ... 20 mA	3.6 mA	21 mA

Process data[1] outputs UR20-4AI-I-HART-ISO-16

Byte	Format	Description
QB0	BYTE	Reserved
QB1	BYTE	Register address
QB2	BYTE	Reserved
QB3	BYTE	Reserved
QB4	BYTE	Reserved
QB5	BYTE	Reserved
QB6	BYTE	Reserved
QB7	BYTE	Reserved
QB8	BYTE	Reserved
QB9	BYTE	Reserved
QB10	BYTE	Reserved
QB11	BYTE	Reserved
QB12	BYTE	Reserved
QB13	BYTE	Reserved
QB14	BYTE	Reserved
QB15	BYTE	Reserved

1) Internal mapping of process data with data format „standard". Bytes and/or Words might be switched during data transfer depending on the fieldbus specification and the data format of the communicating fieldbus components.

Register addresses to input in QB1 for the display in IB10 ... IB15

Register no.	Description	Remark
0	Channel 0 HART sensor 1: status	
1	Channel 0 HART sensor 1: long HART address	
2	Channel 0 HART sensor 1: current	
3	Channel 0 HART sensor 1: Primary Value	
4	Channel 0 HART sensor 1: Secondary Value	
5	Channel 0 HART sensor 1: Tertiary Value	
6	Channel 0 HART sensor 1: Quaternary Value	
7	Reserved	
8	Reserved	
9	Reserved	
10 ... 19	Channel 0 HART sensor 2	as sensor 1
20 ... 29	Channel 0 HART sensor 3	as sensor 1
30 ... 39	Channel 0 HART sensor 4	as sensor 1
40 ... 49	Channel 0 HART sensor 5	as sensor 1
50 ... 99	Channel 1	as channel 0
100 ... 149	Channel 2	as channel 0
150 ... 199	Channel 3	as channel 0
200 ... 255	Reserved	

Process data[1] inputs UR20-4AI-I-HART-ISO-16

Byte	Bit	Format	Description
IB0		WORD	AI0
IB1			
IB2		WORD	AI1
IB3			
IB4		WORD	AI2
IB5			
IB6		WORD	AI3
IB7			
IB8	0	BOOLEAN	CH 0: HART status polling
	1	BOOLEAN	CH 1: HART status polling
	2	BOOLEAN	CH 2: HART status polling
	3	BOOLEAN	CH 3: HART status polling
	4	BOOLEAN	CH 0: HART communication error
	5	BOOLEAN	CH 1: HART communication error
	6	BOOLEAN	CH 2: HART communication error
	7	BOOLEAN	CH 3: HART communication error
IB9	0	BOOLEAN	Reserved
	1	BOOLEAN	Reserved
	2	BOOLEAN	Reserved
	3	BOOLEAN	Register reading break
	4	BOOLEAN	CH 0: HART communication
	5	BOOLEAN	CH 1: HART communication
	6	BOOLEAN	CH 2: HART communication
	7	BOOLEAN	CH 3: HART communication
IB10 ... IB15		variable	depends on the value set in QB1

1) Internal mapping of process data with data format „standard". Bytes and/or Words might be switched during data transfer depending on the fieldbus specification and the data format of the communicating fieldbus components.

Displays in IB10 ... IB15 according to the value set in QB1

Byte	Format	Selection in QB1		
		Status	Long HART address	Current/PV/ SV/TV/QV
IB10	BYTE	Register no.	Register no.	Register no.
IB11	BYTE	HART Port status	Long address Byte 0	Unit
IB12	DWORD	HART communication status	Long address Byte 1	Floating point byte 0
IB13		HART device status	Long address Byte 2	Floating point byte 1
IB14		Reserved	Long address Byte 3	Floating point byte 2
IB15		Reserved	Long address Byte 4	Floating point byte 3

Register communication in process data

If the UR20-4AI-I-HART-ISO-16 module is used together with a HART sensor, each channel of the module can work either in Point-to-point (P2P) HART mode or in Multidrop mode. With P2P mode only one HART sensor is monitored, with Multidrop mode up to five HART sensors can be monitored.

Register structure

Each HART sensor can induce up to four HART variables:
PV = Primary Value
SV = Secondary Value
TV = Tertiary Value
QV = Quaternary Value

These additional values consist of 5 Bytes each. Byte 1 indicates the unit of the physical dimension, the following four Bytes display the 4-Byte value in data type FLOATING POINT according to IEEE 754.
The additional process data of the single HART variables are filed internally in 256 registers (see table register addresses to input in QB1 for the display in IB10 ... IB15).

In the case of a faulty access, bit IB9.3 is set.

Measurement ranges UR20-4AI-I-HART-ISO-16, parameter Diag line break AI disabled

Measurement range	Current (I)	Decimal (D)	Hexadecimal	Range	Conversion
0 – 20 mA Siemens S7 format	23,52 mA	32511	0x7EFF	Overloading	D = 27648 x I / 20 I = D x 20 =/ 27648
	20 mA	27648	0x6C00	Nominal range	
	10 mA	13824	0x3600		
	0 mA	0	0x0000		
0 – 20 mA Siemens S5 format	23,52 mA	19268	0x4B44	Overloading	D = 16384 x I / 20 I = D x 20 / 16384
	20 mA	16384	0x4000	Nominal range	
	10 mA	8192	0x2000		
	0 mA	0	0x0000		
4 – 20 mA Siemens S7 format	22,81 mA	32511	0x7EFF	Overloading	D = 27648 x (I – 4) / 16 I= D x 16 / 27648 + 4
	20 mA	27648	0x6C00	Nominal range	
	12 mA	13824	0x3600		
	4 mA	0	0x0000		
	1,19 mA	-4864	0xED00	Underloading	
4 – 20 mA Siemens S5 format	22,82 mA	19268	0x4B44	Overloading	D = 16384 x (I – 4) / 16 I = D x 16 / 16384 + 4
	20 mA	16384	0x4000	Nominal range	
	12 mA	8192	0x2000		
	4 mA	0	0x0000		
	0,8 mA	-3277	0xF333	Underloading	

Measurement ranges UR20-4AI-I-HART-ISO-16 , parameter Diag line break AI enabled

Measurement range	Current (I)	Decimal (D)	Hexadecimal	Range	Conversion
0 ... 20 mA Siemens S7-Format	23,52 mA	32511	0x7EFF	Overloading	D = 27648 x I / 20 I = D x 20 =/ 27648
	20 mA	27648	0x6C00	Nominal range	
	10 mA	13824	0x3600		
	1,30 mA	1797	0x0705		
	1,20 mA	1659	0x067A	Line break	
0 ... 20 mA Siemens S5-Format	23,52 mA	19268	0x4B44	Overloading	D = 16384 x I / 20 I = D x 20 / 16384
	20 mA	16384	0x4000	Nominal range	
	10 mA	8192	0x2000		
	1,30 mA	1065	0x0428		
	1,20 mA	983	0x03D7	Line break	
4 ... 20mA Siemens S7-Format	22,81 mA	32511	0x7EFF	Overloading	D = 27648 x (I - 4) / 16 I= D x 16 / 27648 + 4
	20 mA	27648	0x6C00	Nominal range	
	12 mA	13824	0x3600		
	4 mA	0	0x0000		
	3,60 mA	-691	0xFD4D	Underloading	
	1,30 mA	-4666	0xEDC7		
	1,20 mA	-4838	0xED1A	Line break	
4 ... 20 mA Siemens S5-Format	22,82 mA	19268	0x4B44	Overloading	D = 16384 x (I - 4) / 16 I = D x 16 / 16384 + 4
	20 mA	16384	0x4000	Nominal range	
	12 mA	8192	0x2000		
	4 mA	0	0x0000		
	3,60 mA	-410	0xFE67	Underloading	
	1,30 mA	-2765	0xF534		
	1,20 mA	-2867	0xF4CD	Line break	

The input value 0x7FFF is displayed in the case of undervoltage.

The following applies for all S7 ranges:
input value > overload range = 0x7FFF
input value < underload range = 0x8000
Additional status bits are set for S5.

Digital measured value representation in Siemens S5 format

Data bit	7	6	5	4	3	2	1	0
Byte 0 (High Byte)	2^{12}	2^{11}	2^{10}	2^{9}	2^{8}	2^{7}	2^{6}	2^{5}
Byte 1 (low byte)	2^{4}	2^{3}	2^{2}	2^{1}	2^{0}	A	F	O

A: 0 = not active
1 = active
F: 0 = no line break
1 = line break
O: 0 = 0 to 4095 units
1 = ±4096 units (overflow)
Representation in two's complement
2^{12} = VZ in representation as amount and signs

HART commands

In the startup phase the HART master module will send HART command #0 for scanning the connected HART devices. In operation mode the HART master module cyclically sends HART command #3 for process data scanning of the connected HART devices.
Details of the HART commands #0 and #3 are shown in the table below.
Additional HART commands can be sent to connected HART devices via acyclic commands to the HART master.

For proper operation, make sure that acyclic commands are sent only from a single host at a time.

HART commands sent by HART master module

Command No.	Description	Format	Command type	Device
#0	HART protocol	Byte	U - by request (load, read when init)	any
	Software revision	Byte	U - by request (load, read when init)	any
	Hardware revision	Byte	U - by request (load, read when init)	any
	SensorNo	Byte	U - by request (load, read when init)	any
#3	Primary variable	Real	U - live value (loop current in mA)	any
	Primary variable	Real	U - live value	any
	PV unit	Byte	U - live value	any
	Secondary variable	Real	U - live value	any
	SV unit	Byte	U - live value	any
	Third variable	Real	U - live value	any
	TV unit	Byte	U - live value	any
	Fourth variable	Real	U - live value	any
	FV unit	Byte	U - live value	any
	Error code	Integer	U - live value	any

Configuration with Device Type Manager (DTM)

The following description shows the configuration with the Weidmüller Integration Manager (WI-Manager) as FDT frame application. For the configuration, the following software is required:

- Weidmüller Integration Manager (WI-Manager)
- DTM for UR20-FBC-MOD-TCP-V2
- DTM for UR20-4AI-I-HART-ISO-16

You can download the software from the product catalogue (Download in the product description of the HART module).

Before you start the configuration, the following requirements must be fulfilled:

- The u-remote station is completely assembled and wired up.
- The u-remote station is connected to a PC or laptop via USB or Ethernet.
- The SW Weidmueller DTM-Library Setup software is installed.
- The DTM of the connected sensor was downloaded from the vendor's website and is installed.
- An IP address is assigned and the Modbus transport protocol **TCP** is selected in the coupler parameters via the web server.

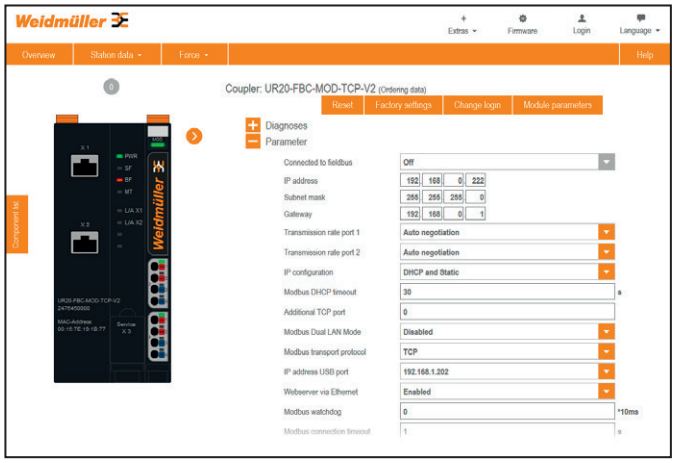

Component view for the UR20-FBC-MOD-TCP-V2 coupler in the webserver

- ► Open an empty project in the WI-Manager.
- ► If not already done when opening the WI-Manager: Update the device catalogue.
- ► Add the **MODBUS-TCP-COM-WI** DTM from the communication category to the network view.

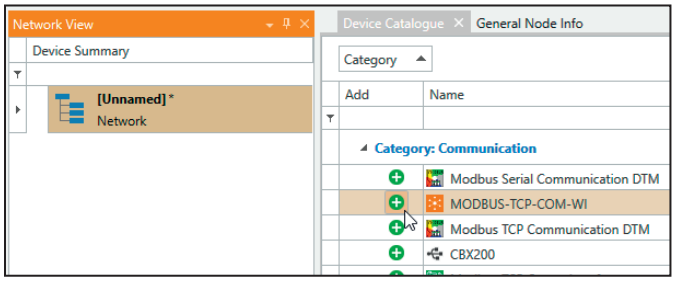

Adding the MODBUS-TCP-COM-WI DTM to the network view

- ► Add the **UR20-FBC-MOD-TCP-V2** DTM from the gateway category to the network view.
- ► If you are connected via Ethernet, set the IP address of the Ethernet interface and click **OK**.

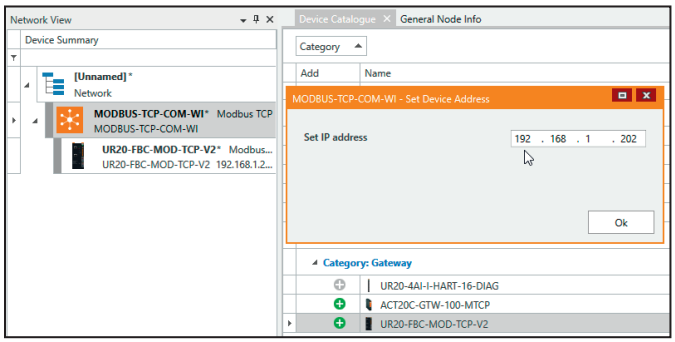

Setting the IP address of the Ethernet interface

- ► Add the **UR20-4AI-I-HART-ISO-16** DTM from the gateway category to the network view.
- ► Set the module slot number and click **OK**.

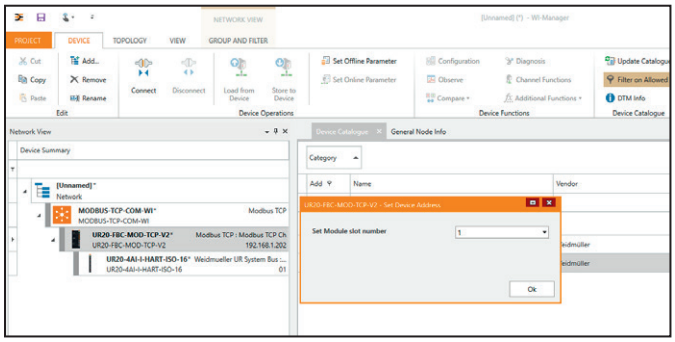

Setting the module slot number

- ► Add the DTM of the connected sensor from the device category to the network view.
- ► Select the channel to which the sensor is connected and click **OK**.

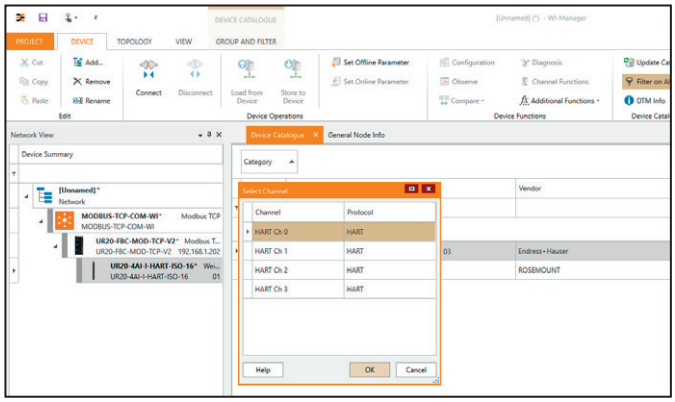

Selecting the channel of the connected sensor

► Set the short address of the HART device and click **OK**.

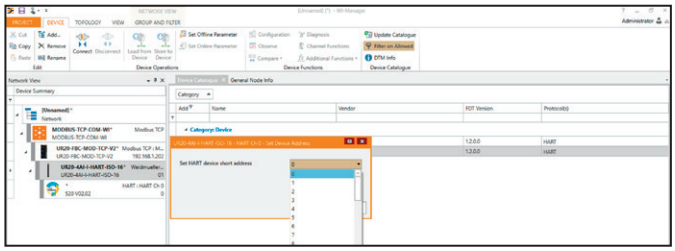

Setting the short address of the HART device

► Save the project.

By double-clicking on a DTM in the network view, you can now parameterise each device online or offline and use further FDT-specified functions, e. g. **Diagnosis** or **Observe**.

6.59 Analogue input module UR20-8AI-RTD-DIAG-2W

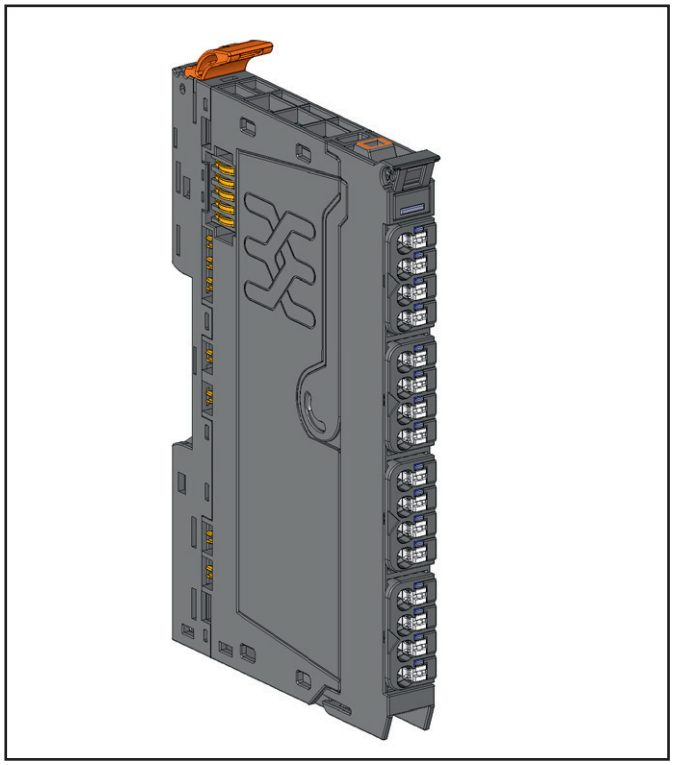

Analogue input module UR20-8AI-RTD-DIAG-2W (Item No. 2555940000)

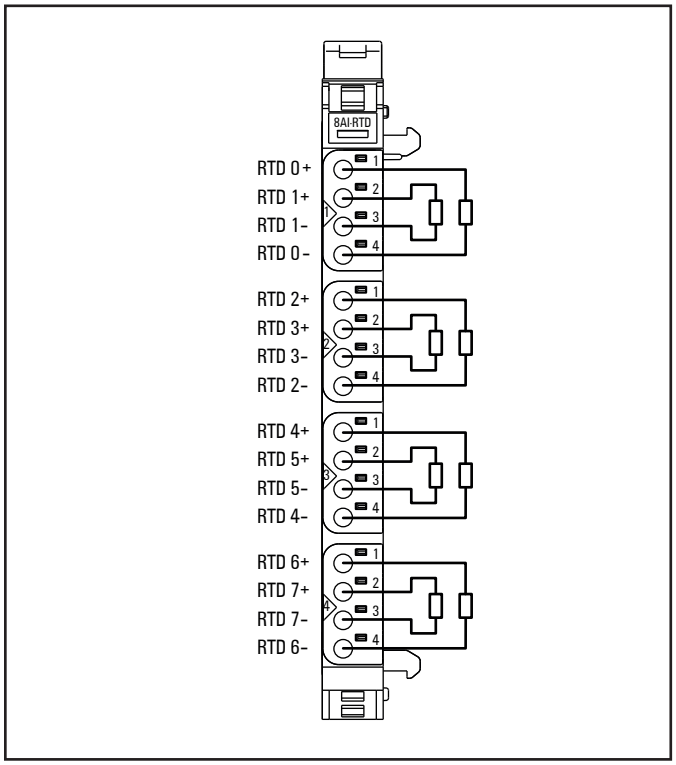

Connection diagram UR20-8AI-RTD-DIAG-2W

The analogue input module UR20-8AI-RTD-DIAG-2W can detect up to 8 analogue resistance thermometers. The resolution is 16 bit per channel. Two sensors can be connected to each connector in a 2-wire connection. Mixed operation using different sensors is possible. Sensor type and temperature range are set using parameterisation. A status LED is assigned to each channel.

The inputs are protected against voltage surges and overcurrent. Voltages that exceed ±30 V may cause the destruction of the module.

The module provides individual channel diagnosis with channel related error messages.

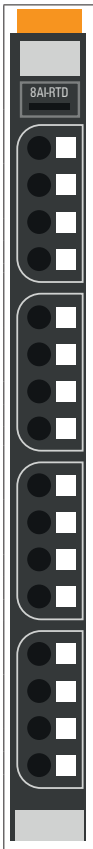

	Module status LED Green: Communication over the system bus Red: Error
1.1	Red: Input 0 signal outside the permissable range, line break or short circuit
1.2	Red: Input 1 signal outside the permissable range, line break or short circuit
2.1	Red: Input 2 signal outside the permissable range, line break or short circuit
2.2	Red: Input 3 signal outside the permissable range, line break or short circuit
3.1	Red: Input 4 signal outside the permissable range, line break or short circuit
3.2	Red: Input 5 signal outside the permissable range, line break or short circuit
4.1	Red: Input 6 signal outside the permissable range, line break or short circuit
4.2	Red: Input 7 signal outside the permissable range, line break or short circuit

LED indicators UR20-8AI-RTD-DIAG-2W, troubleshooting see Chapter 12

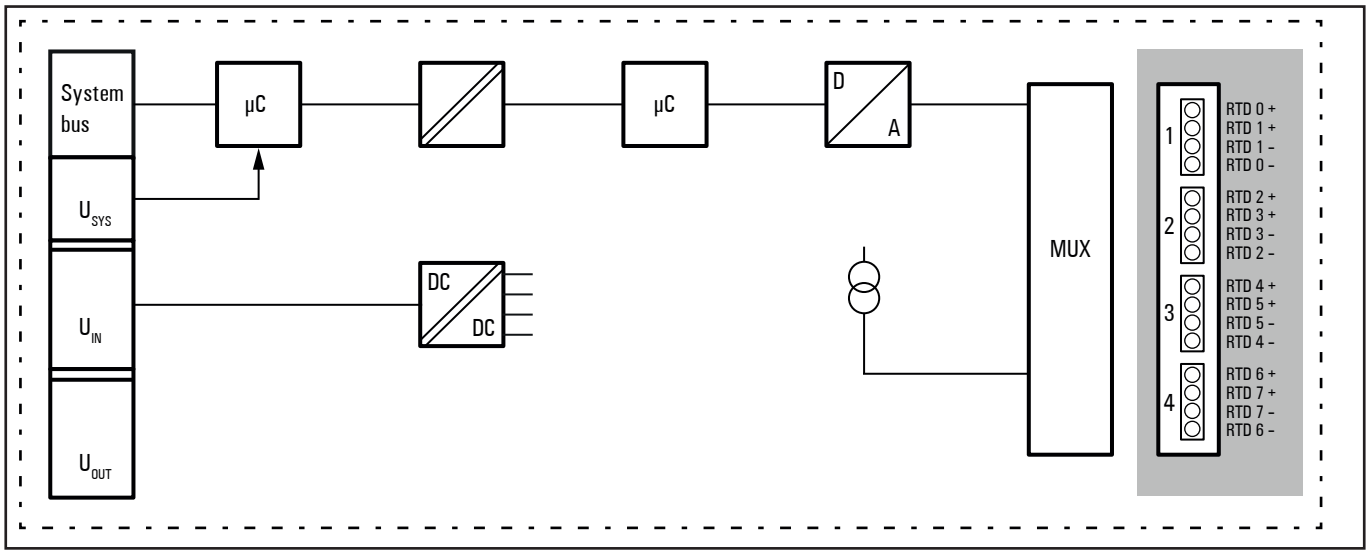

Block diagram UR20-8AI-RTD-DIAG-2W

Technical data UR20-8AI-RTD-DIAG-2W (Item No. 1315700000)

System data		
Data	Process, parameter and diagnostic data depend on the coupler used, see coupler description.	
Interface	u-remote system bus	
System bus transfer rate	48 Mbps	
Potential isolation	Channel/system bus	yes
	Channel/channel	no
Inputs		
Number	8	
Sensor types	Pt100, Pt200, Pt500, Pt1000, Ni100, Ni120, Ni 200, Ni500, Ni1000, Ni1000-LG, Cu10, 40 Ω, 80 Ω, 150 Ω, 300 Ω, 500 Ω, 1 kΩ, 2 kΩ, 4 kΩ	
Resolution	16 bits	
Accuracy	max. 0.2 % FSR / 0.3 % FSR for Ni sensors / 0.6 % FSR for Cu10	
Sensor connection	2-wire	
Sensor current	depending on the sensor type 0,75 mA (Pt100, Ni100, Ni120, Cu10, 40 Ω, 80 Ω, 150 Ω, 300 Ω) or 0,25 mA (Pt200, Pt500, Pt1000, Ni200, Ni500, Ni1000, Ni1000-LG, 500 Ω, 1 kΩ, 2 kΩ, 4 kΩ)	
Max. wire resistance	The wire resistance influences directly the measuring result.	
Temperature coefficient	±50 ppm/K max.	
Temperature range	-200 ... +850 °C	
Conversion time	80 ms	
Common mode input voltage range	Channel to channel: max. ±2 V	
	Channel to voltage supply: max. ±50 V	
Reverse polarity protection	yes	
Module diagnosis	yes	
Individual channel diagnosis	yes	
Supply		
Supply voltage	24 V DC +20 %/-15 %	
Current consumption from system current path I_{SYS}	8 mA	
Current consumption from input current path I_{IN}	< 20 mA	
General data		
Weight (operational status)	91 g	
For additional general data, see Section 3.4		

Overview of the editable parameters UR20-8AI-RTD-DIAG-2W

Channel	Description	Options[1)]	Default
	Temperature unit	Degree Celsius (0) / Degree Fahrenheit (1) / Kelvin (2)	Degree Celsius
0 ... 7	Measurement range	PT100 -200 ... 850 Degree Celsius (0) / PT200 -200 ... 850 Degree Celsius (1) / PT500 -200 ... 850 Degree Celsius (2) / PT1000 -200 ... 850 Degree Celsius (3) / NI100 -60 ... 250 Degree Celsius (4) / NI120 -80 ... 260 Degree Celsius (5) / NI200 -60 ... 250 Degree Celsius (6) / NI500 -60 ... 250 Degree Celsius (7) / NI1000 -60 ... 250 Degree (8) / NI1000-LG -60 ... 250 Degree Celsius (9) / Cu10 -100 ... 260 Degree Celsius (10) / Resistance 40 Ω (11) / Resistance 80 Ω (12)/ Resistance 150 Ω (13) / Resistance 300 Ω (14) / Resistance 500 Ω (15) / Resistance 1000 Ω (16) / Resistance 2000 Ω (17) / Resistance 4000 Ω (18) / disabled (19)	disabled
0 ... 7	Channel diagnostics	disabled (0) / enabled (1)	disabled

1) Values in brackets for Modbus-TCP (firmware version 02.00.00 and higher), CANopen, EtherCAT and EtherNet/IP via module parameter class

Diagnostic data UR20-8AI-RTD-DIAG-2W

Name	Bytes	Bit	Description	Default
Error indicator	0	0	Module error	
		1	Internal error	
		2	External error	
		3	Channel error	
		4	Error	
		5	Power supply fault	
		6	Reserved	0
		7	Parameter error	
Module types	1	0	Module type	0x05
		1		
		2		
		3		
		4	Channel information available	1
		5	Reserved	0
		6	Reserved	0
		7	Reserved	0
Error byte 2	2	0 - 7	Reserved	0
Error byte 3	3	0 - 2	Reserved	0
		3	Internal diagnostic FIFO full	
		4	Power supply fault	
		5	Reserved	0
		6	Reserved	
		7	Reserved	0
Channel type	4	0 - 6	Channel type	0x71
		7	Reserved	0
Diagnostic bits per channel	5		Number of diagnostic bit per channel	8
Number of channels	6		Number of similar channels per module	8
Channel error	7	0	Error at channel 0	
		1	Error at channel 1	
		2	Error at channel 2	
		3	Error at channel 3	
		4	Error at channel 4	
		5	Error at channel 5	
		6	Error at channel 6	
		7	Error at channel 7	0
Channel error	8	8 - 15	Reserved	0
Channel error	9	16 - 23	Reserved	0
Channel error	10	24 - 31	Reserved	0
Channel 0 error ... Channel 7 error	11 ... 18	0	Parameter error	
		1	Reserved	0
		2	Reserved	0
		3	Reserved	0
		4	Line break	
		5	Reserved	
		6	Lower limit exceeded	
		7	Upper limit exceeded	

Diagnostic data UR20-8AI-RTD-DIAG-2W

Name	Bytes	Bit	Description	Default
Channel 8 error to Channel 31 error	19 - 42	0 - 7	Reserved	0
Time stamp	43 - 46		Time stamp [µs] (32 bit)	

Process data[1] inputs UR20-8AI-RTD-DIAG-2W

Byte	Format	Description
IB0	Word	RTD0
IB1		
IB2	Word	RTD1
IB3		
IB4	Word	RTD2
IB5		
IB6	Word	RTD3
IB7		
IB8	Word	RTD4
IB9		
IB10	Word	RTD5
IB11		
IB12	Word	RTD6
IB13		
IB14	Word	RTD7
IB15		

1) Internal process data mapping with data format "Standard". Depending on the fieldbus specification and the data format of the communicating fieldbus components the bytes and/or words can be reversed during data transfer.

Resistance measurement ranges UR20-8AI-RTD-DIAG-2W

Measurement range	Resistance	Decimal	Hexadecimal	Range
40 Ω	> 47.04 Ω	32767	0x7FFF	Overloading or line break
	47.04 Ω	32511	0x7EFF	Overloading
	40 Ω	27648	0x6C00	Nominal range
	0	0	0x0000	
80 Ω	> 94.07 Ω	32767	0x7FFF	Overloading or line break
	94.07 Ω	32511	0x7EFF	Overloading
	80 Ω	27648	0x6C00	Nominal range
	0	0	0x0000	
150 Ω	> 176.4 Ω	32767	0x7FFF	Overloading or line break
	176.4 Ω	32511	0x7EFF	Overloading
	150 Ω	27648	0x6C00	Nominal range
	0	0	0x0000	
300 Ω	> 352.77 Ω	32767	0x7FFF	Overloading or line break
	352.77 Ω	32511	0x7EFF	Overloading
	300 Ω	27648	0x6C00	Nominal range
	0	0	0x0000	
500 Ω	> 587.9 Ω	32767	0x7FFF	Overloading or line break
	587.9 Ω	32511	0x7EFF	Overloading
	500 Ω	27648	0x6C00	Nominal range
	0	0	0x0000	
1 kΩ	> 1.177 kΩ	32767	0x7FFF	Overloading or line break
	1.177 kΩ	32511	0x7EFF	Overloading
	1.0 kΩ	27648	0x6C00	Nominal range
	0	0	0x0000	
2 kΩ	> 2.352 kΩ	32767	0x7FFF	Overloading or line break
	2.352 kΩ	32511	0x7EFF	Overloading
	2.0 kΩ	27648	0x6C00	Nominal range
	0	0	0x0000	
4 kΩ	> 4.703 kΩ	32767	0x7FFF	Overloading or line break
	4.703 kΩ	32511	0x7EFF	Overloading
	4.0 kΩ	27648	0x6C00	Nominal range
	0	0	0x0000	

Temperature measurement ranges UR20-8AI-RTD-DIAG-2W

Measurement range	Value in °C 0.1 ° resolution	Value in °F 0.1 °/digit	Value in K 0.1 K/digit	Range
Pt100	-2000 to 8500	-3280 to 15620	732 to 11232	-200 °C to +850 °C
	-2040	-3352	692	Underloading
	8540	15692	11272	Overloading
	32767	32767	32767	Line break
Pt200	-2000 to 8500	-3280 to 15620	732 to 11232	-200 °C to +850 °C
	-2040	-3352	692	Underloading
	8540	15692	11272	Overloading
	32767	32767	32767	Line break
Pt500	-2000 to 8500	-3280 to 15620	732 to 11232	-200 °C to +850 °C
	-2040	-3352	692	Underloading
	8540	15692	11272	Overloading
	32767	32767	32767	Line break
Pt1000	-2000 to 8500	-3280 to 15620	732 to 11232	-200 °C to +850 °C
	-2040	-3352	692	Underloading
	8540	15692	11272	Overloading
	32767	32767	32767	Line break
Ni100	-600 to +2500	-760 to 4820	2132 to 5232	-60 °C to 250 °C
	-640	-832	2092	Underloading
	2540	4892	5272	Overloading
	32767	32767	32767	Line break
Ni120	-800 to +2600	-1120 to +5000	1932 to 5332	-80 °C to 260 °C
	-840	-1192	1892	Underloading
	2640	5072	5372	Overloading
	32767	32767	32767	Line break
Ni200	-600 to +2500	-760 to 4820	2132 to 5232	-60 °C to 250 °C
	-640	-832	2092	Underloading
	2540	4892	5272	Overloading
	32767	32767	32767	Line break
Ni500	-600 to +2500	-760 to 4820	2132 to 5232	-60 °C to 250 °C
	-640	-832	2092	Underloading
	2540	4892	5272	Overloading
	32767	32767	32767	Line break

Temperature measurement ranges UR20-8AI-RTD-DIAG-2W

Measurement range	Value in °C 0.1 ° resolution	Value in °F 0.1 °/digit	Value in K 0.1 K/digit	Range
Ni1000, Ni1000-LG	-600 to +2500	-760 to 4820	2132 to 5232	-60 °C to 250 °C
	-640	-832	2092	Underloading
	2540	4892	5272	Overloading
	32767	32767	32767	Line break
Cu10	-1000 to +2600	-1480 to 5000	1732 to 5332	-100 °C to 260 °C
	-1040	-1552	1692	Underloading
	2640	5072	5372	Overloading
	32767	32767	32767	Line break

6.60 Analogue input module UR20-15AI-U-16-DIAG

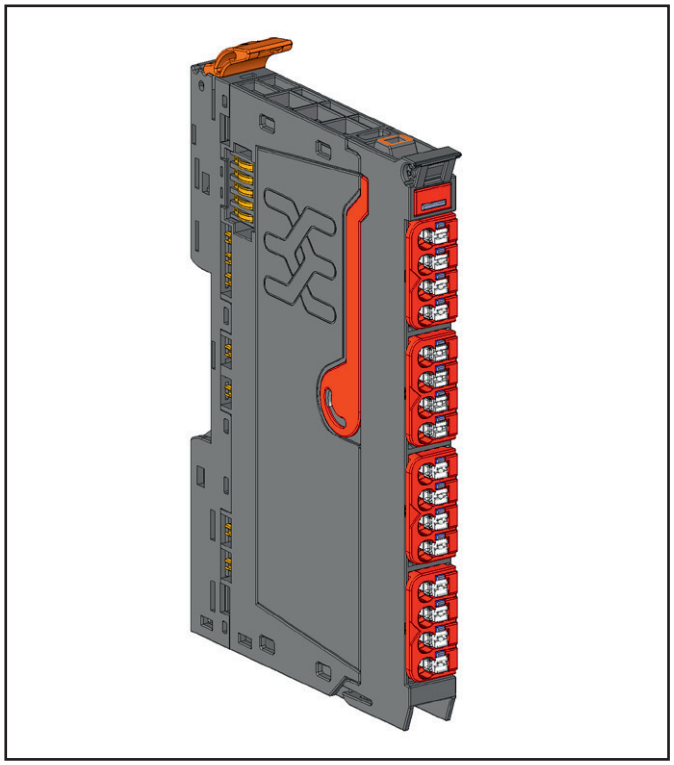

Analogue input module UR20-15AI-U-16-DIAG (Item No. 3039320000)

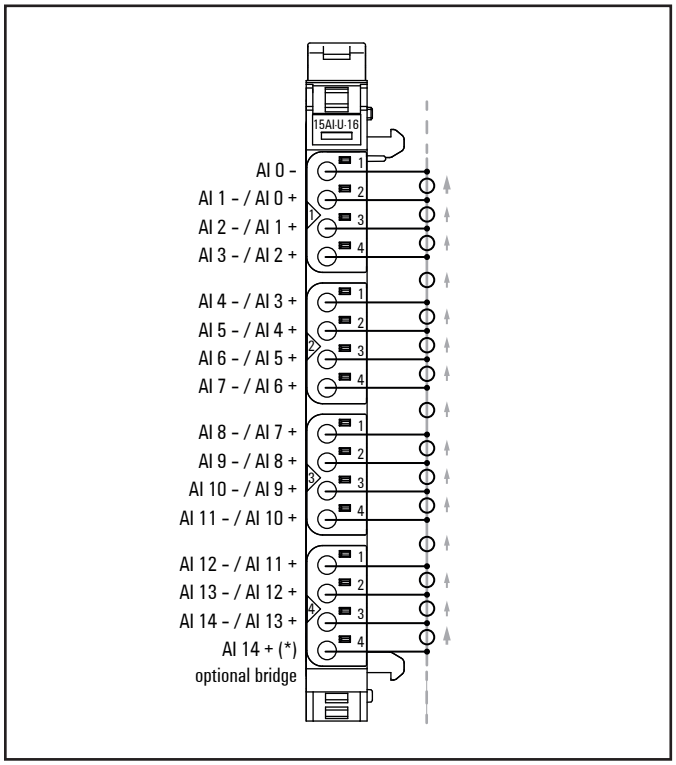

Connection diagram UR20-15AI-U-16-DIAG

The UR20-15AI-U-16-DIAG module is a 15-channel analogue input module for differential voltage measurement. The module can be used to monitor the voltage of cells connected in series, e.g. batteries, electrolisers for hydrogen generation, and similar applications. Another application option is the measurement of up to 8 differential voltages within a measurement range of ± 100 V.
The AI14-/AI13+ and AI14+(*) connections can be parameterised as being internally bridged to establish a connection with further modules of the same type UR20-15AI-U-16-DIAG connected in series. The measuring range of the analogue inputs can be parameterised. User scaling is possible. The individual channels are isolated from the system bus with a voltage of up to 1500 V DC (from HW version 02.00.00 on). Individual channel diagnostics are parameterisable, e.g. undervoltage, overvoltage, wire breakage.

ATTENTION

The module can be destroyed by electrostatic discharge.
When handling the module, the necessary safety measures against electrostatic discharge (ESD) in accordance with IEC 61340-5-1 and IEC 61340-5-2 must be observed.

Name	Connection
AI 0-	Analogue Input 0 minus
AI 1- / AI 0+	Analogue Input 1 minus / Analogue Input 0 plus
AI 2- / AI 1+	Analogue Input 2 minus / Analogue Input 1 plus
AI 3- / AI 2+	Analogue Input 3 minus / Analogue Input 2 plus
AI 4- / AI 3+	Analogue Input 4 minus / Analogue Input 3 plus
AI 5- / AI 4+	Analogue Input 5 minus / Analogue Input 4 plus
AI 6- / AI 5+	Analogue Input 6 minus / Analogue Input 5 plus
AI 7- / AI 6+	Analogue Input 7 minus / Analogue Input 6 plus
AI 8- / AI 7+	Analogue Input 8 minus / Analogue Input 7 plus
AI 9- / AI 8+	Analogue Input 9 minus / Analogue Input 8 plus
AI 10- / AI 9+	Analogue Input 10 minus / Analogue Input 9 plus
AI 11- / AI 10+	Analogue Input 11 minus / Analogue Input 10 plus
AI 12- / AI 11+	Analogue Input 12 minus / Analogue Input 11 plus
AI 13- / AI 12+	Analogue Input 13 minus / Analogue Input 12 plus
AI 14- / AI 13+	Analogue Input 14 minus / Analogue Input 13 plus
AI 14- optionally bridged	Analogue Input 14 minus, with parameterised bridge: Analogue Input 13 plus

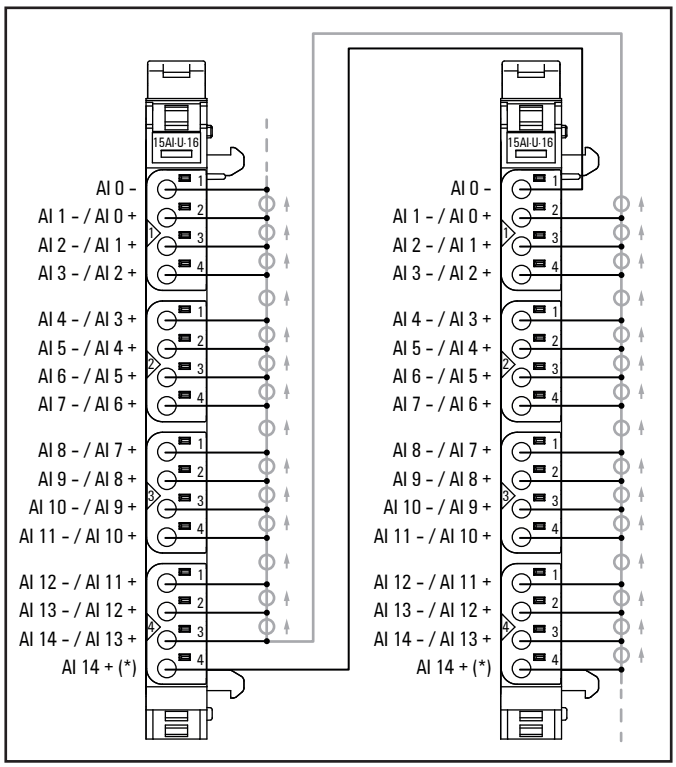

Connection variant for measuring chained voltages across several modules (AI 14 bridged)

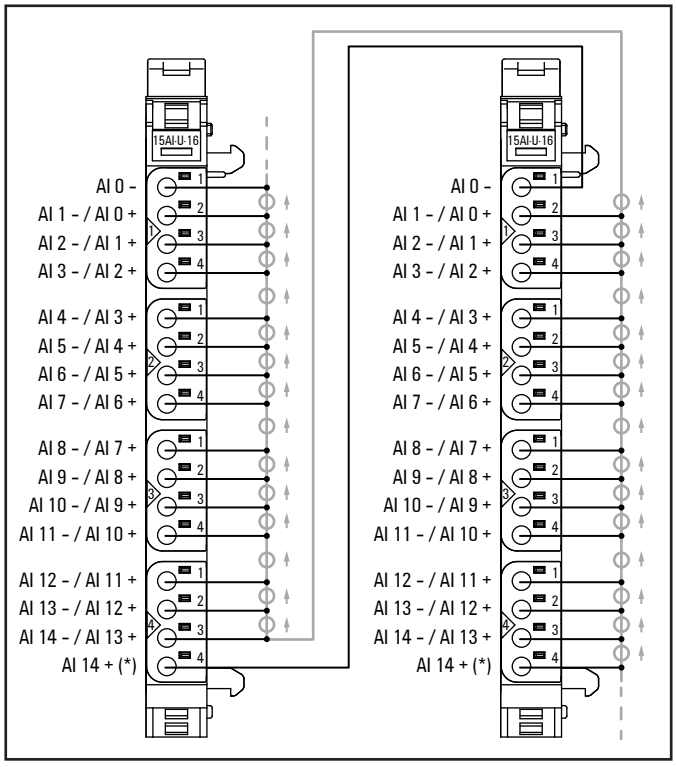

Connection variant for measuring chained voltages across several modules (AI 14 unbridged)

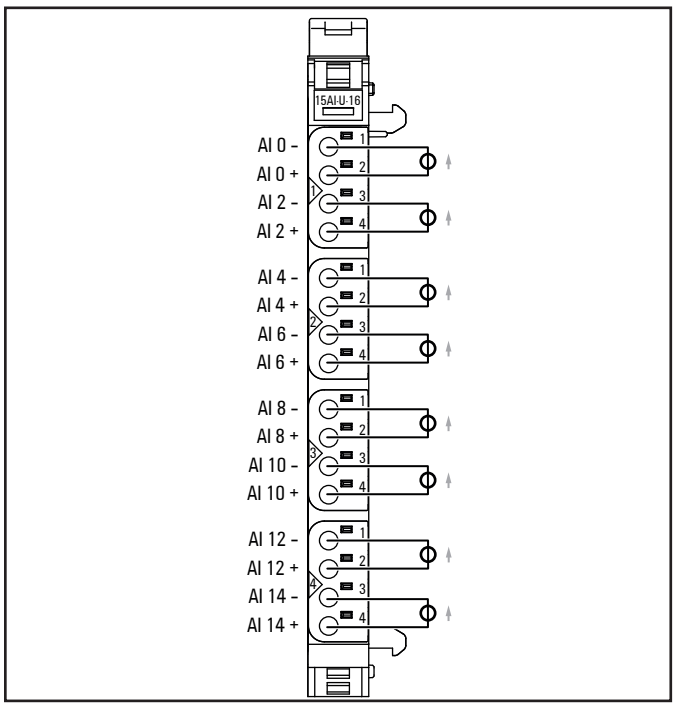

Connection variant for measuring 8 differential voltages, 2-wire-connection

For measuring differential voltages, the 'Measurement range' parameter must be disabled for all unused channels.



	Module status LED Green: communication over the system bus Red: error
1.1	Red: channel error
1.2	Red: channel error
1.3	Red: channel error
1.4	Red: channel error
2.1	Red: channel error
2.2	Red: channel error
2.3	Red: channel error
2.4	Red: channel error
3.1	Red: channel error
3.2	Red: channel error
3.3	Red: channel error
3.4	Red: channel error
4.1	Red: channel error
4.2	Red: channel error
4.3	Red: channel error
4.4	Yellow: bridge activated

LED- indicators UR20-15AI-U-16-DIAG, troubleshooting see Chapter 12

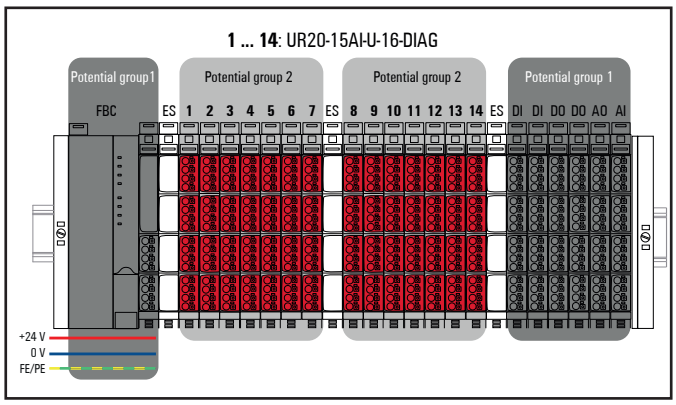

Example application with 3 potential groups, separated by 3 x UR20-ES

Whenever potential differences greater than 1000 V DC (non-Ex area) or 800 V DC (Ex area) may occur between adjacent potential groups, a UR20-ES- module (HW02.00) must be placed between the adjacent modules to ensure that the clearances and creepage distances between the adjacent potential groups are maintained. Adjacent UR20-15AI-U-16-DIAG modules may also belong to different potential groups.

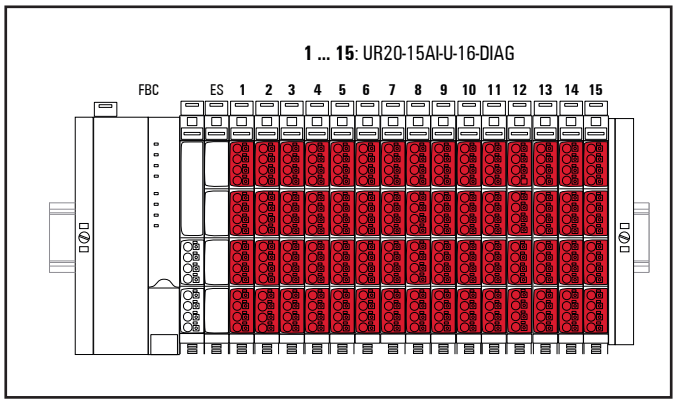

Example application with 2 potential groups, separated by 1 x UR20-ES (potential groups coupler vs. UR20-15AI-U-16-DIAG)

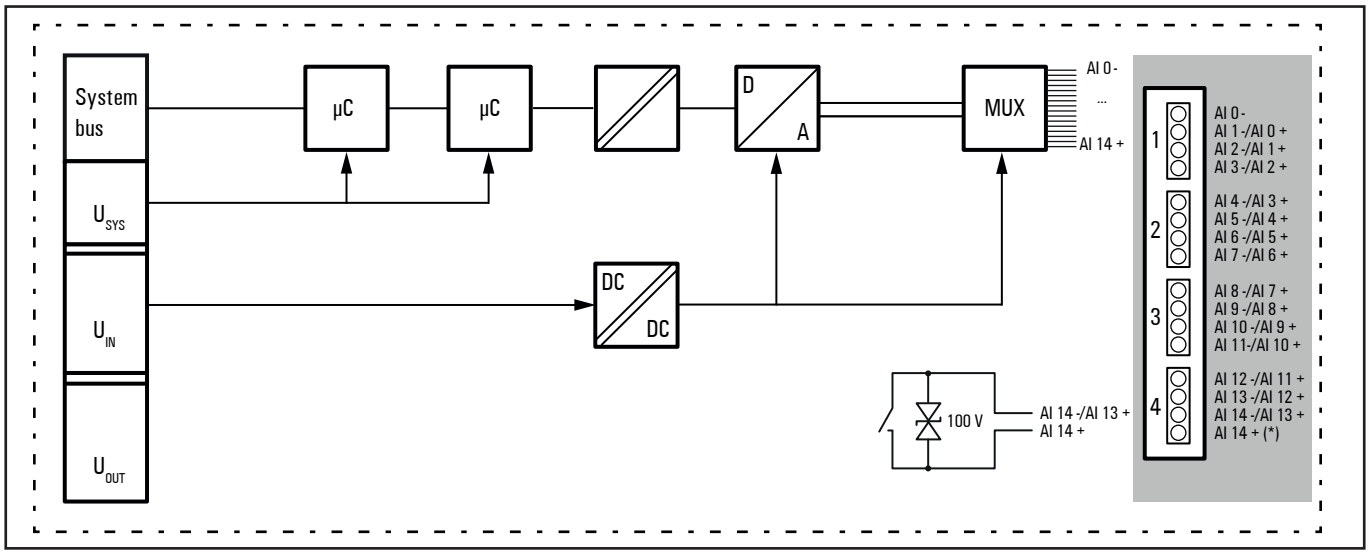

Block diagram UR20-15AI-U-16-DIAG

Technical data UR20-15AI-U-16-DIAG (Item No. 3039320000)

System data	
Data	Process, parameter and diagnostic data depend on the coupler used, see coupler description.
Interface	u-remote system bus
System bus transfer rate	48 MBit/s
Inputs	
Number	14/15 parameterisable[1] with 1-wire connection, 8 with 2-wire connection
Input type	analogue voltage input
Channel resolution	16 Bit
Input resistance	> 1 MΩ
Input range	±3 V / ±5 V / ±10 V / ±30 V / 0...3 V / 0...5 V / 0...10 V / 0...30 V 0 ... 100 V / ± 100 V
Input filter	parameterisable
Accuracy	typ. 0,1 % FSR at 25 °C, referred to input range ± 10 V
Temperature drift	±50 ppm/K, referred to input range ± 10 V
Module conversion time	max. 1 ms (all 15 channels, asynchronous sampled)
Bandwidth	1 kHz
Sensor supply	none
Sensor connection	1-wire, with differential analogue sensors (AI x- / AI x+) 2-wire
Reverse polarity protection	yes
Module diagnosis	yes
Single channel diagnosis	yes
Isolation (valid from HW version 02.00.00 on)	Field to system bus: up to 1500 V DC[2] permanently, overvoltage temporarily max. 2500 V, reinforced insulation Field to inputs (24 V): up to 1500 V DC[2] permanently, overvoltage temporarily max. 2500 V, reinforced insulation
Max. voltage difference	between any two input contacts of a module: 200 V to another potential group: 1500 V DC[2]
Supply	
Supply voltage	24 V DC + 20 %/-15 %
Current consumption from system current path I_{SYS}	6 mA
Current consumption from input current path I_{IN}	18.8 mA
General data	
Weight (operational status)	86 g
For additional general data see Section 3.4	

1) If the bridge is parameterised at AI 14, the 15th analogue input is omitted and AI 13+ is available on terminals 4.3 and 4.4. The bridge between terminals 4.3 and 4.4 can be loaded with a maximum of 10 mA at ± 100 V. There is no short-circuit protection.

2) Insulation of up to 1500 V DC can only be achieved if an empty slot module UR20-ES (from HW version 02.00.00 on) is installed both before and after a continuous sequence of UR20-15AI-U-16-DIAG modules (from HW version 02.00.00 on). An empty slot module is not necessary next to an end module. The UR20-ES empty slot modules increase the clearances and creepage distances to touchable voltages (SELV / PELV) or earthed parts. If no UR20-ES empty slot modules are inserted, the insulation is reduced to a maximum of 1000 V DC (for applications in non-Ex areas) or 800 V DC (for applications in Ex area Zone 2 or Class 1 Div. 2).

Overview of the editable parameter UR20-15AI-U-16-DIAG

Channel	Description	Options[1)]	Default
	Frequency suppression	disabled (0) / 50 Hz (1) / 60 Hz (2) / 1,4 kHz (3)	disabled (0)
	Channel diagnosis	disabled (0) / enabled (1)	disabled (0)
	Wire break detection	disabled (0) / enabled (1)	disabled (0)
	Data format	S7 Data format (0 ... 27648) (0) / user scale (1)	S7 (0)
	User scale offset		0x0000
	User full scale value		0x7FFF
	Voltage high limit		0x7FFF
	Voltage low limit		0x8000
0 ... 13	Measurement range	0 ...100 V (0) / -100 ... 100 V (1) / 0 ... 30 V (2) / -30 ... 30 V (3) / 0 ...10 V (4) / -10 ... 10 V (5) / 0 ... 5 V (6) / -5 ... 5 V (7) / 0 ... 3 V (8) / -3 ... 3 V (9) / disabled (0xF)	disabled (0xF)
0 ... 13	Voltage alarm limit	disabled (0) / low (1) / high (2) / low and high (3)	disabled (0)
14	Measurement range	0 ... 100 V (0), -100 V ... 100 V (1) / 0 ... 30 V (2) / -30 ... 30 V (3) / 0 ...10 V (4) / -10 ... 10 V (5) / 0 ... 5 V (6) / -5 ... 5 V (7) / 0 ... 3 V (8) / -3 ... 3 V (9) / bridged (0xE) / disabled (0xF)	disabled (0xF)
14	Voltage alarm limit	disabled (0) / low (1) / high (2) / low and high (3)	disabled (0)

1) Values in brackets for Modbus-TCP (firmware version 02.00.00 and higher), CANopen, EtherCAT and EtherNet/IP via module parameter class

Diagnostic data UR20-15AI-U-16-DIAG

Name	Bytes	Bit	Description	Default
Error indicator	0	0	Module error	
		1	Internal error	
		2	External error	
		3	Channel error	0
		4	Error	
		5	Power supply fault	0
		6	Reserved	0
		7	Parameter error	
Module type	1	0	Module type	0x05
		1		
		2		
		3		
		4	Channel info available	1
		5	Reserved	0
		6	Reserved	0
		7	Reserved	0
Error byte 2	2	0 ... 7	Reserved	0
Error byte 3	3	0	Overtemperature	0
		1	Internal error	
		2	Reserved	
		3	Diagnosis storage full	0
		4	Communication error	0
		5 ... 7	Reserved	0
Channel type	4	0 ... 7	Channel type	0x65
Diagnostic bits per channel	5		Number of diagnostic bits per channel	4

Diagnostic data UR20-15AI-U-16-DIAG

Name	Bytes	Bit	Description	Default
Number of channels	6		Number of similar channels per module	15
Channel error	7	0	Error at channel 0	
		1	Error at channel 1	
		2	Error at channel 2	
		3	Error at channel 3	
		4	Error at channel 4	
		5	Error at channel 5	
		6	Error at channel 6	
		7	Error at channel 7	
Channel error	8	0	Error at channel 8	
		1	Error at channel 9	
		2	Error at channel 10	
		3	Error at channel 11	
		4	Error at channel 12	
		5	Error at channel 13	
		6	Error at channel 14	
		7	Reserved	
Channel error	9 ... 10	0 ... 31	Reserved	0
Channel 0 error to Channel 14 error	11 ... 25	0	Upper limit exceeded	
		1	Lower limit exceeded	
		2	Line break	
		3	Range error	
		4 ... 7	Reserved	
Channel 15 error to Channel 31 error	26 ... 42	0 ... 7	Reserved	0
Time stamp	43 ... 46		Time stamp [µs] (32 bit)	

The process data of the 14/15 analogue inputs is transmitted via a mailbox process. In byte 0 of the output process data, one out of four different data packages is selected for transmission. The selected analogue inputs are then displayed in byte 0 to byte 7 of the input process data. Bits 0 and 1 of byte 8 show which data package has just been transmitted.
Bit 7 provides feedback whether the bridge has been activated on analogue input AI 14.
The mailbox process packs the process data of the UR20-15AI-U-16-DIAG module and makes optimum use of the available process image of the fieldbus coupler. Thus, up to 50 UR20-15AI-U-16-DIAG modules can be operated with the UR20-FBC-PN-IRT-V2 fieldbus coupler, for example.

Process data inputs UR20-15AI-U-16-DIAG

Byte	Bit	Format	Value	Description
0, 1		int16	-32768 ... 32767	Mailbox data, Word 0
2, 3		int16	-32768 ... 32767	Mailbox data, Word 1
4, 5		int16	-32768 ... 32767	Mailbox data, Word 2
6, 7		int16	-32768 ... 32767	Mailbox data, Word 3
8	0, 1	uint8	0 ... 3	Mailbox address, acknowledge
8	6	uint8	0,1	Hold AD values, acknowledge
8	7	uint8	0,1	Bridge activated

Process data outputs UR20-15AI-U-16-DIAG

Byte	Bit	Format	Value	Description
0	0, 1	uint8	0 ... 3	Mailbox address, request
0	6	uint8	0, 1	Hold AD values, request

The analogue values are converted to digital values (AD values) continuously. In order to read all 14/15 AD values from a conversion cycle, the following sequence must be followed:

1. Set the **Hold AD values, request** output bit to **TRUE**.
2. Wait until the **Hold AD values, acknowledge** input bit is set to TRUE.
3. Read the mailbox data for all channels.
4. Set the **Hold AD values, request** output bit back to **FALSE**.
5. Wait until the **Hold AD Values, acknoledge** input bit is set back to **FALSE**.

Symmetric measurement ranges UR20-15AI-U-16-DIAG, Siemens S7 format

Measurement range	Voltage (U)	Decimal (D)	Hexadecimal	Range	Conversion
-3 ... 3 V	> 3.5277 V	32767	0x7FFF	Overflow	Range Alarm ON = 3.15 V ; OFF = 3.09 V U = Measurement value D = Process value D = 27648 x U / 3 V U = D x 3 V / 27648 Range Alarm ON = -3.15 V ; OFF = -3.09 V
	3.5277 V	32511	0x7EFF	Overloading	
	3.0001 V	27649	0x6C01		
	3.0000 V	27648	0x6C00	Nominal range	
	0.0000 V	0	0x0000		
	-3.0000 V	-27648	0x9400		
	-3.0001 V	-27649	0x9401	Underloading	
	-3.5278 V	-32512	0x8100		
	< -3.5278 V	-32768	0x8000	Underflow	
-5 ... 5 V	> 5.8794 V	32767	0x7FFF	Overflow	Range Alarm ON = 5.25 V ; OFF = 5.15 V U = Measurement value D = Process value D = 27648 x U / 5 V U = D x 5 V / 27648 Range Alarm ON = -5.25 V ; OFF = -5.15 V
	5.8794 V	32511	0x7EFF	Overloading	
	5.0002 V	27649	0x6C01		
	5.0000 V	27648	0x6C00	Nominal range	
	0.0000 V	0	0x0000		
	-5.0000 V	-27648	0x9400		
	-5.0002 V	-27649	0x9401	Underloading	
	-5.8796 V	-32512	0x8100		
	< -5.8796 V	-32768	0x8000	Underflow	
-10 ... 10 V	> 11.7589 V	32767	0x7FFF	Overflow	Range Alarm ON = 10.5 V ; OFF = 10.3 V U = Measurement value D = Process value D = 27648 x U / 10 V U = D x 10 V / 27648 Range Alarm ON = -10.5 V ; OFF = -10.3
	11.7589 V	32511	0x7EFF	Overloading	
	10.0004 V	27649	0x6C01		
	10.0000 V	27648	0x6C00	Nominal range	
	0.0000 V	0	0x0000		
	-10.0000 V	-27648	0x9400		
	-10.0004 V	-27649	0x9401	Underloading	
	-11.7593 V	-32512	0x8100		
	< -11.7593 V	-32768	0x8000	Underflow	
-30 ... 30 V	> 35.2767 V	32767	0x7FFF	Overflow	Range Alarm ON = 31.5 V ; OFF = 30.9 V U = Measurement value D = Process value D = 27648 x U / 30 V U = D x 30 V / 27648 Range Alarm ON = -31.5 V ; OFF = -30.9 V
	35.2767 V	32511	0x7EFF	Overloading	
	30.0011 V	27649	0x6C01		
	30.0000 V	27648	0x6C00	Nominal range	
	0.0000 V	0	0x0000		
	-30.0000 V	-27648	0x9400		
	-30.0011 V	-27649	0x9401	Underloading	
	-35.2778 V	-32512	0x8100		
	< -35.2778 V	-32768	0x8000	Underflow	

Symmetric measurement ranges UR20-15AI-U-16-DIAG, Siemens S7 format

Measurement range	Voltage (U)	Decimal (D)	Hexadecimal	Range	Conversion
-100 ... 100 V	> 102.9984 V	32767	0x7FFF	Overflow	Range Alarm ON = 102.9 V ; OFF = 101 V U = Measurement value D = Process value D = 27648 x U / 100 V U = D x 100 V / 27648 Range Alarm ON = -102.9 V ; OFF = -101 V
	102.9984 V	32511	0x7EFF	Overloading	
	100.0036 V	27649	0x6C01		
	100.0000 V	27648	0x6C00	Nominal range	
	0.0000 V	0	0x0000		
	-100.0000 V	-27648	0x9400		
	-100.0036 V	-27649	0x9401	Underloading	
	-102.9984 V	-32512	0x8100		
	< -102.9984 V	-32768	0x8000	Underflow	

In the case of undervoltage (power supply), the input value 0x7FFF is displayed

The following applies for all S7 ranges:
input value > overload range = 0x7FFF
input value < underload range = 0x8000

Symmetric measurement ranges UR20-15AI-U-16-DIAG, user scale

Measurement range	Voltage (U)	Decimal (D)	Hexadecimal	Range	Conversion
-3 ... 3 V	> 3.5277 V	32767	0x7FFF	Overflow	Range Alarm ON = 3.15 V ; OFF = 3.09 V U = Measurement value D = Process value S = User full scale value = Default 0x7FFF = 32767 O = User scale offset = Default 0x0000 = 0 D = (S - O) x U / 3 V + O U = (D - O) / (S - O) x 3 V Range Alarm ON = -3.15 V ; OFF = -3.09 V
	3.5277 V	D = (S - O) x U / 3 V + O		Overloading	
	3.0001 V				
	3.0000 V	S		Nominal range	
	0.0000 V	O			
	-3.0000 V	-S+(2*O)			
	-3.0001 V	D = (S - O) x U / 3 V + O		Underloading	
	-3.5278 V				
	< -3.5278 V	-32768	0x8000	Underflow	
-5 ... 5 V	> 5.8794 V	32767	0x7FFF	Overflow	Range Alarm ON = 5.25 V ; OFF = 5.15 V U = Measurement value D = Process value S = User full scale value = Default 0x7FFF = 32767 O = User scale offset = Default 0x0000 = 0 D = (S - O) x U / 5 V + O U = (D - O) / (S - O) x 5 V Range Alarm ON = -5.25 V ; OFF = -5.15 V
	5.8794 V	D = (S - O) x U / 5 V + O		Overloading	
	5.0002 V				
	5.0000 V	S		Nominal range	
	0.0000 V	O			
	-5.0000 V	-S+(2*O)			
	-5.0002 V	D = (S - O) x U / 5 V + O		Underloading	
	-5.8796 V				
	< -5.8796 V	-32768	0x8000	Underflow	

Symmetric measurement ranges UR20-15AI-U-16-DIAG, user scale

Measurement range	Voltage (U)	Decimal (D)	Hexadecimal	Range	Conversion
-10 ... 10 V	> 11.7589 V	32767	0x7FFF	Overflow	Range Alarm ON = 10.5 V ; OFF = 10.3 V U = Measurement value D = Process value S = User full scale value = Default 0x7FFF = 32767 O = User scale offset = Default 0x0000 = 0 D = (S - O) x U / 10 V + O U = (D - O) / (S - O) x 10 V Range Alarm ON = -10.5 V ; OFF = -10.3
	11.7589 V	D = (S - O) x U / 10 V + O		Overloading	
	10.0004 V				
	10.0000 V	S		Nominal range	
	0.0000 V	O			
	-10.0000 V	-S+(2*O)			
	-10.0004 V	D = (S - O) x U / 10 V + O		Underloading	
	-11.7593 V				
	< -11.7593 V	-32768	0x8000	Underflow	
-30 ... 30 V	> 35.2767 V	32767	0x7FFF	Overflow	Range Alarm ON = 31.5 V ; OFF = 30.9 V U = Measurement value D = Process value S = User full scale value = Default 0x7FFF = 32767 O = User scale offset = Default 0x0000 = 0 D = (S - O) x U / 30 V + O U = (D - O) / (S - O) x 30 V Range Alarm ON = -31.5 V ; OFF = -30.9 V
	35.2767 V	D = (S - O) x U / 30 V + O		Overloading	
	30.0011 V				
	30.0000 V	S		Nominal range	
	0.0000 V	O			
	-30.0000 V	-S+(2*O)			
	-30.0011 V	D = (S - O) x U / 30 V + O		Underloading	
	-35.2778 V				
	< -35.2778 V	-32768	0x8000	Underflow	
-100 ... 100 V	> 102.9984 V	32767	0x7FFF	Overflow	Range Alarm ON = 102.9 V ; OFF = 101 V U = Measurement value D = Process value S = User full scale value = Default 0x7FFF = 32767 O = User scale offset = Default 0x0000 = 0 D = (S - O) x U / 100 V + O U = (D - O) / (S - O) x 100 V Range Alarm ON = -102.9 V ; OFF = -101 V
	102.9984 V	D = (S - O) x U / 100 V + O		Overloading	
	100.0036 V				
	100.0000 V	S		Nominal range	
	0.0000 V	O			
	-100.0000 V	-S+(2*O)			
	-100.0036 V	D = (S - O) x U / 100 V + O		Underloading	
	-102.9984 V				
	< -102.9984 V	-32768	0x8000	Underflow	

Asymmetric measurement ranges UR20-15AI-U-16-DIAG, Siemens S7 format

Measurement range	Voltage (U)	Decimal (D)	Hexadecimal	Range	Conversion
0 ... 3 V	> 3.5277 V	32767	0x7FFF	Overflow	Range Alarm ON = 3.15 V ; OFF = 3.09 V U = Measurement value D = Process value D = 27648 x U / 3 V U = D x 3 V / 27648 Range Alarm ON = -0.15 V ; OFF = -0.09 V
	3.5277 V	32511	0x7EFF	Overloading	
	3.0001 V	27649	0x6C01		
	3.0000 V	27648	0x6C00	Nominal range	
	0.0000 V	0	0x0000		
	-0.0001 V	-1	0xFFFF	Underloading	
	-0.5278 V	-4864	0xED00		
	< -0.5278 V	-32768	0x8000	Underflow	

Asymmetric measurement ranges UR20-15AI-U-16-DIAG, Siemens S7 format

Measurement range	Voltage (U)	Decimal (D)	Hexadecimal	Range	Conversion
0 ... 5 V	> 5.8794 V	32767	0x7FFF	Overflow	Range Alarm ON = 5.25 V ; OFF = 5.15 V U = Measurement value D = Process value D = 27648 x U / 5 V U = D x 5 V / 27648 Range Alarm ON = -0.25V ; OFF = -0.15V
	5.8794 V	32511	0x7EFF	Overloading	
	5.0002 V	27649	0x6C01		
	5.0000 V	27648	0x6C00	Nominal range	
	0.0000 V	0	0x0000		
	-0.0002 V	-1	0xFFFF	Underloading	
	-0.8796 V	-4864	0xED00		
	< -0.8796 V	-32768	0x8000	Underflow	
0 ... 10 V	> 11.7589 V	32767	0x7FFF	Overflow	Range Alarm ON = 10.5 V ; OFF = 10.3 V U = Measurement value D = Process value D = 27648 x U / 10 V U = D x 10 V / 27648 Range Alarm ON = -0.5V ; OFF = -0.3V
	11.7589 V	32511	0x7EFF	Overloading	
	10.0004 V	27649	0x6C01		
	10.0000 V	27648	0x6C00	Nominal range	
	0.0000 V	0	0x0000		
	-0.0004 V	-1	0xFFFF	Underloading	
	-1.7593 V	-4864	0xED00		
	< -1.7593 V	-32768	0x8000	Underflow	
0 ... 30 V	> 35.2767 V	32767	0x7FFF	Overflow	Range Alarm ON = 31.5 V ; OFF = 30.9 V U = Measurement value D = Process value D = 27648 x U / 30 V U = D x 30 V / 27648 Range Alarm ON = -1.5V ; OFF = -0.9V
	35.2767 V	32511	0x7EFF	Overloading	
	30.0011 V	27649	0x6C01		
	30.0000 V	27648	0x6C00	Nominal range	
	0.0000 V	0	0x0000		
	-0.0011 V	-1	0xFFFF	Underloading	
	-5.2778 V	-4864	0xED00		
	< -5.2778 V	-32768	0x8000	Underflow	
0 ... 100 V	> 102.9984 V	32767	0x7FFF	Overflow	Range Alarm ON = 102.9 V ; OFF = 101 V U = Measurement value D = Process value D = 27648 x U / 100 V U = D x 100 V / 27648 Range Alarm ON = -5V ; OFF = -3V
	102.9984 V	28477	0x6F3D	Overloading	
	100.0036 V	27649	0x6C01		
	100.0000 V	27648	0x6C00	Nominal range	
	0.0000 V	0	0x0000		
	-0.0036 V	-1	0xFFFF	Underloading	
	-17.5926 V	-4864	0xED00		
	< -17.5926 V	-32768	0x8000	Underflow	

Asymmetric measurement ranges UR20-15AI-U-16-DIAG, user scale

Measurement range	Voltage (U)	Decimal (D)	Hexadecimal	Range	Conversion
0 ... 3 V	> 3.5277 V	32767	0x7FFF	Overflow	Range Alarm ON = 3.15 V ; OFF = 3.09 V U = Measurement value D = Process value S = User full scale value = Default 0x7FFF = 32767 O = User scale offset = Default 0x0000 = 0 D = (S - O) x U / 3 V + O U = (D - O) / (S - O) x 3 V Range Alarm ON = -0.15 V ; OFF = -0.09 V
	3.5277 V	D = (S - O) x U / 3 V + O		Overloading	
	3.0001 V				
	3.0000 V	S		Nominal range	
	0.0000 V	O			
	-0.0001 V	D = (S - O) x U / 3 V + O		Underloading	
	-0.5278 V				
	< -0.5278 V	-32768	0x8000	Underflow	
0 ... 5 V	> 5.8794 V	32767	0x7FFF	Overflow	Range Alarm ON = 5.25 V ; OFF = 5.15 V U = Measurement value D = Process value S = User full scale value = Default 0x7FFF = 32767 O = User scale offset = Default 0x0000 = 0 D = (S - O) x U / 5 V + O U = (D - O) / (S - O) x 5 V Range Alarm ON = -0.25V ; OFF = -0.15V
	5.8794 V	D = (S - O) x U / 5 V + O		Overloading	
	5.0002 V				
	5.0000 V	S		Nominal range	
	0.0000 V	O			
	-0.0002 V	D = (S - O) x U / 5 V + O		Underloading	
	-0.8796 V				
	< -0.8796 V	-32768	0x8000	Underflow	
0 ... 10 V	> 11.7589 V	32767	0x7FFF	Overflow	Range Alarm ON = 10.5 V ; OFF = 10.3 V U = Measurement value D = Process value S = User full scale value = Default 0x7FFF = 32767 O = User scale offset = Default 0x0000 = 0 D = (S - O) x U / 10 V + O U = (D - O) / (S - O) x 10 V Range Alarm ON = -0.5V ; OFF = -0.3V
	11.7589 V	D = (S - O) x U / 10 V + O		Overloading	
	10.0004 V				
	10.0000 V	S		Nominal range	
	0.0000 V	O			
	-0.0004 V	D = (S - O) x U / 10 V + O		Underloading	
	-1.7593 V				
	< -1.7593 V	-32768	0x8000	Underflow	
0 ... 30 V	> 35.2767 V	32767	0x7FFF	Overflow	Range Alarm ON = 31.5 V ; OFF = 30.9 V U = Measurement value D = Process value S = User full scale value = Default 0x7FFF = 32767 O = User scale offset = Default 0x0000 = 0 D = (S - O) x U / 30 V + O U = (D - O) / (S - O) x 30 V Range Alarm ON = -1.5V ; OFF = -0.9V
	35.2767 V	D = (S - O) x U / 30 V + O		Overloading	
	30.0011 V				
	30.0000 V	S		Nominal range	
	0.0000 V	O			
	-0.0011 V	D = (S - O) x U / 30 V + O		Underloading	
	-5.2778 V				
	< -5.2778 V	-32768	0x8000	Underflow	
0 ... 100 V	> 102.9984 V	32767	0x7FFF	Overflow	Range Alarm ON = 102.9 V ; OFF = 101 V U = Measurement value D = Process value S = User full scale value = Default 0x7FFF = 32767 O = User scale offset = Default 0x0000 = 0 D = (S - O) x U / 100 V + O U = (D - O) / (S - O) x 100 V Range Alarm ON = -5V ; OFF = -3V
	102.9984 V	D = (S - O) x U / 100 V + O		Overloading	
	100.0036 V				
	100.0000 V	S		Nominal range	
	0.0000 V	O			
	-0.0036 V	D = (S - O) x U / 100 V + O		Underloading	
	-17.5926 V				
	< -17.5926 V	-32768	0x8000	Underflow	

6.61 Strain gauge module UR20-2AI-SG-24-DIAG

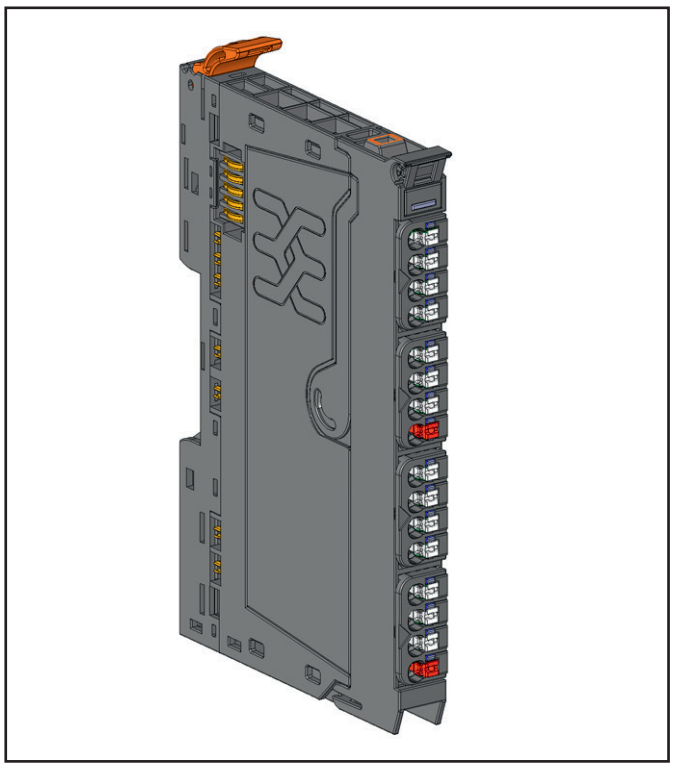

Strain gauge module UR20-2AI-SG-24-DIAG (Item No. 1990070000)

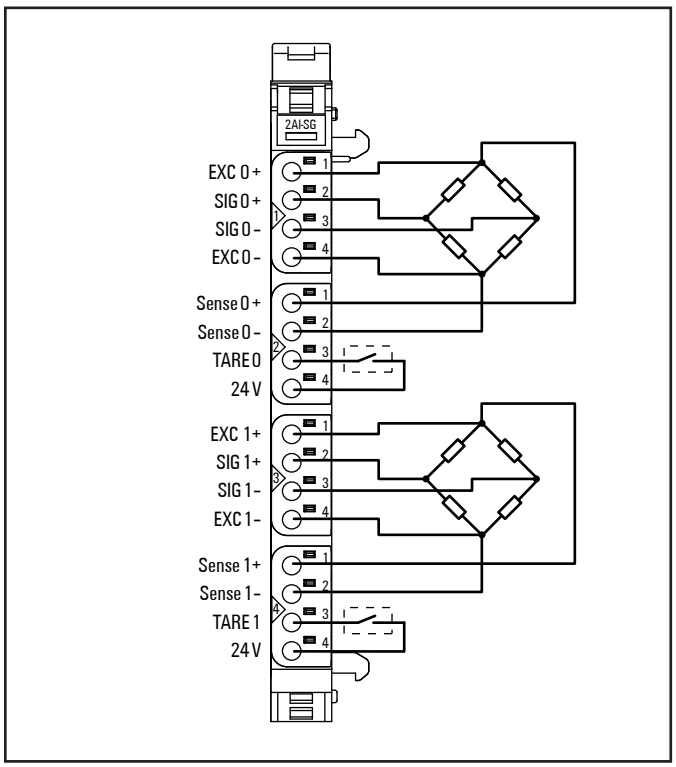

Connection diagram UR20-2AI-SG-24-DIAG

The UR20-2AI-SG-24-DIAG strain gauge module is an analogue input module designed to connect force sensors working with strain gauges. Thus weights, torques or vibrations can be excactly measured. Via parameterising the module can be calibrated. Using the web server the module can be calibrated password protected, the calibration setting will then be documented. The tare function can be triggered individually for each channel either via a digital input or via software.
Several sensors can be connected in parallel to each of the two channels in 4-wire or 6-wire technique as long as their input impedance is within the permissible sensor load. The resolution is 24 bit per channel with a 0.01% accuracy of the full scale.
A status LED is assigned to each channel. The module electronics supply the connected sensors with power from a potential that is galvanic isolated from the input current path (I_{IN}).
The inputs are protected against voltage surges and over current. Voltages that exceed ±30 V may cause the destruction of the module.
The module provides single channel diagnosis with channel related error diagnostic and line break detection.

Interruption of the power supply for less than 1 ms has no impact. In the case of longer interruptions the bus communication will be shut off.

	Assignment	Function/connection
1.1	EXC 0 +	AI0: Excitation +
1.2	SIG 0 +	AI0: Signal +
1.3	SIG 0 –	AI0: Signal –
1.4	EXC 0 –	AI0: Excitation –
2.1	Sense 0 +	AI0: Sense +
2.2	Sense 0 –	AI0: Sense –
2.3	TARE 0	DI0: Digital input (tare)
2.4	24 V	DI0: 24 V DC (for the digital input only)
3.1	EXC 1 +	AI1: Excitation +
3.2	SIG 1 +	AI1: Signal +
3.3	SIG 1 –	AI1: Signal –
3.4	EXC 1 –	AI1: Excitation –
4.1	Sense 1 +	AI1: Sense +
4.2	Sense 1 –	AI1: Sense –
4.3	TARE 1	DI1: Digital input (tare)
4.4	24 V	DI1: 24 V DC (for the digital input only)

ATTENTION

The module can be destroyed!
Connections 1.4 (EXC 0 -) and 3.4 (EXC 1 -) are using a common potential.
► Realise the wiring in such a way that no compensating current will flow through the module.



	Module status LED Green: Communication over the system bus Red: Error
1.1	Red: diagnosis at input 0
2.3	Yellow: digital input 0 active
3.1	Red: diagnosis at input 1
4.3	Yellow: digital input 1 active

LED indicators UR20-2AI-SG-24-DIAG, troubleshooting Chapter 12

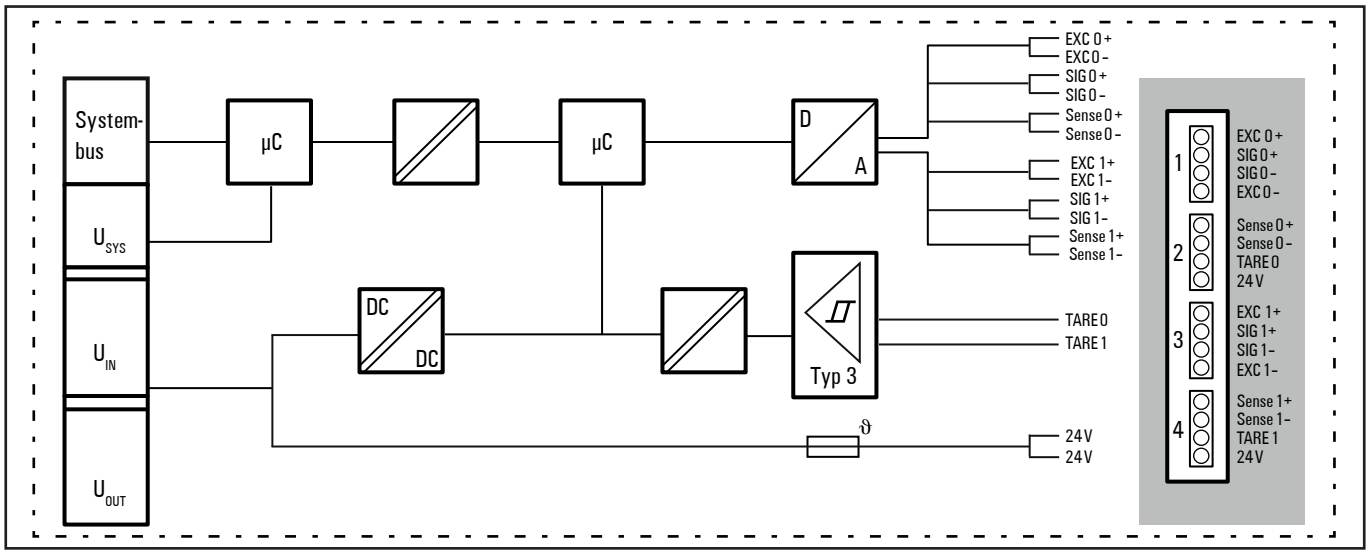

Block diagram UR20-2AI-SG-24-DIAG

Technical data UR20-2AI-SG-24-DIAG (Item No. 1990070000)

System data	
Data	Process, parameter and diagnostic data depend on the coupler used, see coupler description.
Interface	u-remote system bus
System bus transfer rate	48 Mbps
Analogue inputs	
Number	2
Sensor connection	4-wire, 6-wire, parameterisable
Input value	differentially, to evaluate a strain gauge full bridge
Conversion time	5 ... 800 ms, parameterisable
Conversion rate	1.25 ... 200 samples per second
Conversion method	Sigma-Delta
Operation mode	continious conversion
Bandwidth input filter	> 500 Hz (3 dB)
Resolution	24 Bit per channel
Data type output	32 Bit signed integer
Measurement range	± 150 mV
Supported sensor sensitivity	0.5 ... 30 mV/V, parameterisable
Overload	> 5 %
Output on overload	0x7FFFFFFF
Input impedance signal	> 100 MΩ
Input impedance sense	> 200 kΩ
Accuracy (customer calibration)[1)]	±0.01 % FSR (100 ppm)
Accuracy (factory calibration)[1)]	±0.05 % FSR (500 ppm)
Accuracy (-20 °C ... 60 °C)[1)]	
Accuracy during interference	±1 % FSR
Temperature coefficient	< 5 ppm/K
Nonlinearity	< 50 ppm
Repeat accuracy (after 2 h of operation)	< 20 ppm
Common mode rejection ratio (CMRR) at 2,5 V dc ±1,5 V/ 50 Hz[1)]	> 120 dB
Crosstalk attenuation	> 120 dB
Insulation rated voltage between power path and bus	50 V DC
Insulation rated voltage between power path and signal	50 V DC
Sensor excitation voltage	5 V DC ± 0.2 V
Permissible sensor load	85 ... 5000 Ω
Short-circuit proof	yes
Module diagnosis	yes
Individual channel diagnosis	yes, line break detection, short circuit detection, overload
Common potential between channels	EXC 0- and EXC 1-
Calibration interval	max. 1 year
Calibration capability	yes

1) With conversion time ≥ 80ms and sensor sensitivity >2 mV/V

Technical data UR20-2AI-SG-24-DIAG (Item No. 1990070000)

Digital inputs	
Number	2
Input type	Type 1 and type 3 according to IEC 61131-2
Input filter	10 ms fixed
Input voltage low	< 5 V
Input voltage high	> 11 V
Permissible load of auxiliary voltage	< 10 mA
Supply	
Supply voltage	24 V DC +20%/-15%
Current consumption from system current path I_{SYS}	8 mA
Current consumption from input current path I_{IN}	< 35 mA (75 mA at nominal load)
General data	
Weight (operational status)	90 g
For additional gereral data see section 3.4	

1) With conversion time ≥ 80ms and sensor sensitivity >2 mV/V

Overview of the editable parameters UR20-2AI-SG-24-DIAG

Channel	Description	Options[1)]	Default
0 ... 1	Connection type[2)]	4-wire (0) / 6-wire (1)	6-wire
0 ... 1	Conversion time[2)]	800 ms (0) / 400 ms (1) / 240 ms (2) / 160 ms (3) / 80 ms (4) / 20 ms (5) / 10 ms (6) / 5 ms (7)	80 ms
0 ... 1	Channel diagnosis	disabled (0) / enabled (1)	disabled
0 ... 1	Tare function	disabled (0) / via digital input (1) / via software (2) / via digital input AND software (3) / via digital iput OR software (4)	via digital input
0 ... 1	Sensor sensitivity[2)]	500.000 ... 960.000.000	4.000.000
0 ... 1	Full scale value[2)]	-2.147.483.648 ... 2.147.483.647	1.000.000.000
0 ... 1	Offset[2)]	-2.147.483.648 ... 2.147.483.647	0

1) Values in brackets for Modbus-TCP (firmware version 02.00.00 and higher), CANopen, EtherCAT and EtherNet/IP via module parameter class
2) Parameter is frozen during calibration. Changing the parameter has then no impact on the measuring value.

Tare function

The "Tare function" parameter determines how a tare adjustment is initiated and whether a logic operation should exist. The automatic tare is dominant over the manual tare.

Tare adjustment

The measured value can be calculated with a constant value, for example to display only the net value. There are two procedures for the adjustment :
Automatic tare: The current measured value is saved and immediately subtracted from the display value.
Manual tare: An analogue value is transmitted via the process data and subtracted from the displayed value.
Only one tare value is saved for each channel, a new setting of the value overwrites the old one.

Sensor sensitivity

Manufacturer data multiplied by 10^6.
Example: Manufacturer data 2.5 mV/V
Input: 2.500.000

Full scale value

Value displayed at 100% sensor load.
Example: Nominal load 100 kg
With full scale value 100.000 the value is displayed in g.
With full scale value 100 the value is displayed in kg.

Diagnosis data UR20-2AI-SG-24-DIAG

Name	Byte	Bit	Description	Default
Error indikator	0	0	Module error	
		1	Internal error	
		2	External error	
		3	Channel error	0
		4	Error	
		5	Reserved	0
		6	Reserved	0
		7	Parameter error	
Module type	1	0	Module Type	0x05
		1		
		2		
		3		
		4	Channel information available	1
		5	Reserved	0
		6	Reserved	0
		7	Reserved	0
Error byte 2	2	0 ... 7	Reserved	0
Error byte 3	3	0 ... 2	Reserved	0
		3	Internal diagnostic FIFO full	
		4	Power supply fault	0
		5	Reserved	0
		6	Process Alarm lost	0
		7	Reserved	0
Channel type	4	0	Channel type	0x74
		1		
		2		
		3		
		4		
		5		
		6		
		7	Reserved	0
Diagnostic bits per channel	5		Number of diagnostic bit per channel	8
Nomber of channels	6		Number of similar channels per module	2
Channel error	7	0	Error at channel 0	0
		1	Error at channel 1	0
		2 ... 7	Reserved	0
	8 ... 10	8 ... 31	Reserved	0
Error channel 0	11	0	Parameter Error	0
		1	Overload	0
		2	Reserved	0
		3	Short circuit	0
		4	Line break	0
		5 ... 7	Reserved	0

Diagnosis data UR20-2AI-SG-24-DIAG

Name	Byte	Bit	Description	Default
Error channel 1	12	0	Parameter Error	0
		1	Overload	0
		2	Reserved	0
		3	Short circuit	0
		4	Line break	0
		5 ... 7	Reserved	0
Error channel 2	13	0 ... 7	Reserved	0
...	...			
Error channel 31	42			
Time stamp	43 ... 46		time stamp [µs] (32bit)	

Process data inputs UR20-2AI-SG-24-DIAG

Byte	Bit	Format	Description
IB0	-	int32	AI0 input value
IB1			
IB2			
IB3			
IB4	-	int32	AI1 input value
IB5			
IB6			
IB7			
IB8	0	Byte	DI0 status digital input (tare)
	1		DI1 status digital input (tare)
	2 ... 7		reserved
IB9	0 ... 7	Byte	reserved
IB10	0 ... 7	Byte	reserved
IB11	0 ... 7	Byte	reserved
IB12	0 ... 7	Byte	reserved
IB13	0 ... 7	Byte	reserved
IB14	0 ... 7	Byte	reserved
IB15	0 ... 7	Byte	reserved

Process data outputs UR20-2AI-SG-24-DIAG

Byte	Bit	Format	Description
QB0	-	int32	AI0 manual tare value
QB1			
QB2			
QB3			
QB4	-	int32	AI1 manual tare value
QB5			
QB6			
QB7			
QB8	0	Byte	AI0 automatic tare[1)]
	1		AI0 manual tare[1)]
	2		AI0 internal calibration[1)]
	3 ... 7		reserved
QB9	0	Byte	AI1 automatic tare[1)]
	1		AI1 manual tare[1)]
	2		AI1 internal calibration[1)]
	3 ... 7		reserved
QB10	0 ... 7	Byte	reserved
QB11	0 ... 7	Byte	reserved
QB12	0 ... 7	Byte	reserved
QB13	0 ... 7	Byte	reserved
QB14	0 ... 7	Byte	reserved
QB15	0 ... 7	Byte	reserved

1) The process starts with a positive edge of the process value.

Calibration

Best results on calibration can be achieved with:
- high sensor sensitivity
- long conversion time
- low input impedance of the sensor
- thermic adjusted installation (>2 h)

The reference weight/calibration standard should be approximately 70 – 100 % of the scales/sensors maximum nominal value.

Calibrating the module (from SW version 01.00.06 on)

Precondition: All sensors are installed operable, connected to the UR20-2AI-SG-24-DIAG module and not loaded.
To calibrate the module you have to align first the zero position and then the measurement range. The calibration via web server is described below as an example. You can also perform the calibration using the engineering system.

1. Adjusting the zero position

► Start the web server and open the module view of the UR20-2AI-SG-24-DIAG.
► Enter the measuring value shown in the web server into the field „Offset“.

The measuring value is set to zero.

2. Aligning the measurement range

► Place the calibration standard (e.g. reference weight) on the sensor.

The displayed measuring value can deviate from the value of calibration standard.

► Calculate the correction factor for the sensor sensitivity: correction factor = displayed value/calibration normal.
► Multiply the set sensor sensitivity by the correction factor.
► Enter the calculated value into the field „Sensor sensitivity“.
► Divide the value of the field „Offset“ by the correction factor.
► Enter the calculated value into the field „Offset“.

The calibration standard will now be displayed as measurement value.

Legal calibraton of the module

Legal calibration is a password protected, user guided calibration documented by a calibration sheet (see „Retreiving the calibration sheet“ on page 643).

The following parameters are affected by the calibration:

- Connection type
- Conversion time
- Offset
- Sensor sensitivity
- Full scale value

These parameters are frozen on calibration. That means, they can later be changed but this has no effect on the module.

The two channels can only be calibrated one after the other.

There is no password set upon delivery. At the beginning of the certification process you have to set a password. This will be saved in the module, it applies to both channels. The password can later be changed. Deleting the password is only possible on deleting the calibration.

All calibration data as well as the password will be deleted on firmware update!

► Start the web server.
► Open the module view for the UR20-2AI-SG-24-DIAG.



Module view for UR20-2AI-SG-24-DIAG in the web server

► Click on „Calibration“.

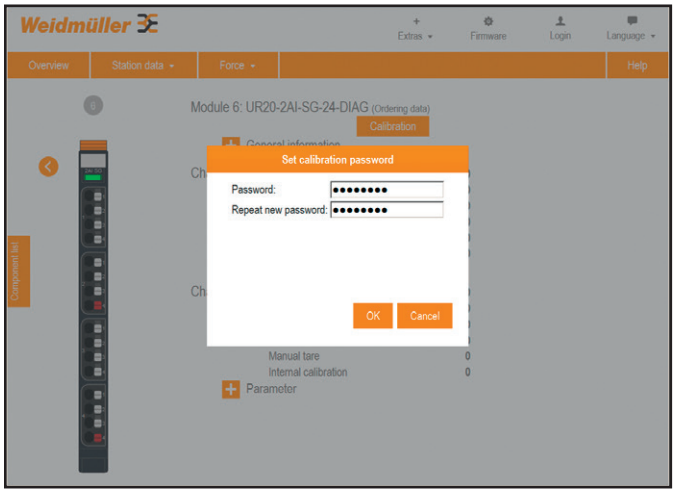

Setting the calibration password

► Define a password (7 to 10 characters, with at least one capital letter and one number).
► Repeat the password and click OK.

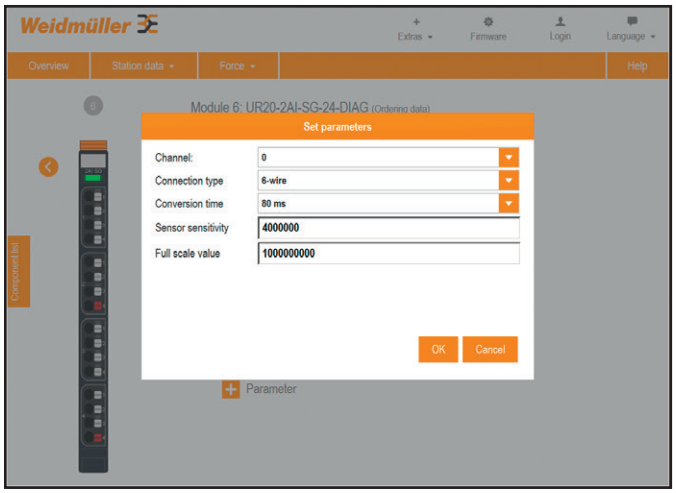

Setting the calibration parameters

► Choose the channel, the connection type and the conversion time and enter the sensor sensitivity as well as the full scale value (sensor sensitivity and full scale value see parameters).
► Click OK.

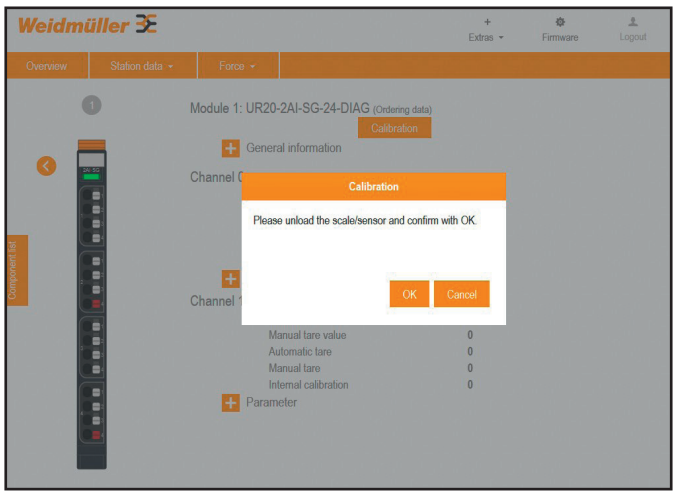

Releasing the sensor

► If not already done, please release the scale/sensor and click OK.

Thereby you have done the zero position alignment of the unloaded scale/sensor.

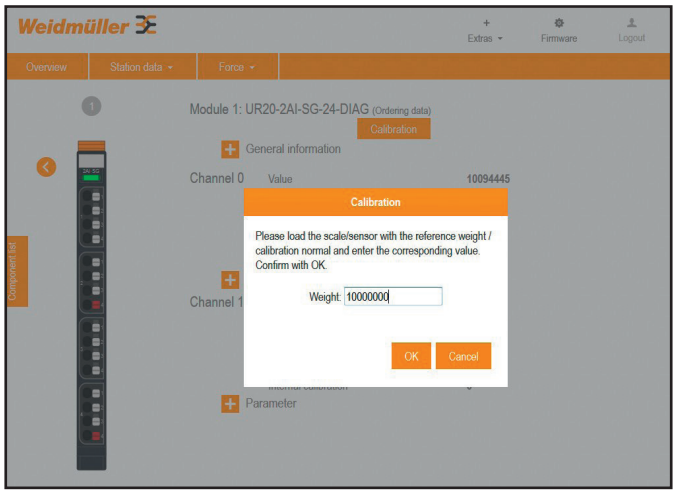

Entering the reference weight

► Load the scale/the sensor with the reference weight/calibration standard and enter the appropriate nominale value. This value should be given in the same dimension as the full scale value.

► Click OK.

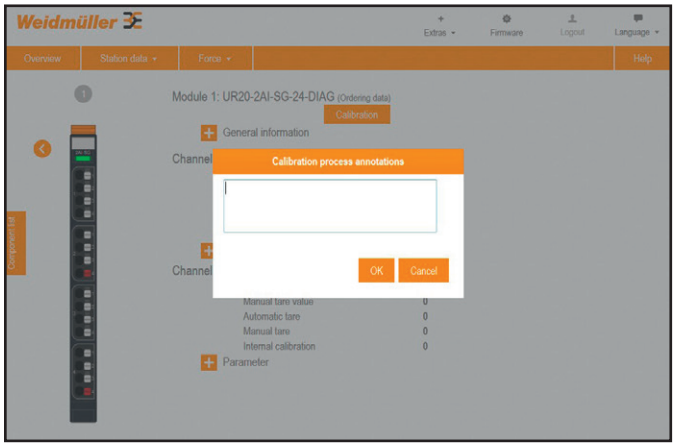

Entering a comment to the calibration

► You can enter a comment (max. 150 characters) into the free text field. This text will be printed on the calibration sheet.

► Click OK.

The subsequent confirmation shows that the calibration has been successfull.

► Close the window.

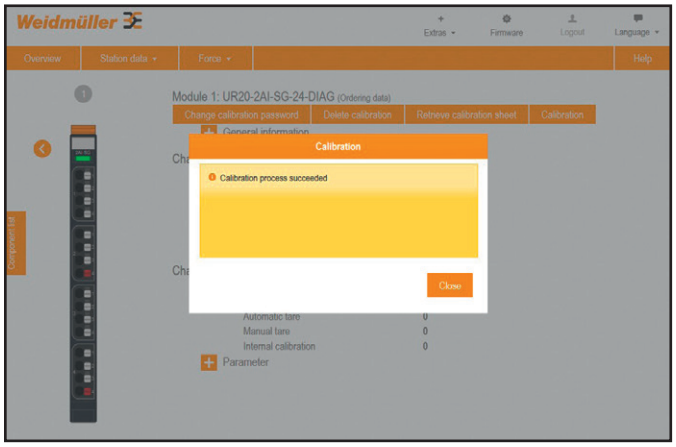

Web server view after successful calibration

New buttons are displayed in the web server after a calibration has been proceeded:

- Change calibration password
- Delete calibration
- Retrieve calibration sheet

Retrieving the calibration sheet

► Click on “Retrieve calibration sheet” to call up the calibration sheet.

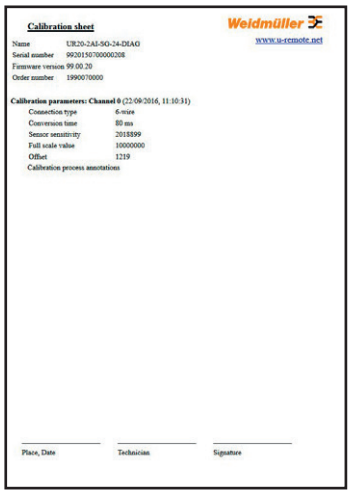
Calibration sheet

Weidmüller
www.u-remote.net

Name UR20-2AI-SG-24-DIAG
Serial number 99201507000000208
Firmware version 99.00.20
Order number 1990070000

Calibration parameters: Channel 0 (22/09/2016, 11:10:31)
Connection type 6-wire
Conversion time 80 ms
Sensor sensitivity 2018599
Full scale value 10000000
Offset 1219
Calibration process annotations

Place, Date | Technician | Signature

Calibration sheet

The calibration sheet contains the following information:
- Date and time of the calibration
- Parameter settings
- Comments on the calibration
- Serial number and firmware version of the module
- Order number and name of the module

► To save the calibration sheet and close the window click OK.

The calibration sheet can be saved as a PDF file. Therefore a PDF printer must be installed.

Changing the calibration password

► To change the password click on “Change the password”
► Enter the old password and enter the new password twice.
► Click OK.

The password has been changed.

Deleting the calibration

On deleting a calibration the corresponding password will be deleted as well.

► To delete a calibration, click on “Delete calibration”.
► Enter the password and click OK.

The calibration as well as the password will be deleted.

6.62 Power measurement module UR20-3EM-230V-AC

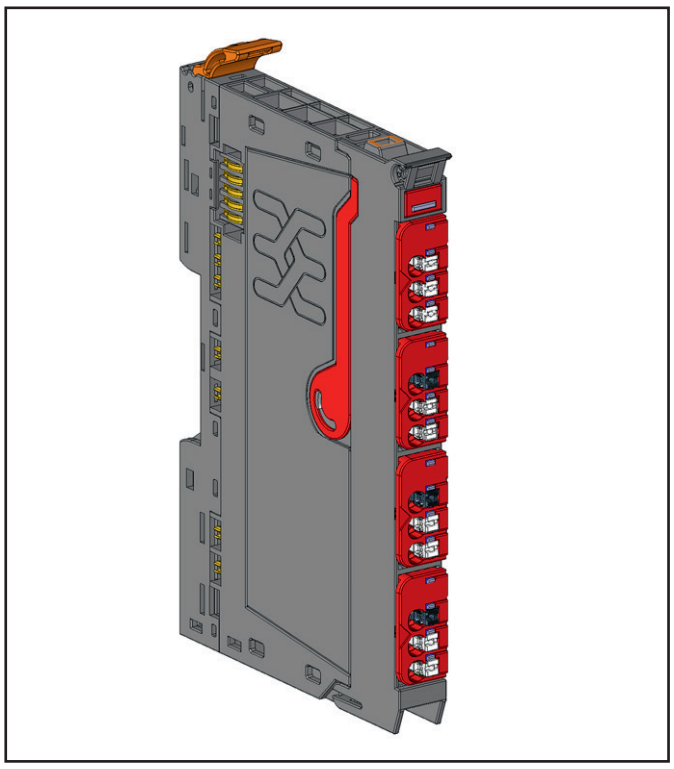

Power measurement module UR20-3EM-230V-AC (Item No. 2007420000)

The power measurement module UR20-3EM-230V-AC can measure and process all relevant measurands of one or three phase current consumers (up to 500 V AC phase-to-phase voltage):

- Current (RMS/average/peak)
- Voltage (RMS/average)
- Reactive, apparent and active power
- Power consumption
- Power factor
- Frequency
- Voltage upper and lower alarm
- Current upper and lower alarm

Currents up to 5 A can be measured directly with the module. Due to the measuring in the phase conductor the current can be measured in a star as well as a delta connection without further external components. The raw measured values are transferred via the connected fieldbus to a superior PLC or a control system.

The module delivers data to the fieldbus via eight data channels (16 bit each). The data are updated within one millisecond from the module to the coupler. The content of each data channel can be chosen from 55 registers (currents, voltage, power factor, frequency as well as power and energy measurings). Additionally limits can be parameterised the exceeding of which will trigger process alarms.

Up to three neutral conductors (N) can be connected with the first connector. One phase conductor (at LX) and one 1 A conductor (at LX' 1A) or one 5 A conductor (at LX' 5A) can be connected to each of the other three connectors.

The three current measurement connections can be used concurrently all for the same measurment range (1 A or 5 A) only. The mains connection must be fused with 1 A/5 A respectively.

A status LED is assigned to each channel.

⚠ WARNING

Possible danger to life!

► Always disconnect the power supply to the station before working with the module and secure the station against being switched on again.

⚠ WARNING

Possible danger to life!

The touch-safe protection of this module is only provided with the DIN rail earthed properly.

► Make sure that the DIN rail is connected to PE by earth terminals before commissioning the module.

ATTENTION

The module can be destroyed by overload!

► The measurement connections L1', L2' and L3' are internally connected to L1, L2, and L3 via a shunt. Neutral conductors must not be connected to L1', L2' and L3'!

► The module is temporary overload-capable (max. 5 seconds up to the fivefold current). Make sure that there will be no higher current peaks (e.g. by saturating the transformer)!

ATTENTION

The module can be destroyed by a hot swap.

► Make sure that the input contacts are voltage-free before carrying out a hot swap of the electronic unit.

In applications that provide no neutral conductor, the measurement is possible using only the three outer conductors. In this case the module builds a virtual zero point which reduces the accuracy by 1.5 % to 2.5 %.

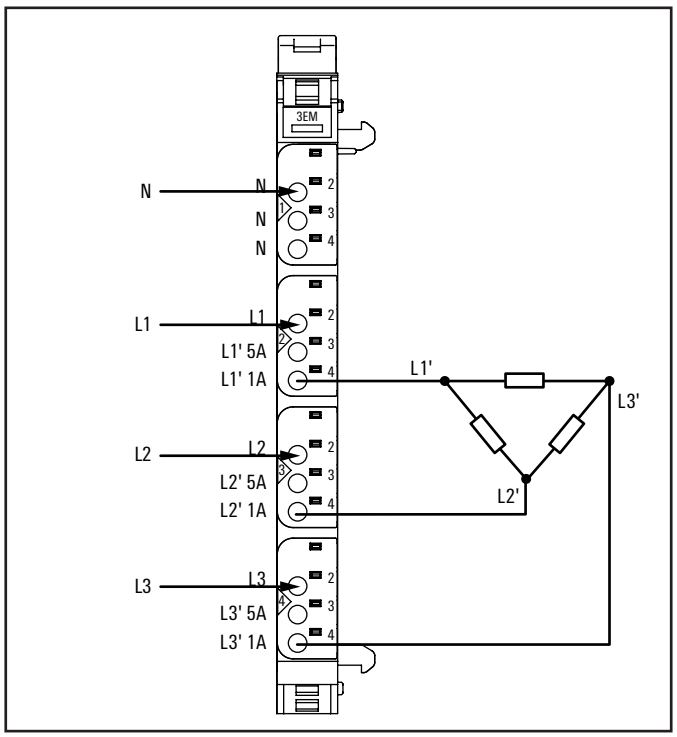

Connection diagram UR20-3EM-230V-AC: Delta connection (Example measurement 1 A)

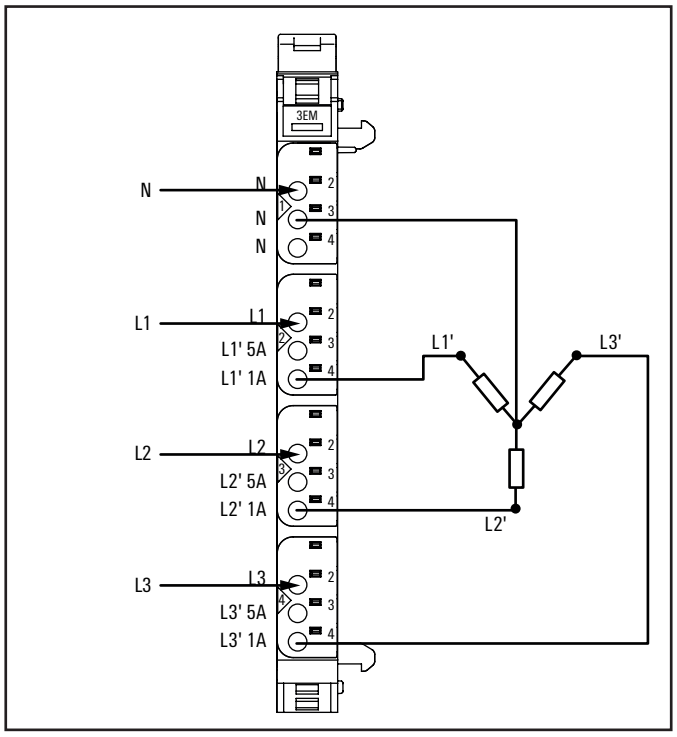

Connection diagram UR20-3EM-230V-AC: Star connection (Example measurement 1 A)

Application with current transformer

⚠ WARNING

Possible danger to life!

In case a current transformer is used for current measuring, the phase potential will be on its secondary winding. This results in a hazardous voltage at the transformer.

- ► Take care for an appropriate protection device (e.g. covering).
- ► In case further measuring devices shall be placed within the current measuring circuit the relevant standards must be regarded.

⚠ WARNING

Hazardous voltage on open current path!

- ► Never use a transformer in no-load operation.
- ► Always connect the transformer with the power measurement module **before** you start to operate the transformer.
- ► Never unlock the connector frame of the module during opreration with a transformer.

The measurement range of the module (1 A/5 A) can be extended by using a current transformer. The transformer must deliver a current of 1 A/5 A including internal resistance and conductor loop. This current has to be reflected into the internal measuring resistance. This is only possible by connecting one end of the secondary winding with the respective phase and the other end with the respective current output 1 A/5 A (see connection diagrams with current transformer).

If a current transformer is used, the conductors must be protected by fuses of the following specification (see connection examples with current transformer):

- Nominal current up to 1 A or less
- Nominal voltage > mains voltage

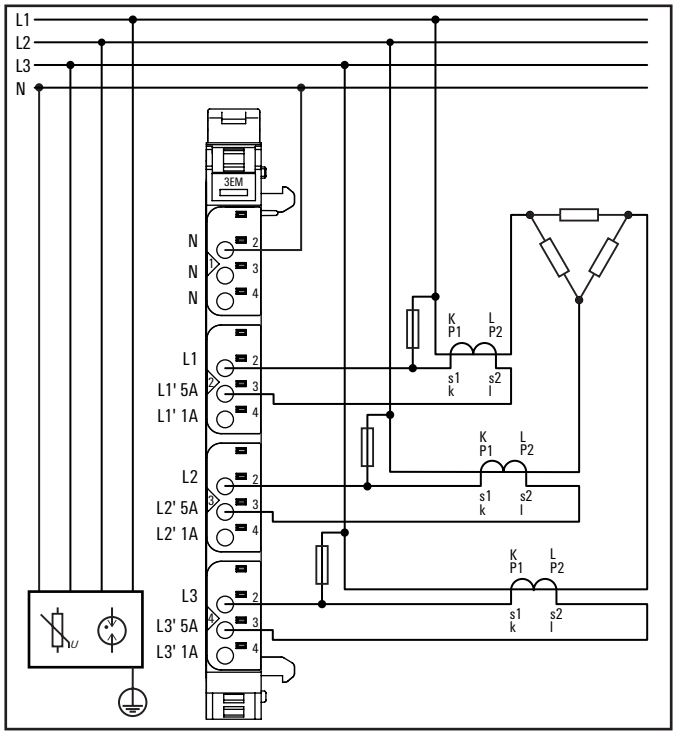

Connection diagram UR20-3EM-230V-AC: Delta connection with current transformer > 5 A (Example)

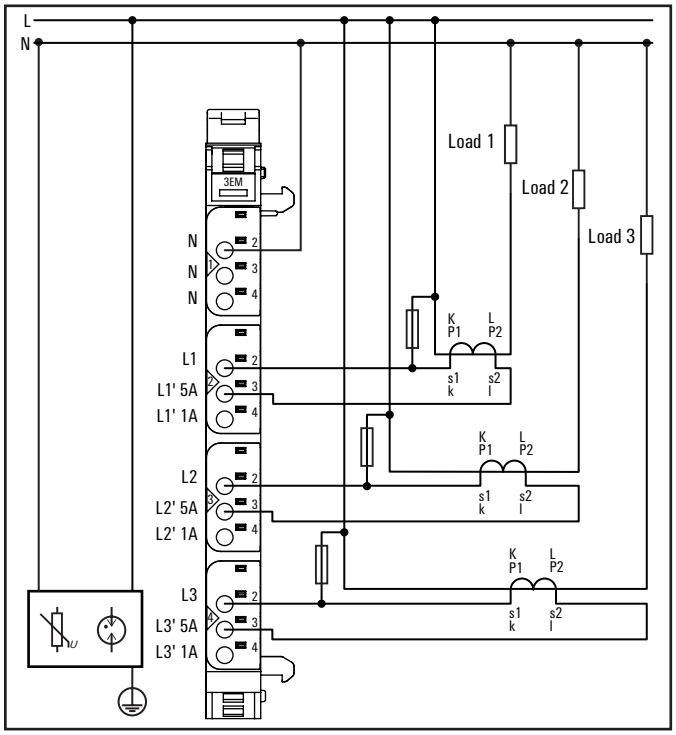

Connection diagram UR20-3EM-230V-AC: Single phase measurement with current transformer

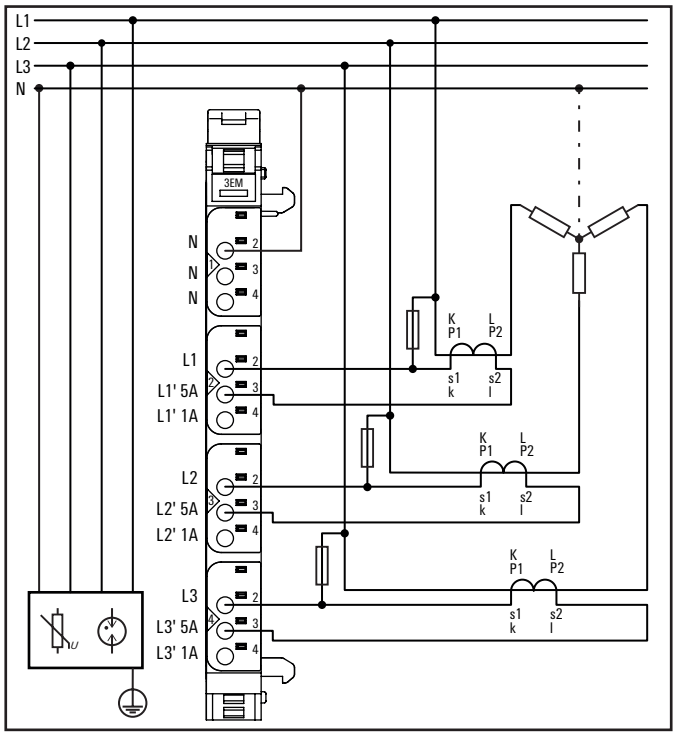

Connection diagram UR20-3EM-230V-AC: Star connection with measuring current transformer > 5 A (Example)

If the module is used in an environment of overvoltage category III, transient overvoltages must be limited to ≤ 2500 V. We recommend using the following Weidmüller products:

- VPU II 3+1 280V/40kA (Item No. 1352650000)
- VPU II 3+1 R 280V/40kA (Item No. 1352670000)
- VPU III 3/280V (Item No. 1393050000)



	Module status LED Green: Communication over the system bus Red: Error
2.2	Yellow: Voltage >70 V at L1 Yellow flashing: Running light with 3.2 and 4.2 indicates the phase sequence
2.3	Red: (parameterised) current alarm limit[1] exceeded
2.4	Red: (parameterised) voltage alarm limit[2] exceeded
3.2	Yellow: Voltage >70 V at L2 Yellow flashing: Running light with 2.2 and 4.2 indicates the phase sequence
3.3	Red: (parameterised) current alarm limit[1] exceeded
3.4	Red: (parameterised) voltage alarm limit[2] exceeded
4.2	Yellow: Voltage >70 V at L3 Yellow flashing: Running light with 2.2 and 3.2 indicates the phase sequence
4.3	Red: (parameterised) current alarm limit[1] exceeded
4.4	Red: (parameterised) voltage alarm limit[2] exceeded
	1) Max. nominal input current 1 A bzw. 5 A 2) Max. nominal input voltage 300 V

LED indicators UR20-3EM-230V-AC, troubleshooting see Chapter 12

The yellow LEDs for 2.2, 3.2 and 4.2 are not displayed correctly in the Webserver.

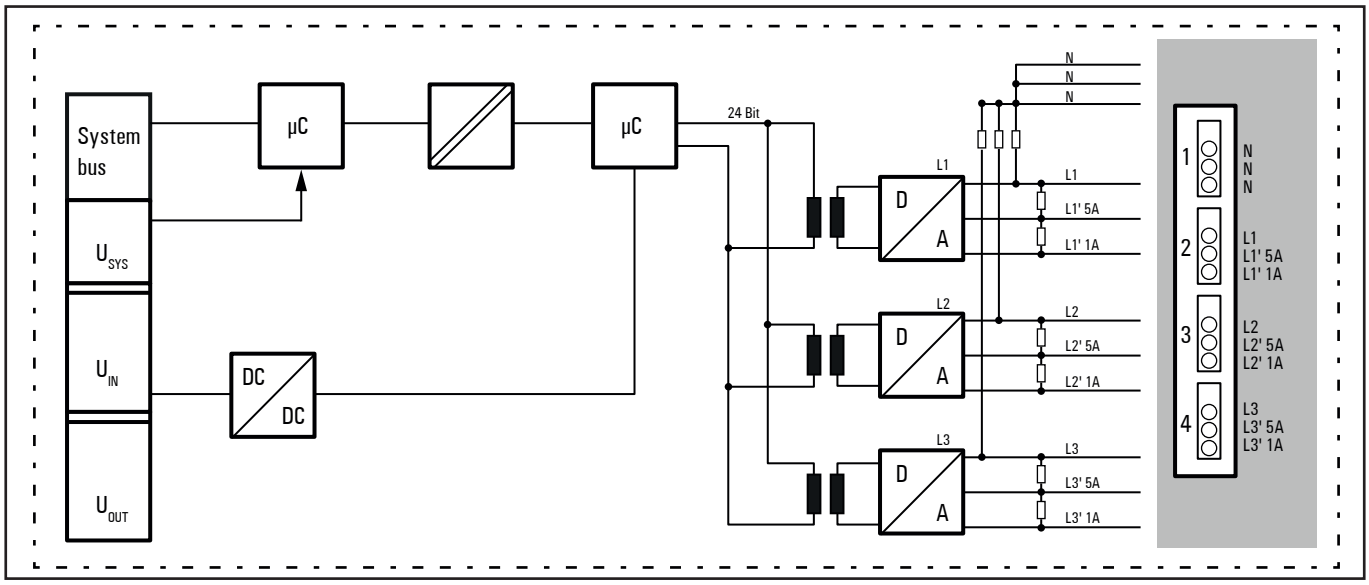

Block diagram UR20-3EM-230V-AC

Technical data UR20-3EM-230V-AC (Item No. 2007420000)

System data	
Data	Process, parameter and diagnostic data depend on the coupler used, see coupler description.
Interface	u-remote system bus
System bus transfer rate	48 Mbps
Connections	
Number	3 Neutral conductors
	3 Phase conductors (voltage measurement)
	3 Phase conductors (current measurement 5 A)
	3 Phase conductors (current measurement 1 A)
Nominal input voltage[1]	0 ... 300 V_{eff} AC (L–N); one or three phase measurement
Rated voltage	300 V_{eff} AC (L–N), 520 V_{eff} AC (L–L)
Nominal input current	max. 1 A at measuring connection L' 1 A (current measurement in the phase conductor)
	max. 5 A at measuring connection L' 5 A (current measurement in the phase conductor)
Sampling rate	3300 Samples/s
Resolution (per channel)	16 Bit (internally 24 Bit)
Frequency range	45 ... 65 Hz
Limiting frequency of the input filter[2]	typ. 4,5 kHz
Harmonics analysis	Visualisation for the first 31 harmonics
Isolation	3,0 kV_{eff} (1 min)
Rated impulse voltage	4 kV
Overvoltage category	II (acc. IEC 61010-1)
Measuring procedure	True RMS in conjunction with high resolution Delta Sigma converter
Measuring accuracy[3]	0,5% for measured values relative to the upper limit of effective range (U/I) 1% for calculated values
Temperature coefficient	U, I: 150 ppm/K
Tolerance on disturbing influence	
Conducted disturbances	EN 61000-4-6/IEC 61000-4-6 < ±10.0%
Input impedance	2,4 MΩ per channel
Measuring shunt	4 mΩ (at 5 A), 44 mΩ (at 1 A)
Supply	
Supply voltage	24 V DC +20%/-15%
Current consumption from system current path I_{SYS}	8 mA
Current consumption from input current path I_{IN}	12 mA
General data	
Weight (operational status)	87 g
ATEX/UKEX conform	No
For additional general data, see Section 3.4	

1) Nominal input voltage with corner-grounded systems: 0 ... 200 V_{eff} AC
2) Typical frequency curve for current and voltage measurement see page 656
3) Current and voltage values within each phase are measured and are available with 0.5% accuracy. All other results are based on the noted measuring values and are available with 1% accuracy.

Overview of the editable parameters UR20-3EM-230V-AC (Order according to web server)

Name	Options[1)]	Description / data width	Default
Current neasurement range	1 A (0) / 5 A (1)	1 Bit	1 A
Harmonic select	1 ... 31 (1 ... 31)	Selection of Harmonic, valid for all Harmonic measurements (min. 6 Bit)	1 = fundamental
Voltage alarm lower limit enable	disabled (0) / enabled (1)	1 Bit	disabled
Voltage alarm lower limit	0 ... 300 V (0 ... 27648)	Positive, absolute values only (16 Bit)	0 = 0x0
Voltage alarm upper limit enable	disabled (0) / enabled (1)	1 Bit	disabled
Voltage alarm upper limit	0 ... 300 V (0 ... 27648)	Positive, absolute values only (16 Bit)	300 V = 0x6C00
Current alarm lower limit enable	disabled (0) / enabled (1)	1 Bit	disabled
Current alarm lower limit	0 ... 5 A (0 ... 27648)	Positive, absolute values only (16 Bit)	0 = 0x0
Current alarm upper limit enable	disabled (0) / enabled (1)	1 Bit	disabled
Current alarm upper limit	0 ... 5 A (0 ... 27648)	Positive, absolute values only (16 Bit)	100% = 0x6C00
Current imbalance alarm enable	disabled (0) / enabled (1)	1 Bit	disabled
Current imbalance alarm limit	0 ... 100% (0 ... 16383)	16 Bit	100%
Frequency alarm lower limit enable	disabled (0) / enabled (1)	1 Bit	disabled
Frequency alarm lower limit	45 ... 65 Hz (5760 ... 8320)	16 Bit	45 Hz
Frequency alarm upper limit enable	disabled (0) / enabled (1)	1 Bit	disabled
Frequency alarm upper limit	45 ... 65 Hz (5760 ... 8320)	16 Bit	65 Hz
Power factor alarm enable	disabled (0) / enabled (1)	1 Bit	disabled
Power factor alarm lower limit	0 ... 1 (0 ... 16383)	Positive values only (16 Bit)	0
Diagnostic alarm	disabled (0) / enabled (1)	1 Bit	disabled
Channel 0 ... 7: Measuring value	RMS voltage L1 (0) / L2 (1) / L3 (2)	RMS voltage U_{eff} of the selected phase against N	
	RMS voltage average (3)	Average RMS voltage $\bar{U}_{eff}$ of the selected phase against N	
	RMS current L1 (4) / L2 (5) / L3 (6)	RMS current $\bar{I}_{eff}$ of the selected phase	
	RMS current average (7)	Average RMS current $\bar{I}_{eff}$ of all connected phases	
	Peak current L1 (8) / L2 (9) / L3 (10)	Peak current during last accumulation interval	
	Line frequency (11)		
	Harmonic power L1 (12) / L2 (13) / L3 (14)	Harmonic power at the selected hamonic	
	Harmonic reactive power L1 (15) / L2 (16) / L3 (17)	Harmonic reactive power at the selected hamonic	
	Harmonic apparent power L1 (18) / L2 (19) / L3 (20)	Harmonic apparent power at the selected hamonic	
	Power factor L1 (21) / L2 (22) / L3 (23)	Ratio between the absolute value of the reactive power and the apparent power of the selected phase	
	Total power factor (24)		
	Harmonic voltage L1 (25) / L2 (26) / L3 (27)	Voltage at the selected hamonic	

1) Values in brackets for Modbus-TCP (firmware version 02.00.00 and higher), CANopen, EtherCAT and EtherNet/IP via module parameter class

Overview of the editable parameters UR20-3EM-230V-AC (Order according to web server)

Name	Options[1)]	Description / data width	Default
	Harmonic current L1 (28) / L2 (29) / L3 (30)	Current at the selected hamonic	
	Active power L1 (31) / L2 (32) / L3 (33)	Active power at the fundamental of the selected phase	
	Active power total (34)	Active power total at the fundamental of the connected phases	
	Reactive power L1 (35) / L2 (36) / L3 (37)	Reactive power at the fundamental	
	Reactive power total (38)	Reactive power total at the fundamental of the connected phases	
	Apparent power L1 (39) / L2 (40) / L3 (41)	Apparent power at the fundamental	
	Apparent power total (42)	Apparent power total at the fundamental of the connected phases	
	Received act. energy counter L1 (43) / L2 (44) / L3 (45)		
	Delivered act. energy counter L1 (46) /L2 (47) / L3 (48)		
	React. energy leading counter L1 (49) / L2 (50) / L3 (51)	Works only with “Harmonic select” = 1	
	React. energy lagging counter L1 (52) / L2 (53) / L3 (54)	Works only with “Harmonic select” = 1	
	Status (55)	Bit 0: 1 = Phase sequence L1-L2-L3 detected Bit 1: 1 = Phase sequence L1-L3-L2 detected Bit 2: 1 = Voltage at L1 Bit 3: 1 = Voltage at L2 Bit 4: 1 = Voltage at L3	
	disabled (56)	The channel becomes enabled by parameterising a measuring value	disabled

1) Values in brackets for Modbus-TCP (firmware version 02.00.00 and higher), CANopen, EtherCAT and EtherNet/IP via module parameter class

Please see more details for conversion in the table „Conversion of editable measuring values“ on page 653.

Calculation of reactive power

$$Q = \sqrt{S^2 - P^2}$$

Calculation of current imbalance

$$\text{Current imbalance} = \frac{\max(|I_{RMS}L1 - I_{RMS}Average|\ ,\ |I_{RMS}L2 - I_{RMS}Average|\ ,\ |I_{RMS}L3 - I_{RMS}Average|)}{I_{RMS}Average}$$

Diagnostic data UR20-3EM-230V-AC

Name	Byte	Bit	Description	Default
Error indicator	0	0	Module error	0
		1	Internal error	0
		2	External error	0
		3	Channel error	0
		4	Error	0
		5	Power supply fault	0
		6	Reserved	0
		7	Parameter error	0
Module type	1	0	Module Type 0x05	
		1		
		2		
		3		
		4	Reserved	1
		5	Reserved	0
		6	Reserved	0
		7	Reserved	0
Error byte 2	2	0 ... 7	Reserved	0
Error byte 3	3	0 ... 2	Reserved	0
		3	Internal diagnostic FIFO full	0
		4	Communication fault	0
		5	Reserved	0
		5	Reserved	0
		7	Reserved	0
Channel type	4	0	Channel type 0x75	0
		1		0
		2		1
		3		0
		4		1
		5		1
		6		1
		7	Reserved	0
Diagnostic bits per channel	5		Number of diagnostic bit per channel	8
Number of channels	6			3
Channel error	7	0	Error at channel 0	0
		1	Error at channel 1	0
		2	Error at channel 2	0
		3 ... 7	Reserved	0
	8 ... 10	8 ... 31	Reserved	0
Channel 0 error ... Channel 2 error	11 ... 13	0	Voltage overrange (300 V + 10%)	0
		1	Current overrange (I + 10%)	0
		2 ... 7	Reserved	0
Channel 3 error ... Channel 31 error	14 ... 42	0 ... 7	Reserved	0
Time stamp	43-46		time stamp [µs] (32bit)	

Process data inputs UR20-3EM-230V-AC

Byte	Format	Description
IB0	Word	Channel 0
IB1		
IB2	Word	Channel 1
IB3		
IB4	Word	Channel 2
IB5		
IB6	Word	Channel 3
IB7		
IB8	Word	Channel 4
IB9		
IB10	Word	Channel 5
IB11		
IB12	Word	Channel 6
IB13		
IB14	Word	Channel 7
IB15		

Process data outputs UR20-3EM-230V-AC

Byte	Bit	Description	Value
QB0	QX0.0	Reset counter of received active energy[1]	
	QX0.1	Reset counter of delivered active energy[1]	
	QX0.2	Reset counter of capacitive energy[1]	
	QX0.3	Reset counter of inductive reactive energy[1]	
	QX0.4	Reserved	
	QX0.5	Reserved	
	QX0.6	Reserved	
	QX0.7	Reserved	
QB1		Key for counter reset[2]	0xAF
QB2 ... QB15		Reserved	

1) The reset requires a rising edge.
2) The value must have been set before the reset is triggered.

Process alarm UR20-3EM-230V-AC

Name	Byte	Bit	Function
Alarm	0	0	Error at L1
		1	Error at L2
		2	Error at L3
		3	Voltage lower limit underrun
		4	Voltage upper limit exceeded
		5	Current lower limit underrun
		6	Current upper limit exceeded
		7	Power factor lower limit underrun
Alarm	1	0	Current unbalance
		1	Frequency lower limit underrun
		2	Frequency upper limit exceeded
		3 ...7	Not used
Time stamp	2 ... 3		The two lowest bytes of the internal 32-bit timer

Measuring ranges UR20-3EM-230V-AC

Measuring range	Value	Decimal (D)	Hexadecimal	Range	Conversion
RMS voltage L1 ... L3 (U) RMS voltage average (U) Harmonic voltage L1 ... L3 (U) Voltage lower/upper limit (U)	355.5 V_{RMS}	32767	0x7FFF	Overloading	
	300 V_{RMS}	27648	0x6C00	Nominal range	D = 27648 x U / 300 V_{RMS} U = D x 300 V_{RMS} / 27648
	150 V_{RMS}	13824	0x3600		
	0 V_{RMS}	0	0x0000		
[Current measuring range = 1 A] RMS current L1 ... L2 (I) RMS current average (I) Harmonic current (I) Current lower/upper limit (I)	1.185 A_{RMS}	32767	0x7FFF	Overloading	
	1 A_{RMS}	27648	0x6C00	Nominal range	D = 27648 x I / 1.0 A_{RMS} I = D x 1.0 A_{RMS} / 27648
	0.5 A_{RMS}	13824	0x3600		
	0 A_{RMS}	0	0x0000		
[Current measuring range = 5 A] RMS current L1 ... L2 (I) RMS current average (I) Harmonic current (I) Current lower/upper limit (I)	5.926 A_{RMS}	32767	0x7FFF	Overloading	
	5 A_{RMS}	27648	0x6C00	Nominal range	D = 27648 x I / 5.0 A_{RMS} I = D x 5.0 A_{RMS} / 27648
	2.5 A_{RMS}	13824	0x3600		
	0 A_{RMS}	0	0x0000		
[Current measuring range = 1 A] Peak current (I) Peaks occuring within the crest factor can be measured up to 8 A/40 A. The total RMS is furthermore 1 A /5 A.	9.481 A	32767	0x7FFF	Overloading	
	8.0 A	27648	0x6C00	Nominal range	D = 27648 x I / 8.0 A I = D x 8.0 A/ 27648
	4.0 A	13824	0x3600		
	0.0 A	0	0x0000		
[Current measuring range = 5 A] Peak current (I) Peaks occuring within the crest factor can be measured up to 8 A/40 A. The total RMS is furthermore 1 A /5 A.	47.406 A	32767	0x7FFF	Overloading	
	40.0 A	27648	0x6C00	Nominal range	D = 27648 x I / 40.0 A I = D x 40.0 A/ 27648
	20.0 A	13824	0x3600		
	0.0 A	0	0x0000		
Line frequency (f) Frequency alarm lower limit (f) Frequency alarm upper limit (f)	65 Hz	8320	0x2080	Nominal range	D = 128 x f [Hz] f = D / 128
	60 Hz	7680	0x1E00		
	50 Hz	6400	0x1900		
	45 Hz	5760	0x1680		
[Current measuring range = 1 A] Active power L1 ... L3 (P) Harmonic active power L1 ... L3 (P)	355.5 W	32767	0x7FFF	Overloading	
	300.0 W	27648	0x6C00	Nominal range	D = 27648 x P / 300.0 W P = D x 300.0 W/ 27648
	150.0 W	13824	0x3600		
	0.0 W	0	0x0000		
[Current measuring range = 5 A] Active power L1 ... L3 (P) Harmonic active power L1 ... L3 (P)	1777.7 W	32767	0x7FFF	Overloading	
	1500.0 W	27648	0x6C00	Nominal range	D = 27648 x P / 1500.0 W P = D x 1500.0 W/ 27648
	750.0 W	13824	0x3600		
	0.0 W	0	0x0000		

Measuring ranges UR20-3EM-230V-AC

Measuring range	Value	Decimal (D)	Hexadecimal	Range	Conversion
[Current measuring range = 1 A] Active power total (P)	1066.6 W	32767	0x7FFF	Overloading	
	900.0 W	27648	0x6C00	Nominal range	D = 27648 x P / 900.0 W P = D x 900.0 W / 27648
	450.0 W	13824	0x3600		
	0.0 W	0	0x0000		
[Current measuring range = 5 A] Active power total (P)	5333.2 W	32767	0x7FFF	Overloading	
	4500.0 W	27648	0x6C00	Nominal range	D = 27648 x P / 4500.0 W P = D x 4500.0 W / 27648
	2250.0 W	13824	0x3600		
	0.0 W	0	0x0000		
[Current measuring range = 1 A] Reactive power L1 ... L3(Q) Harmonic reactive power L1 ... L3(Q)	355.5 var	32767	0x7FFF	Overloading	
	300.0 var	27648	0x6C00	Nominal range	D = 27648 x Q / 300.0 var Q = D x 300.0 var / 27648
	150.0 var	13824	0x3600		
	0.0 var	0	0x0000		
[Current measuring range = 5 A] Reactive power L1 ... L3(Q) Harmonic reactive power L1 ... L3(Q)	1777.7 var	32767	0x7FFF	Overloading	
	1500.0 var	27648	0x6C00	Nominal range	D = 27648 x Q / 1500.0 var Q = D x 1500.0 var / 27648
	750.0 var	13824	0x3600		
	0.0 var	0	0x0000		
[Current measuring range = 1 A] Reactive power total (Q)	1066.6 var	32767	0x7FFF	Overloading	
	900.0 var	27648	0x6C00	Nominal range	D = 27648 x Q / 900.0 var Q = D x 900.0 var / 27648
	450.0 var	13824	0x3600		
	0.0 var	0	0x0000		
[Current measuring range = 5 A] Reactive power total (Q)	5333.2 var	32767	0x7FFF	Overloading	
	4500.0 var	27648	0x6C00	Nominal range	D = 27648 x Q / 4500.0 var Q = D x 4500.0 var / 27648
	2250.0 var	13824	0x3600		
	0.0 var	0	0x0000		
[Current measuring range = 1 A] Apparent power L1 ... L3 (S) Harmonic apparent power L1 ... L3 (S)	355.5 VA	32767	0x7FFF	Overloading	
	300.0 VA	27648	0x6C00	Nominal range	D = 27648 x S / 300.0 VA S = D x 300.0 VA / 27648
	150.0 VA	13824	0x3600		
	0.0 VA	0	0x0000		
[Current measuring range = 5 A] Apparent power L1 ... L3 (S) Harmonic apparent power L1 ... L3 (S)	1777.7 VA	32767	0x7FFF	Overloading	
	1500.0 VA	27648	0x6C00	Nominal range	D = 27648 x S / 1500.0 VA S = D x 1500.0 VA/ 27648
	750.0 VA	13824	0x3600		
	0.0 VA	0	0x0000		

Measuring ranges UR20-3EM-230V-AC

Measuring range	Value	Decimal (D)	Hexadecimal	Range	Conversion
[Current measuring range = 1 A] Apparent power total (S)	1066.6 VA	32767	0x7FFF	Overloading	
	900.0 VA	27648	0x6C00	Nominal range	D = 27648 x S / 900.0 VA S = D x 900.0 VA/ 27648
	450.0 VA	13824	0x3600		
	0.0 VA	0	0x0000		
[Current measuring range = 5 A] Apparent power total (S)	5333.2 VA	32767	0x7FFF	Overloading	
	4500.0 VA	27648	0x6C00	Nominal range	D = 27648 x S / 4500.0 VA S = D x 4500.0 VA/ 27648
	2250.0 VA	13824	0x3600		
	0.0 VA	0	0x0000		
Power factor (PF) Unsigned absolute value; the sign can be get from the harmonic power.	1.000	16383	0x3FFF	Nominal range	D = 16383 x PF PF = D / 16383
	0.750	12287	0x2FFF		
	0.500	8191	0x1FFF		
	0.000	0	0x0000		
Current imbalance alarm limit (CI)	1.000	16383	0x3FFF	Nominal range	D = 16383 x CI CI = D / 16383
	0.750	12287	0x2FFF		
	0.500	8191	0x1FFF		
	0.000	0	0x0000		
Received active energy counter (E)	32766 Wh	32766	0x7FFE	Overflow	D = 1 x E /Wh E = D * 1 Wh
	10000 Wh	10000	0x2710	Nominal range	
	1000 Wh	1000	0x03E8		
	1 Wh	1	0x0001		
Delivered active energy counter (E)	32766 Wh	32766	0x7FFE	Overflow	D = 1 x E /Wh E = D * 1 Wh
	10000 Wh	10000	0x2710	Nominal range	
	1000 Wh	1000	0x03E8		
	1 Wh	1	0x0001		
Reactive energy leading counter (E)	32766 varh	32766	0x7FFE	Overflow	D = 1 x E /varh E = D * 1 varh
	10000 varh	10000	0x2710	Nominal range	
	1000 varh	1000	0x03E8		
	1 varh	1	0x0001		
Reactive energy lagging counter (E)	32766 varh	32766	0x7FFE	Overflow	D = 1 x E /varh E = D * 1 varh
	10000 varh	10000	0x2710	Nominal range	
	1000 varh	1000	0x03E8		
	1 varh	1	0x0001		

Raw parameter data for acyclic services (not relevant with MODBUS application)

Raw parameter data

Byte	Bit	Description	Default
0	0	Current imbalance alarm limit	0x0
	1	Voltage alarm lower limit enable	
	2	Voltage alarm upper limit enable	
	3	Reserved	
	4	Current alarm lower limit enable	
	5	Current alarm upper limit enable	
	6	Frequency alarm lower limit enable	
	7	Frequency alarm upper limit enable	
1	0	Reserved	0x0
	1	Current range 1/5 A enabled	
	2	Reserved	
	3	Reserved	
	4	Reserved	
	5	Power factor alarm lower limit	
	6	Reserved	
	7	Diagnostic alarm enabled	
2	0 ...7	Harmonic select	0x1
3	0 ...7	Power factor lower limit High Byte	0x0
4	0 ...7	Power factor lower limit Low Byte	0x0
5	0 ...7	Current imbalance alarm limit High Byte	0x3F
6	0 ...7	Current imbalance alarm limit Low Byte	0xFF
7	0 ...7	Voltage alarm lower limit High Byte	0x00
8	0 ...7	Voltage alarm lower limit Low Byte	0x00
9	0 ...7	Voltage alarm upper limit High Byte	0x6c
10	0 ...7	Voltage alarm upper limit Low Byte	0x00
11	0 ...7	Current alarm lower limit High Byte	0x00
12	0 ...7	Current alarm lower limit Low Byte	0x00
13	0 ...7	Current alarm upper limit High Byte	0x6c
14	0 ...7	Current alarm upper limit Low Byte	0x00
15	0 ...7	Frequency alarm lower limit High Byte	0x16
16	0 ...7	Frequency alarm lower limit Low Byte	0x80
17	0 ...7	Frequency alarm upper limit High Byte	0x20
18	0 ...7	Frequency alarm upper limit Low Byte	0x80
19	0 ...7	Measured value Channel 0	0xFF
20	0 ...7	Measured value Channel 1	0xFF
21	0 ...7	Measured value Channel 2	0xFF
22	0 ...7	Measured value Channel 3	0xFF
23	0 ...7	Measured value Channel 4	0xFF
24	0 ...7	Measured value Channel 5	0xFF
25	0 ...7	Measured value Channel 6	0xFF
26	0 ...7	Measured value Channel 7	0xFF

Fieldbus specific notes for parameterising

PROFINET: The parameter block can be written on Index 125 of the module using a WriteRecord access (SFB53). A 4 byte header has to be prepended to the parameter data: 0x1F, 0x00, 0x04, 0x18.

PROFIBUS: The parameter block can be written on Index 125 of the module using a WriteRecord access (SFB53). No header is required.

EtherNet/IP and **DeviceNet**: The parameter block can be written on class 0x65, instance = slot number, attribute 0x73 using a writing access. No header is required. The parameter block can also be transferred as part of the configuration assembly.

Typical frequency curve for current and voltage measurements

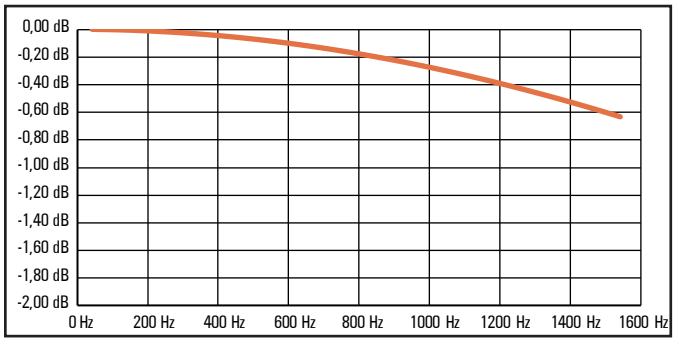

6.63 Power measurement module UR20-3EM-400V-AC-CT1A, UR20-3EM-400V-AC-CT5A

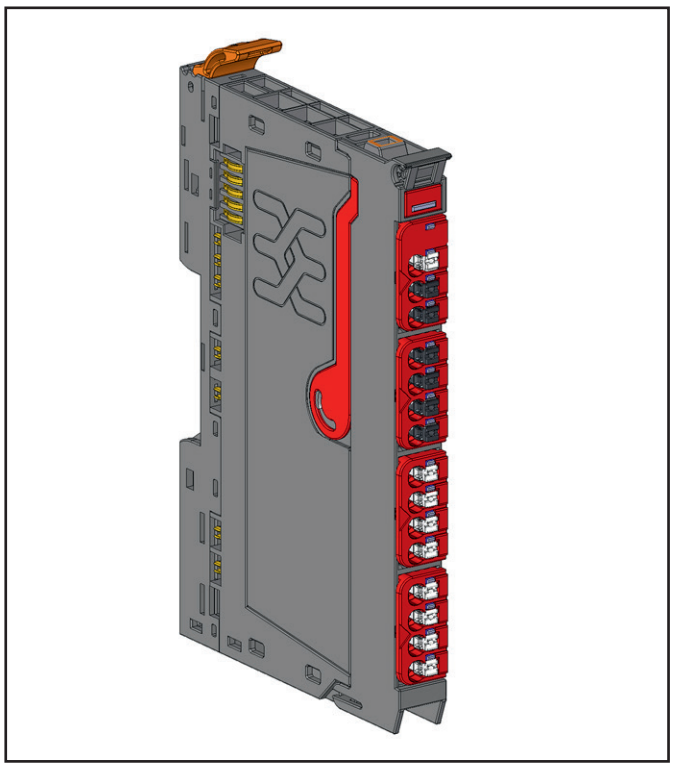

Power measurement module UR20-3EM-400V-AC-CT1A (Item No. 2920830000), UR20-3EM-400V-AC-CT5A (Item No. 2920840000)

The UR20-3EM-400V-AC-CTxA power measurement module can measure and process all relevant measurands of one or three phase and neutral current consumers (up to 520 V AC phase-to-phase voltage):

- Current (RMS/average/peak)
- Voltage (RMS/average/peak)
- Reactive, apparent and active power
- Power consumption
- Power factor
- Frequency
- Voltage upper and lower alarm
- Current upper and lower alarm

Current transformers are required for current measurements with up to 1 A current input for the CT1A module and 5 A for CT5A module. Scaling needs to be done externally by PLC or function blocks if other current conversion ratio are used than the default stated in technical data. Take note current input circuits can be damaged if voltages greater than 2 V with reference to neutral is applied.

The raw measured values are transferred via the connected fieldbus to a superior PLC or a control system.

The module delivers input process data to the fieldbus via six measurement data (16 bit each) and three energy counter data (32 bit each). The data are updated within one millisecond from the module to the coupler. The content of each measurement data and energy counter data can be chosen by first selecting the phase, then the parameter of interest.

Additionaly, several limits can be parameterised. Exceeding the voltage and current upper and lower limit will trigger the process alarms and the status word will be updated. Exceeding other limits will only cause the status word being updated. Latching of status word is possible via parameterisation. A status LED is assigned to each phase voltage and current.

Observe the following instructions when using the module:

- Interruption of the power supply for less than 1 ms has no impact. In the case of longer interruptions, the bus communication will be shut off.
- The current transformer wiring polarity must be observed in order to get correct power polarity and energy measurement.
- Single phase measurement is possible by connecting to phase 1 of the module. In case of split phase, 3 wire system, connect to phase 1 and 2 of the module.
- The module can be used to measure 3 phase power system with various earthing system such as TT, TN-C, TN-C-S, IT etc. Please note that the overvoltage category will be reduced from III to II if any of the nominal phase voltage to earth is greater than 300 V.

⚠ WARNING

Possible danger to life!

► Always disconnect the power supply to the station before working with the module and secure the station against being switched on again.

⚠ WARNING

Possible danger to life!

The touch-safe protection of this module is only provided with the DIN rail earthed properly.

► Make sure that the DIN rail is connected to PE by earth terminals before commissioning the module.

ATTENTION

The module can be destroyed by overload!

► The module is temporary overload-capable (max. 5 seconds up to the fivefold current). Make sure that there will be no higher current peaks (e.g. by saturating the transformer)!

► Alternatively, protect the current inputs by using appropriate fuses: 1.5 A (CT1A) or 6.3 A (CT5A).

ATTENTION

The module can be destroyed by a hot swap.

► Make sure that the input contacts are voltage-free before carrying out a hot swap of the electronic unit.

ATTENTION

Risk of material damage.

In the case of a maximum current measurement of 5 A for CT5A and a maximum temperature of > 55 °C, all contacts of the current measurement plug must be connected with 1.5 mm² wiring.



Name	Function
N	Neutral
L1	Line 1
L1	Line 1
L2	Line 2
L2	Line 2
L3	Line 3
L3	Line 3
I1_P	Line 1 current input positive
I1_N	Line 1 current input negative
I2_P	Line 2 current input positive
I2_N	Line 2 current input negative
I3_P	Line 3 current input positive
I3_N	Line 3 current input negative
IN_P	Neutral current input positive
IN_N	Neutral current input negative

Connections UR20-3EM-400V-AC-CTxA

Application with current transformer

⚠ WARNING

Hazardous voltage on open current path!

► Never use a transformer in no-load operation.

► Always connect the transformer with the power measurement module **before** you start to operate the transformer.

► Never unlock the connector frame of the module during opreration with a transformer.

Application examples

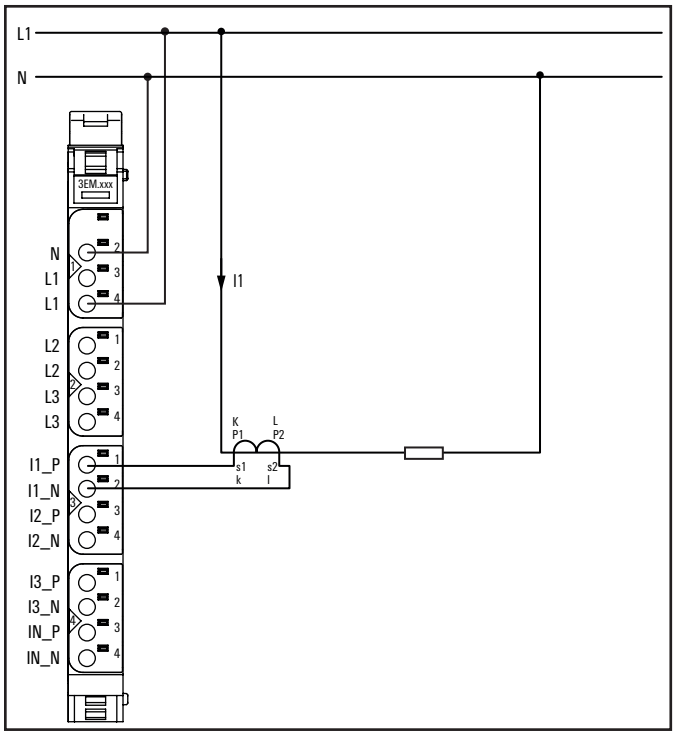

UR20-3EM-400V-AC-CTxA application: 1-phase connection

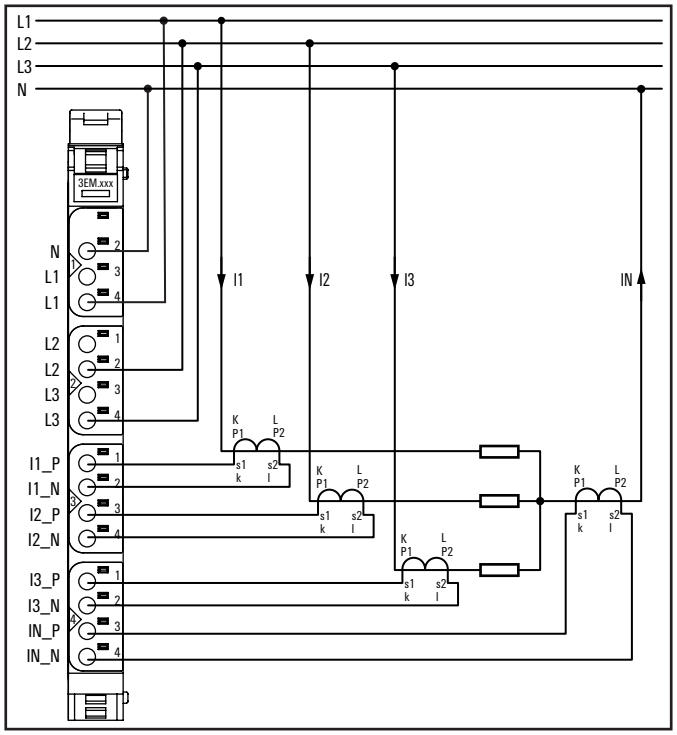

UR20-3EM-400V-AC-CTxA application: 3-phase 4-wire, 3 voltage inputs

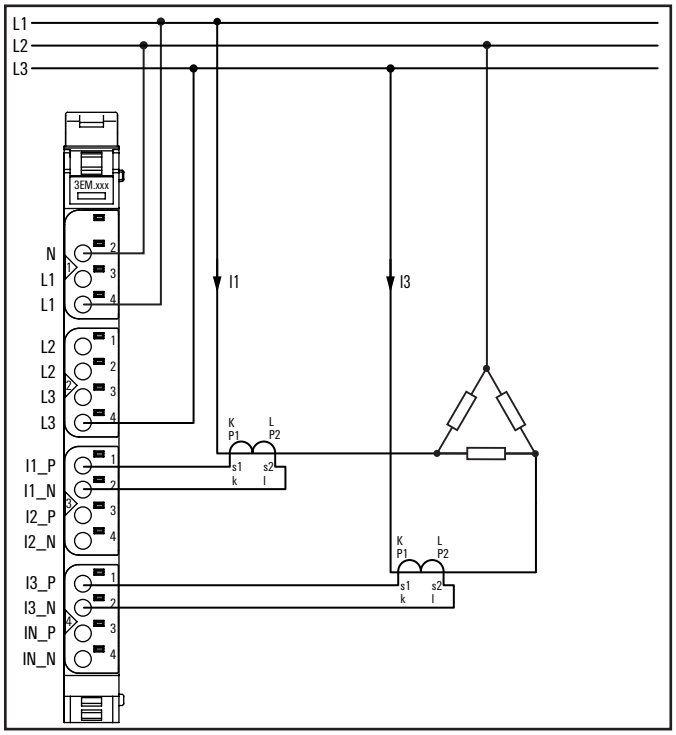

UR20-3EM-400V-AC-CTxA application: 3-phase 3-wire, delta connection

The meter topology (MT) MT0 can be used for a 3-phase 4-wire system where all 3 phase voltages and currents are measured. Measurement of neutral current is optional. If a neutral wire is not available in the application, the measurement is still possible as the module builds a virtual zero point with the 3 phase voltages. However, measurement errors increases with any unbalancing of the 3 phase systems.

The MT1 topology can be used for a 3-phase 3-wire system where only 2 line voltages and currents are measured (2 Wattmeter method). It can also be used for a 3-phase 4-wire system when there is no neutral current flowing. For this topology, L2 must be connected as neutral on the module. V_{L2} is computed as line voltage $V_{L1 - L3}$.

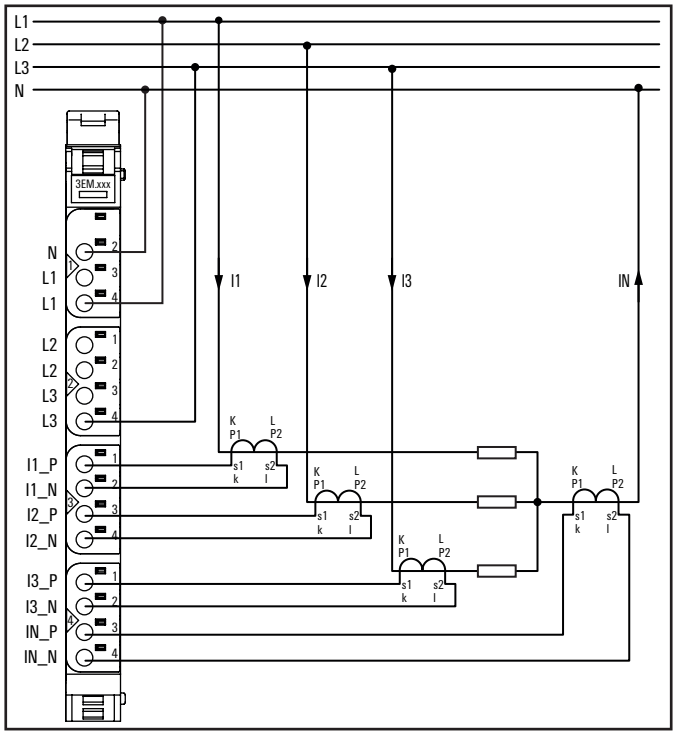

UR20-3EM-400V-AC-CTxA application: 3-phase-4-wire, 2 voltage inputs

The MT2 topology can be used for 3-phase 4-wire system where only 2 phase voltages and 3 currents are measured. Measurement of neutral current is optional. V_{L2} is computed as $-V_{L1}-V_{L3}$ based on balance system assumptions.

Measurement options depending on the meter topology (MT)

Measured value	MT0 [7]	MT1	MT2
RMS Voltage	x	x [1), 2)]	x [6)]
RMS Current	x	x [1)]	x
Peak Voltage	x	x [1), 2)]	x [6)]
Peak Current	x	x [1)]	x
Line Frequency	x	x [1), 2)]	x
Harmonic X RMS Voltage	x	x [1), 2)]	x [6)]
Harmonic Y RMS Voltage	x	x [1), 2)]	x [6)]
Harmonic Z RMS Voltage	x	x [1), 2)]	x [6)]
Harmonic X RMS Current	x	x [1)]	x
Harmonic Y RMS Current	x	x [1)]	x
Harmonic Z RMS Current	x	x [1)]	x
Power Factor	x	–	x
Total Harmonic Distortion Voltage	x	x [1), 2)]	x
Total Harmonic Distortion Current	x	x [1)]	x
RMS Voltage Average -3ph	x	–	x
RMS Current Average -3ph	x	–	x
RMS Current (Neutral)	x	–	x
Total Power Factor -3ph	x	x [3), 4)]	x
Active Power	x	–	x
Reactive Power	x [5)]	–	x [5)]
Apparent Power	x	–	x
Fundamental Active Power	x	–	x
Fundamental Reactive Power	x	–	x
Fundamental Apparent Power	x	–	x
Harmonic X Active Power	x	–	x
Harmonic Y Active Power	x	–	x
Harmonic Z Active Power	x	–	x
Harmonic X Reactive Power	x	–	x
Harmonic Y Reactive Power	x	–	x
Harmonic Z Reactive Power	x	–	x
Harmonic X Apparent Power	x	–	x
Harmonic Y Apparent Power	x	–	x
Harmonic Z Apparent Power	x	–	x
Active Power -3ph	x	x [3)]	x
Reactive Power -3ph	x [5)]	x [3), 4)]	x [5)]
Apparent Power -3ph	x	x [3), 4)]	x
Fundamental Active Power -3ph	x	x [3)]	x
Fundamental Reactive Power -3ph	x	x [3), 4)]	x
Fundamental Apparent Power -3ph	x	x [3), 4)]	x
Fundamental RMS Voltage	x	x [1), 2)]	x [6)]
Fundamental RMS Current	x	x [1)]	x

Measurement options depending on the meter topology (MT)

Energy Counter	MT0 [7]	MT1	MT2
Active Energy Received	x	–	x
Active Energy Delivered	x	–	x
Apparent Energy	x	–	x
Fundamental Reactive Leading Energy	x	–	x
Fundamental Reactive Lagging Energy	x	–	x
Fundamental Active Energy Received	x	–	x
Fundamental Active Energy Delivered	x	–	x
Active Energy Received -3ph	x [8)]	x [3)]	x [8)]
Active Energy Delivered -3ph	x [8)]	x [3)]	x [8)]
Fundamental Reactive Leading Energy -3ph	x [8)]	x [3), 4)]	x [8)]
Fundamental Reactive Lagging Energy -3ph	x [8)]	x [3), 4)]	x [8)]

x Measurement available
– Measurement will return invalid value

1) Line measurement instead of phase
2) When phase selected is L1, measurement is for L1-L2
   When phase selected is L2, measurement is for L1-L3
   When phase selected is L3, measurement is for L3-L2
3) Calculated using the 2-wattmeter method assuming that the sum of 3 line currents is 0
4) Valid only for 3-phase balanced system and load
5) Calculated using power triangle and valid only if harmonics is not present. If harmonics is present, you can read the fundamental reactive power instead for a more representative value
6) L2 voltage is calculated assuming that the sum of 3 phase voltages is 0
7) If a neutral wire is not available in the application, the measurement is still possible as the module builds a virtual zero point with the 3 phase voltages. However, measurement errors increases with any unbalancing of the 3-phase systems.
8) Take note that the total energy counter will oveflow much earlier than the individual phase energy counter as they are represented by the same number of bits

MT0: 3-phase 4-wire, 3 voltage inputs
MT1: 3-phase 3-wire, delta
MT2: 3-phase 4-wire, 2 voltage inputs

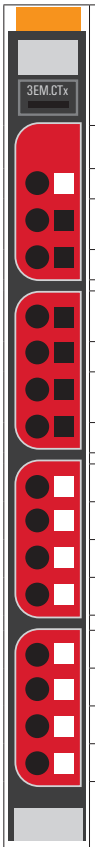

	Module status LED Green: Communication over the system bus Red: Error
1.2	
1.3	Yellow: Voltage >33 V_{rms} at L1 Yellow flashing: Running light with 2.1 and 2.3 indicates phase sequence
1.4	Red: Overvoltage limit exceeded at L1
2.1	Yellow: Voltage >33 V_{rms} at L2 Yellow flashing: Running light with 1.3 and 2.3 indicates phase sequence
2.2	Red: Overvoltage limit exceeded at L2
2.3	Yellow: Voltage >33 V_{rms} at L3 Yellow flashing: Running light with 1.3 and 2.1 indicates phase sequence
2.4	Red: Overvoltage limit exceeded at L3
3.1	Red: Overcurrent limit exceeded at L1
3.2	
3.3	Red: Overcurrent limit exceeded at L2
3.4	
4.1	Red: Overcurrent limit exceeded at L3
4.2	
4.3	Red: Overcurrent limit exceeded at N
4.4	
	Overvoltage or overcurrent limit is defined as 10 % of the nominal input voltage or current. Nominal input current 1 A (CT1A) or 5 A (CT5A) Nominal input voltage 300 V_{eff} AC (Star) or 520 V_{eff} AC (Delta)

The yellow LEDs for 1.3, 2.1 and 2.3 are not displayed correctly in the Webserver.

LED indicators UR20-3EM-400V-AC-CTxA, troubleshooting see Chapter 12

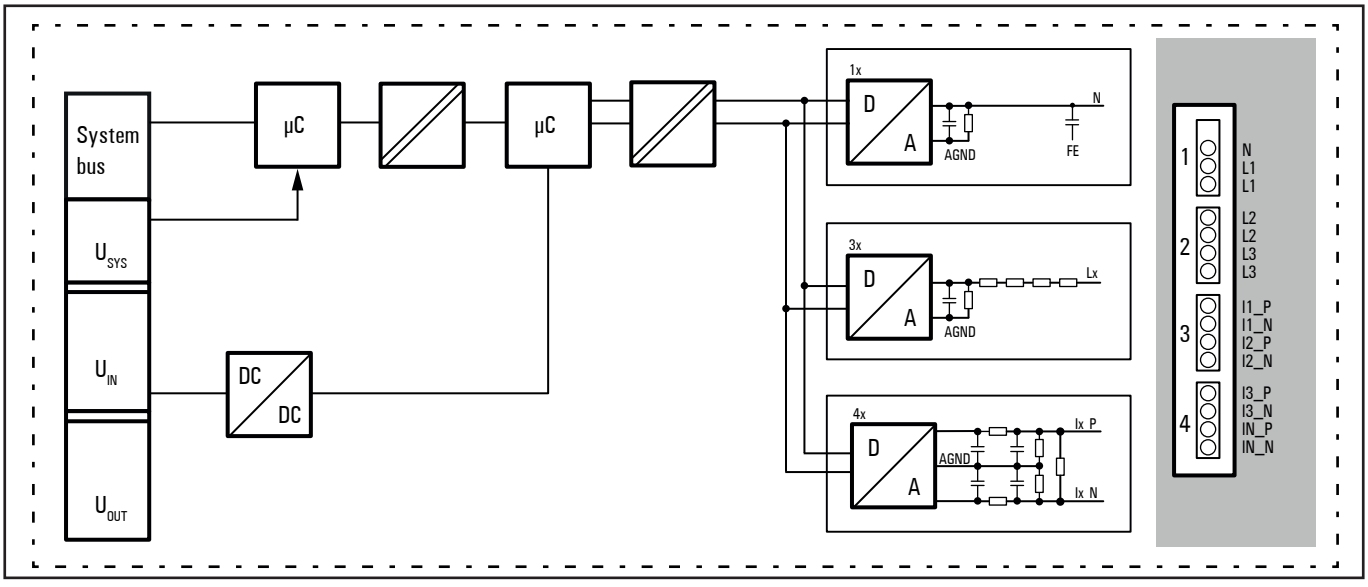

Block diagram UR20-3EM-400V-AC-CTxA

Technical data UR20-3EM-400V-AC-CT1A (Item No. 2920830000) and UR20-3EM-400V-AC-CT5A (Item No. 2920840000)

System data	
Data	Process, parameter and diagnostic data depend on the coupler used, see coupler description
Interface	u-remote system bus
System bus transfer rate	48 Mbps / 192 Mbps
Connections	
Number	3 Phases, 1 Neutral, 4 pairs of current transformer conductors
Harmonics analysis	up to 43rd
Measuring methods	Converter/ Current transformer / Voltage transformer
Overvoltage category	III (acc. to IEC 61010-1) II (acc. to IEC 61010-1) for systems with nominal voltage to earth > 300 V
Frequency of the supply system	45 ... 65 Hz
Input impedance voltage	4.0022 MΩ
Isolation	Reinforced isolation to system and power rail and basic isolation to functional earth
Measuring accuracy	0.25 % in relation to final value (U / I), 0.5 % for the calculated values (the final value refers to the converted value when process data returns 27648 in decimal) 0.75 % for Harmonics
Temperature coefficient	U / I and calculated values 75 ppm/K
Input impedance current (differential)	40 mΩ (CT1A) 5 mΩ (CT5A)
Input current cable	shielded (grounded at both ends)
Rated voltage	300 V_{eff} AC (L–N), 520 V_{eff} AC (L–L) according to table I.1 of IEC 61010-1:2010/AMD1:2016/COR1:2019
Rated input current	1 A_{eff} (CT1A) 5 A_{eff} (CT5A)
Resolution (per measurement)	16 Bit (internally 24 Bit) 32 Bit for energy counter
Sampling rate of voltage and current measurement	Sigma Delta ADC with 1.024 MHz (bandwidth of interest from 40 Hz to 3.3 kHz)
Data storage	Energy counters saved at 15min interval
Module diagnosis	yes
Individual channel diagnosis	yes
Supply	
Supply voltage	24 V DC +20%/-15%, according to IEC 61131-2 24 V DC +30%/-25%, according to DNV
Current consumption from system current path I_{SYS}	8 mA
Current consumption from input current path I_{IN}	< 35 mA
General data	
Weight (operational status)	88 g
ATEX/UKEX conform	no
For additional general data, see Section 3.4	

Overview of the editable parameters UR20-3EM-400V-AC-CTxA (Order according to web server)

Name	Options[1)]	Description / data width	Default
Meter topology	3P4W, 3 voltage inputs (0) / 3P3W delta (1) / 3P4W, 2 voltage inputs (2)	2 Bit	3P4W, 3 voltage inputs
Line frequency	50 Hz (0) / 60 Hz (1)	1 Bit	50 Hz
Harmonic X	1 ... 43	1 = fundamental	3
Harmonic Y	1 ... 43	1 = fundamental	5
Harmonic Z	1 ... 43	1 = fundamental	7
Voltage low alarm	disabled (0) / enabled (1)	1 Bit	disabled
Voltage low limit	0 ... 520 V (0 ... 27648)	Positive values only (16 Bit)	0
Voltage high alarm	disabled (0) / enabled (1)	1 Bit	disabled
Voltage high limit	0 ... 520 V (0 ... 27648)	Positive values only (16 Bit)	27648
Voltage sag alarm	disabled (0) / enabled (1)	1 Bit	disabled
Voltage sag limit	0 ... 520 V (0 ... 27648)		0
Current low alarm	disabled (0) / enabled (1)	1 Bit	disabled
Current low limit	CT1A: 0 ... 1 A (0 ... 27648) CT5A: 0 ... 5 A (0 ... 27648)	Positive values only (16 Bit)	0
Current high alarm	disabled (0) / enabled (1)	1 Bit	disabled
Current high limit	CT1A: 0 ... 1 A (0 ... 27648) CT5A: 0 ... 5 A (0 ... 27648)	Positive values only (16 Bit)	27648
Current imbalance alarm	disabled (0) / enabled (1)	1 Bit	disabled
Current imbalance limit	0 ... 100% (0 ... 16383)	Positive values only (16 Bit)	16383
Neutral current mismatch alarm	disabled (0) / enabled (1)	1 Bit	disabled
Neutral current mismatch limit	CT1A: 0 ... 1 A (0 ... 27648) CT5A: 0 ... 5 A (0 ... 27648)		27648
Frequency low alarm	disabled (0) / enabled (1)	1 Bit	disabled
Frequency low limit	45 ... 65 Hz (5760 ... 8320)	Positive values only (16 Bit)	5760
Frequency high alarm	disabled (0) / enabled (1)	1 Bit	disabled
Frequency high limit	45 ... 65 Hz (5760 ... 8320)	Positive values only (16 Bit)	8320
Power factor alarm	disabled (0) / enabled (1)	1 Bit	disabled
Power factor low limit	0 ... 1 (0 ... 16383)	Positive values only (16 Bit)	0
Status word latch	disabled (0) / enabled (1)	1 Bit	disabled
Diagnostic alarm	disabled (0) / enabled (1)	1 Bit	disabled
Phase shifting L1	−6.732° ... 1.107° (50 Hz) (-383 ... 63) −8.079° ... 1.329° (60 Hz) (-383 ... 63)	16 Bit Enter phase shift here to correct the phase error introduced by CT. Negative values indicate current lead voltage, and vice versa.	0
Phase shifting L2		see Phase shifting L1	
Phase shifting L3		see Phase shifting L1	
Phase 0	L1 (0) / L2 (1) / L3 (2)		L1
Measured value 0	disabled (0)		disabled
	RMS voltage (1)		
	RMS current (2)		
	Peak voltage (3)		

1) Values in brackets for Modbus-TCP (firmware version 02.00.00 and higher), CANopen, EtherCAT and EtherNet/IP via module parameter class

Overview of the editable parameters UR20-3EM-400V-AC-CTxA (Order according to web server)

Name	Options[1)]	Description / data width	Default
	Peak current (4)		
	Line frequency (5)		
	Harmonic X RMS voltage (6)		
	Harmonic Y RMS voltage (7)		
	Harmonic Z RMS voltage (8)		
	Harmonic X RMS current (9)		
	Harmonic Y RMS current (10)		
	Harmonic Z RMS current (11)		
	Power factor (12)	Absolute value only	
	THD voltage (13)		
	THD current (14)		
	RMS voltage average -3ph (15)		
	RMS current average -3ph (16)		
	RMS current neutral (17)		
	Total power factor -3ph (18)	Total Active Power/ Total Apparent Power (Absolute value only)	
	Active power (19)		
	Reactive power (20)	This is only accurate if no harmonics is present. With harmonics present, you can read fundamental reactive power instead for a more representative value. If the line frequency is parametrised differently than the system to be measured, the reactive power cannot be calculated correctly and incorrect values will be displayed.	
	Apparent power (21)		
	Fundamental active power (22)		
	Fundamental reactive power (23)		
	Fundamental apparent power (24)		
	Harmonic X active power (25)		
	Harmonic Y active power (26)		
	Harmonic Z active power (27)		
	Harmonic X reactive power (28)		
	Harmonic Y reactive power (29)		
	Harmonic Z reactive power (30)		
	Harmonic X apparent power (31)		
	Harmonic Y apparent power (32)		
	Harmonic Z apparent power (33)		
	Active power -3ph (34)		
	Reactive power -3ph (35)		
	Apparent power -3ph (36)		
	Fundamental active power -3ph (37)		
	Fundamental reactive power -3ph (38)		
	Fundamental apparent power -3ph (39)		

1) Values in brackets for Modbus-TCP (firmware version 02.00.00 and higher), CANopen, EtherCAT and EtherNet/IP via module parameter class

Overview of the editable parameters UR20-3EM-400V-AC-CTxA (Order according to web server)

Name	Options[1)]	Description / data width	Default
	Fundamental RMS voltage (40)		
	Fundamental RMS current (41)		
Phase 1		see Phase 0	
Measured value 1		see Measured value 0	
Phase 2		see Phase 0	
Measured value 2		see Measured value 0	
Phase 3		see Phase 0	
Measured value 3		see Measured value 0	
Phase 4		see Phase 0	
Measured value 4		see Measured value 0	
Phase 5		see Phase 0	
Measured value 5		see Measured value 0	
Phase 6	L1 (0) / L2 (1) / L3 (2)		L1
Energy counter 0	disabled (0)		disabled
	Active energy received (1)		
	Active energy delivered (2)		
	Apparent energy (3)		
	Fundamental reactive leading energy (4)		
	Fundamental reactive lagging energy (5)		
	Fundamental active energy received (6)		
	Fundamental active energy delivered (7)		
	Active energy received -3ph (8)		
	Active energy delivered -3ph (9)		
	Fundamental reactive leading. energy -3ph (10)		
	Fundamental reactive lagging energy -3ph (11)		
Phase 7		see Phase 6	
Energy counter 1		see Energy counter 0	
Phase 8		see Phase 6	
Energy counter 2		see Energy counter 0	

1) Values in brackets for Modbus-TCP (firmware version 02.00.00 and higher), CANopen, EtherCAT and EtherNet/IP via module parameter class

Please see more details for conversion in the table “Measuring ranges” on page 653.

Calculation of reactive power

$$Q = \sqrt{S^2 - P^2}$$

Calculation of current imbalance

$$\text{Current imbalance} = \frac{\max(|I_{RMS}L1 - I_{RMS}Average|\ ,\ |I_{RMS}L2 - I_{RMS}Average|\ ,\ |I_{RMS}L3 - I_{RMS}Average|)}{I_{RMS}Average}$$

Diagnostic data UR20-3EM-400V-AC-CTxA

Name	Byte	Bit	Description	Default
Error indicator	0	0	Module error	0
		1	Internal error	0
		2	External error	0
		3	Channel error	0
		4	Error	0
		5	Power supply fault	0
		6	Reserved	0
		7	Parameter error	0
Module type	1	0	Module Type	0x05
		1		
		2		
		3		
		4	Channel information available	1
		5	Reserved	0
		6	Reserved	0
		7	Reserved	0
Error byte 2	2	0 ... 7	Reserved	0
Error byte 3	3	0 ... 2	Reserved	0
		3	Internal diagnostic FIFO full	0
		4	Communication fault	0
		5	Reserved	0
		6	Process alarm lost	0
		7	Reserved	0
Channel type	4	0	Channel type	0x64
		1		
		2		
		3		
		4		
		5		
		6		
		7	Reserved	0
Diagnostic bits per channel	5		Number of diagnostic bit per channel	16
Number of channels	6			1
Channel error	7	0	Error at channel 0	0
		1 ... 7	Reserved	0
	8 ... 10	0 ... 7	Reserved	0

Diagnostic data UR20-3EM-400V-AC-CTxA

Name	Byte	Bit	Description	Default
Channel 0 error	11	0	Voltage upper limit exceeded L1	0
		1	Voltage upper limit exceeded L2	0
		2	Voltage upper limit exceeded L3	0
		3	Current upper limit exceeded L1	0
		4	Current upper limit exceeded L2	0
		5	Reserved	0
		6	Current upper limit exceeded L3	0
		7	Current upper limit exceeded N	0
	12	0 ... 7	Reserved	0
Channel 1 error ... Channel 15 error	13 ... 42	0 ... 7	Reserved	0
Time stamp	43-46		time stamp [µs] (32bit)	

Process data inputs UR20-3EM-400V-AC-CTxA

Channel	Byte	Format	Description
0	IB0	int16	Measured value 0
	IB1		
	IB2	int16	Measured value 1
	IB3		
	IB4	int16	Measured value 2
	IB5		
	IB6	int16	Measured value 3
	IB7		
	IB8	int16	Measured value 4
	IB9		
	IB10	int16	Measured value 5
	IB11		
	IB12	uint32	Energy counter 0
	IB13		
	IB14		
	IB15		
	IB16	uint32	Energy counter 1
	IB17		
	IB18		
	IB19		
	IB20	uint32	Energy counter 2
	IB21		
	IB22		
	IB23		
	IB24	Word	Status word
	IB25		
	IB26	uint32	Mail box data
	IB27		
	IB28		
	IB29		
	IB30	Byte	Status word address
	IB31	Byte	Mail box address

Process data outputs UR20-3EM-400V-AC-CTxA

Channel	Byte	Bit	Format	Description	Value
0	QB0	QX0.0	Bit	Reset all energy counters	0..1
		QX0.1	Bit	Reserved	
		QX0.2	Bit	Reserved	
		QX0.3	Bit	Clear status latch	0..1
		QX0.4	Bit	Reserved	
		QX0.5	Bit	Reserved	
		QX0.6	Bit	Reserved	
		QX0.7	Bit	Save energy counter[1)]	0..1
	QB1		Byte	Key to counter reset	0xAF
	QB2		Byte	Status word address	0..3
	QB3		Byte	Mailbox address	0..128
	QB4 ... QB7			Reserved	

1) This bit is only applicable for rising edges to avoid overwriting of the EEPROM. Excessive saving of the energy counter could reduce the service life of the memory.

Process alarm UR20-3EM-400V-AC-CTxA

Name	Byte	Bit	Function
Alarm	0	0	Reserved
		1	Voltage upper limit exceeded at L1
		2	Voltage upper limit exceeded at L2
		3	Voltage upper limit exceeded at L3
		4	Current upper limit exceeded at L1
		5	Current upper limit exceeded at L2
		6	Current upper limit exceeded at L3
		7	Reserved
Alarm	1	0	Reserved
		1	Voltage lower limit underrun at L1
		2	Voltage lower limit underrun at L2
		3	Voltage lower limit underrun at L3
		4	Current lower limit underrun at L1
		5	Current lower limit underrun at L2
		6	Current lower limit underrun at L3
		7	Reserved
Time stamp	2 ... 3		The two lowest bytes of the internal 32-bit timer

Mailbox

The process data inputs are limited and not sufficient to map the huge amount of data available. Therefore, a mailbox system is implemented. Using a mailbox address enables to read back data that are not pre-mapped to the process data inputs.

► In the process data output byte, set the mailbox address for the data of interest.

Mailbox data returned will be in uint32 data format and conversion needs to be done based on the mailbox address and conversion formula provided in this manual.

Mailbox address

Address	Mailbox data
0	Disabled
1	RMS voltage L1
2	RMS voltage L2
3	RMS voltage L3
4	RMS current L1
5	RMS current L2
6	RMS current L3
7	Peak voltage L1
8	Peak voltage L2
9	Peak voltage L3
10	Peak current L1
11	Peak current L2
12	Peak current L3
13	Line frequency L1
14	Line frequency L2
15	Line frequency L3
16	Harmonic X RMS voltage L1
17	Harmonic X RMS voltage L2
18	Harmonic X RMS voltage L3
19	Harmonic Y RMS voltage L1
20	Harmonic Y RMS voltage L2
21	Harmonic Y RMS voltage L3
22	Harmonic Z RMS voltage L1
23	Harmonic Z RMS voltage L2
24	Harmonic Z RMS voltage L3
25	Harmonic X RMS current L1
26	Harmonic X RMS current L2
27	Harmonic X RMS current L3
28	Harmonic Y RMS current L1
29	Harmonic Y RMS current L2
30	Harmonic Y RMS current L3
31	Harmonic Z RMS current L1
32	Harmonic Z RMS current L2
33	Harmonic Z RMS current L3
34	Power factor L1
35	Power factor L2
36	Power factor L3
37	THD voltage L1
38	THD voltage L2

Mailbox address

Address	Mailbox data
39	THD voltage L3
40	THD current L1
41	THD current L2
42	THD current L3
43	RMS voltage average -3ph
44	RMS current average -3ph
45	RMS current neutral
46	Total power factor -3ph
47	Active power L1
48	Active power L2
49	Active power L3
50	Reactive power L1
51	Reactive power L2
52	Reactive power L3
53	Apparent power L1
54	Apparent power L2
55	Apparent power L3
56	Fundamental active power L1
57	Fundamental active power L2
58	Fundamental active power L3
59	Fundamental reactive power L1
60	Fundamental reactive power L2
61	Fundamental reactive power L3
62	Fundamental apparent power L1
63	Fundamental apparent power L2
64	Fundamental apparent power L3
65	Harmonic X active power L1
66	Harmonic X active power L2
67	Harmonic X active power L3
68	Harmonic Y active power L1
69	Harmonic Y active power L2
70	Harmonic Y active power L3
71	Harmonic Z active power L1
72	Harmonic Z active power L2
73	Harmonic Z active power L3
74	Harmonic X reactive power L1
75	Harmonic X reactive power L2
76	Harmonic X reactive power L3
77	Harmonic Y reactive power L1
78	Harmonic Y reactive power L2
79	Harmonic Y reactive power L3
80	Harmonic Z reactive power L1
81	Harmonic Z reactive power L2
82	Harmonic Z reactive power L3
83	Harmonic X apparent power L1
84	Harmonic X apparent power L2
85	Harmonic X apparent power L3
86	Harmonic Y apparent power L1
87	Harmonic Y apparent power L2
88	Harmonic Y apparent power L3
89	Harmonic Z apparent power L1

Mailbox address

Address	Mailbox data
90	Harmonic Z apparent power L2
91	Harmonic Z apparent power L3
92	Active power -3ph
93	Reactive power -3ph
94	Apparent power -3ph
95	Fundamental active power -3ph
96	Fundamental reactive power -3ph
97	Fundamental apparent power -3ph
98	Active energy received L1
99	Active energy received L2
100	Active energy received L3
101	Active energy delivered L1
102	Active energy delivered L2
103	Active energy delivered L3
104	Apparent energy L1
105	Apparent energy L2
106	Apparent energy L3
107	Fundamental reactive leading energy L1
108	Fundamental reactive leading energy L2
109	Fundamental reactive leading energy L3
110	Fundamental reactive lagging energy L1
111	Fundamental reactive lagging energy L2
112	Fundamental reactive lagging energy L3
113	Fundamental active energy received L1
114	Fundamental active energy received L2
115	Fundamental active energy received L3
116	Fundamental active energy delivered L1
117	Fundamental active energy delivered L2
118	Fundamental active energy delivered L3
119	Active energy received -3ph
120	Active energy delivered -3ph
121	Fundamental reactive leading energy -3ph
122	Fundamental reactive lagging energy -3ph
123	Fundamental RMS voltage L1
124	Fundamental RMS voltage L2
125	Fundamental RMS voltage L3
126	Fundamental RMS current L1
127	Fundamental RMS current L2
128	Fundamental RMS current L3

Status word 0

Byte	Bit	Function
0	0	Phase sequence L1-L2-L3 detected
	1	Phase sequence L1-L3-L2 detected
	2	Voltage detected at L1
	3	Voltage detected at L2
	4	Voltage detected at L3
	5	Reserved
	6	Reserved
	7	Reserved
1	0	Status Error at L1
	1	Status Error at L2
	2	Status Error at L3
	3	Current imbalance detected
	4	Neutral current mismatch detected
	5	Reserved
	6	Reserved
	7	Reserved

Status word 1 for L1, 2 for L2, 3 for L3

Byte	Bit	Function
0	0	Voltage lower limit underrun
	1	Voltage upper limit exceeded
	2	Voltage sag
	3	Current lower limit underrun
	4	Current upper limit exceeded
	5	Reserved
	6	Reserved
	7	Reserved
1	0	Frequency lower limit underrun
	1	Frequency upper limit exceeded
	2	Power factor lower limit underrun
	3	Reserved
	4	Reserved
	5	Reserved
	6	Reserved
	7	Reserved

A status error will be updated based on actual event happening, no latching default.
To enable status latching, use the **Status word latch** parameter, if needed.
To clear the latched status, use the **Clear Status Latch** bit in the output process mapping. In the process data output byte, set the status word address 0, 1, 2 or 3 to read back the respective status word.

Measuring ranges and conversions UR20-3EM-400V-AC-CTxA, scaling factor see following section

Measuring range	Value	Decimal (D)	Hexadecimal	Range	Conversion
RMS voltage (U) RMS voltage average -3ph (U) Harmonic RMS voltage (U) Voltage lower/upper limit (U)	611.463 V_{RMS}	32511	0x7EFF	Overloading	
	520 V_{RMS}	27648	0x6C00	Nominal range	D = 27648 x U / 520 V_{RMS} U = D x 520 V_{RMS} / 27648
	260 V_{RMS}	13824	0x3600		
	0 V_{RMS}	0	0x0000		
Peak voltage (U) Voltage sag limit (U)	864.279 V	32511	0x7EFF	Overloading	
	735 V	27648	0x6C00	Nominal range	D = 27648 x U / 735 V U = D x 735 V / 27648
	367.5 V	13824	0x3600		
	0 V	0	0x0000		
[CT1A] RMS current (I) RMS current average -3ph (I) Harmonic RMS current (I) Current lower/upper limit (I)	1.176 A_{RMS}	32511	0x7EFF	Overloading	
	1 A_{RMS}	27648	0x6C00	Nominal range	D = 27648 x I / 1 A_{RMS} I = D x 1 A_{RMS} / 27648
	0.5 A_{RMS}	13824	0x3600		
	0 A_{RMS}	0	0x0000		
[CT5A] RMS current (I) RMS current average -3ph (I) Harmonic RMS current (I) Current lower/upper limit (I)	5.879 A_{RMS}	32511	0x7EFF	Overloading	
	5 A_{RMS}	27648	0x6C00	Nominal range	D = 27648 x I / 5 A_{RMS} I = D x 5 A_{RMS} / 27648
	2.5 A_{RMS}	13824	0x3600		
	0 A_{RMS}	0	0x0000		
[CT1A] Peak current (I)	3.528 A	32511	0x7EFF	Overloading	
	3.0 A	27648	0x6C00	Nominal range	D = 27648 x I / 3 A I = D x 3 A/ 27648
	1.5 A	13824	0x3600		
	0 A	0	0x0000		
[CT5A] Peak current (I)	17.638 A	32511	0x7EFF	Overloading	
	15 A	27648	0x6C00	Nominal range	D = 27648 x I / 15 A I = D x 15 A/ 27648
	7.5 A	13824	0x3600		
	0 A	0	0x0000		
[CT1A] Neutral current mismatch limit (I)	1 A	27648	0x6C00	Nominal range	D = 27648 x I / 1 A I = D x 1 A/ 27648
	0.5 A	13824	0x3600		
	0 A	0	0x0000		
[CT5A] Neutral current mismatch limit (I)	5 A	27648	0x6C00	Nominal range	D = 27648 x I / 5 A I = D x 5 A/ 27648
	2.5 A	13824	0x3600		
	0 A	0	0x0000		
Line frequency (f) Frequency lower limit (f) Frequency upper limit (f)	65 Hz	8320	0x2080	Nominal range	D = 128 x f [Hz] f = D / 128
	60 Hz	7680	0x1E00		
	50 Hz	6400	0x1900		
	45 Hz	5760	0x1680		

Measuring ranges and conversions UR20-3EM-400V-AC-CTxA, scaling factor see following section

Measuring range	Value	Decimal (D)	Hexadecimal	Range	Conversion
Current imbalance limit (CI) Total Harmonic Distortion (THD)	100.00 %	16383	0x3FFF	Nominal range	D = 16383 x CI / 100 CI = D x 100 / 16383 D = 16383 x THD / 100 THD = D x 100 / 16383
	75.00 %	12287	0x2FFF		
	50.00 %	8191	0x1FFF		
	0.00 %	0	0x0000		
Power factor (PF) Total power factor -3ph (PF)	1	16383	0x3FFF	Nominal range	D = 16383 x PF PF = D / 16383
	0.750	12287	0x2FFF		
	0.500	8191	0x1FFF		
	0.000	0	0x0000		
[CT5A] Active power (P) Fundamental active power (P) Harmonic active power (P)	3057.313 W	32511	0x7EFF	Overloading	
	2600 W	27648	0x6C00	Nominal range	D = 27648 x P / 2600 W P = D x 2600 W / 27648
	1300 W	13824	0x3600		
	0 W	0	0x0000		
	-1300 W	-13824	0xCA00		
	-2600 W	-27648	0x9400		
	-3057.313 W	-32511	0x8101	Underloading	
[CT1A] Active power (P) Fundamental active power (P) Harmonic active power (P)	611.463 W	32511	0x7EFF	Overloading	
	520 W	27648	0x6C00	Nominal range	D = 27648 x P / 520 W P = D x 520 W / 27648
	260 W	13824	0x3600		
	0 W	0	0x0000		
	-260 W	-13824	0xCA00		
	-520 W	-27648	0x9400		
	-611.463 W	-32511	0x8101	Underloading	
[CT5A] Active power -3ph (P) Fundamental active power -3ph (P)	9171.940 W	32511	0x7EFF	Overloading	
	7800 W	27648	0x6C00	Nominal range	D = 27648 x P / 7800 W P = D x 7800 W / 27648
	3900 W	13824	0x3600		
	0 W	0	0x0000		
	-3900 W	-13824	0xCA00		
	-7800 W	-27648	0x9400		
	-9171.940 W	-32511	0x8101	Underloading	

Measuring ranges and conversions UR20-3EM-400V-AC-CTxA, scaling factor see following section

Measuring range	Value	Decimal (D)	Hexadecimal	Range	Conversion
[CT1A] Active power -3ph (P) Fundamental active power -3ph (P)	1834.388 W	32511	0x7EFF	Overloading	
	1560 W	27648	0x6C00	Nominal range	D = 27648 x P / 1560 W P = D x 1560 W / 27648
	780 W	13824	0x3600		
	0 W	0	0x0000		
	-780 W	-13824	0xCA00		
	-1560 W	-27648	0x9400		
	-1834.388 W	-32511	0x8101	Underloading	
[CT5A] Reactive power (Q) Fundamental reactive power (Q) Harmonic reactive power (Q)	3057.313 var	32511	0x7EFF	Overloading	
	2600 var	27648	0x6C00	Nominal range	D = 27648 x Q / 2600 var Q = D x 2600 var / 27648
	1300 var	13824	0x3600		
	0 var	0	0x0000		
	-1300 var	-13824	0xCA00		
	-2600 var	-27648	0x9400		
	-3057.313 var	-32511	0x8101	Underloading	
[CT1A] Reactive power (Q) Fundamental reactive power (Q) Harmonic reactive power (Q)	611.463 var	32511	0x7EFF	Overloading	
	520 var	27648	0x6C00	Nominal range	D = 27648 x Q / 520 var Q = D x 520 var / 27648
	260 var	13824	0x3600		
	0 var	0	0x0000		
	-260 var	-13824	0xCA00		
	-520 var	-27648	0x9400		
	-611.463 var	-32511	0x8101	Underloading	
[CT5A] Reactive power -3ph (Q) Fundamental reactive power -3ph (Q)	9171.940 var	32511	0x7EFF	Overloading	
	7800 var	27648	0x6C00	Nominal range	D = 27648 x Q / 7800 var Q = D x 7800 var / 27648
	3900 var	13824	0x3600		
	0 var	0	0x0000		
	-3900 var	-13824	0xCA00		
	-7800 var	-27648	0x9400		
	-9171.940 var	-32511	0x8101	Underloading	
[CT1A] Reactive power -3ph (Q) Fundamental reactive power -3ph (Q)	1834.388 var	32511	0x7EFF	Overloading	
	1560 var	27648	0x6C00	Nominal range	D = 27648 x Q / 1560 var Q = D x 1560 var / 27648
	780 var	13824	0x3600		
	0 var	0	0x0000		
	-780 var	-13824	0xCA00		
	-1560 var	-27648	0x9400		
	-1834.388 var	-32511	0x8101	Underloading	

Measuring ranges and conversions UR20-3EM-400V-AC-CTxA, scaling factor see following section

Measuring range	Value	Decimal (D)	Hexadecimal	Range	Conversion
[CT5A] Apparent power (S) Fundamental apparent power (S) Harmonic apparent power (S)	3057.313 VA	32511	0x7EFF	Overloading	
	2600 VA	27648	0x6C00	Nominal range	D = 27648 x S / 2600 VA S = D x 2600 VA / 27648
	1300 VA	13824	0x3600		
	0 VA	0	0x0000		
[CT1A] Apparent power (S) Fundamental apparent power (S) Harmonic apparent power (S)	611.463 VA	32511	0x7EFF	Overloading	
	520 VA	27648	0x6C00	Nominal range	D = 27648 x S / 520 VA S = D x 520 VA / 27648
	260 VA	13824	0x3600		
	0 VA	0	0x0000		
[CT5A] Apparent power -3ph (S) Fundamental apparent power -3ph (S)	9171.940 VA	32511	0x7EFF	Overloading	
	7800 VA	27648	0x6C00	Nominal range	D = 27648 x S / 7800 VA S = D x 7800 VA / 27648
	3900 VA	13824	0x3600		
	0 VA	0	0x0000		
[CT1A] Apparent power -3ph (S) Fundamental apparent power -3ph (S)	1834.388 VA	32511	0x7EFF	Overloading	
	1560 VA	27648	0x6C00	Nominal range	D = 27648 x S / 1560 VA S = D x 1560 VA / 27648
	780 VA	13824	0x3600		
	0 VA	0	0x0000		
Actve energy (E) Fundamental active energy (E) Active energy -3ph (E)	429490176.000 Wh	4294901760	0xFFFF0000	Nominal range	D = 10 x E Wh E = D / 10 Wh
	214748364.700 Wh	2147483647	0x7FFFFFFF		
	0.000 Wh	0	0x00000000		
Fundamental reactive leading energy (E) Fundamental reactive lagging energy (E) Fundamental reactive leading energy -3ph (E) Fundamental reactive lagging energy -3ph (E)	429490176.000 Varh	4294901760	0xFFFF0000	Nominal range	D = 10 x E Varh E = D / 10 Varh
	214748364.700 Varh	2147483647	0x7FFFFFFF		
	0.000 Varh	0	0x00000000		
Apparent energy (E)	429490176.000 VAh	4294901760	0xFFFF0000	Nominal range	D = 10 x E VAh E = D / 10 VAh
	214748364.700 VAh	2147483647	0x7FFFFFFF		
	0.000 VAh	0	0x00000000		

Scaling factor and calculation

► To get actual current, power and energy values, multiply the module measured values externally in the PLC application or function block by the scaling factor.

Device	Scaling factor
-CT1A, -CT5A	CTR CTR = I Primary/ I Secondary of actual current transformer used

Example

Module measured rms current	1 A	5 A
Module measured apparent power	300 VA	1500 VA
Module measured active energy	7200 Wh	7200 Wh
Current transformer	1000 A:1 A	5000 A:5 A
Scaling factor (S.F.)	1000 A/1 A = 1000	5000 A/5 A = 1000

Calculations

Actual rms current =	1 A x S.F. = 1000 A	5 A x S.F. = 5000 A
Actual apparent power =	300 VA x S.F. = 300000 VA	1500 VA x S.F. = 1500000 VA
Actual active energy =	7200 Wh x S.F. = 7200000 Wh	7200 Wh x S.F. = 7200000 Wh

6.64 Power measurement module UR20-3EM-400V-AC-RC

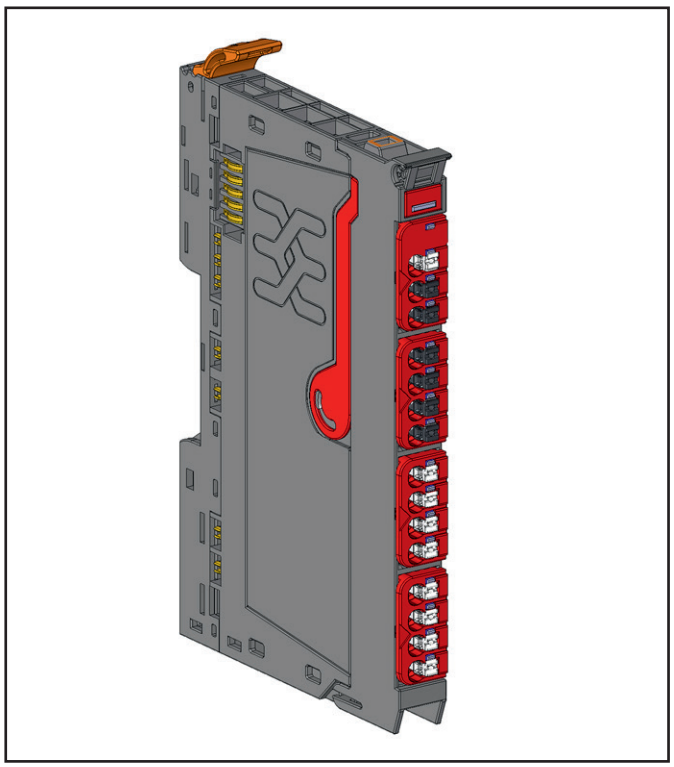

Power measurement module UR20-3EM-400V-AC-RC (Item No. 2920850000)

The UR20-3EM-400V-AC-RC power measurement module can measure and process all relevant measurands of one or three phase and neutral current consumers (up to 520 V AC phase-to-phase voltage):

- Current (RMS/average/peak)
- Voltage (RMS/average/peak)
- Reactive, apparent and active power
- Power consumption
- Power factor
- Frequency
- Voltage upper and lower alarm
- Current upper and lower alarm

Rogowski coils are required for current measurements with up to 1 A current input. Scaling needs to be done externally by PLC or function blocks if other current conversion ratio are used than the default stated in technical data. Take note current input circuits can be damaged if voltages greater than 2 V with reference to neutral is applied.
The raw measured values are transferred via the connected fieldbus to a superior PLC or a control system.
The module delivers input process data to the fieldbus via six measurement data (16 bit each) and three energy counter data (32 bit each). The data are updated within one millisecond from the module to the coupler. The content of each measurement data and energy counter data can be chosen by first selecting the phase, then the parameter of interest. Additionaly, several limits can be parameterised. Exceeding the voltage and current upper and lower limit will trigger the process alarms and the status word will be updated. Exceeding other limits will only cause the status word being updated. Latching of status word is possible via parameterisation. A status LED is assigned to each channel.

Observe the following instructions when using the module:

- Interruption of the power supply for less than 1 ms has no impact. In the case of longer interruptions, the bus communication will be shut off.
- The rogowski coil wiring polarity must be observed in order to get correct power polarity and energy measurement.
- Single phase measurement is possible by connecting to phase 1 of the module. In case of split phase, 3 wire system, connect to phase 1 and 2 of the module.
- The module can be used to measure 3 phase power system with various earthing system such as TT, TN-C, TN-C-S, IT etc. Please note that the overvoltage category will be reduced from III to II if any of the nominal phase voltage to earth is greater than 300 V.
- For proper current measurement, current sensor voltage output should not exceed ±0.5 V.

⚠ WARNING

Possible danger to life!

► Always disconnect the power supply to the station before working with the module and secure the station against being switched on again.

⚠ WARNING

Possible danger to life!

The touch-safe protection of this module is only provided with the DIN rail earthed properly.

► Make sure that the DIN rail is connected to PE by earth terminals before commissioning the module.

ATTENTION

The module can be destroyed by a hot swap.

► Make sure that the input contacts are voltage-free before carrying out a hot swap of the electronic unit.



Name	Function
N	Neutral
L1	Line 1
L1	Line 1
L2	Line 2
L2	Line 2
L3	Line 3
L3	Line 3
I1_P	Line 1 current input positive
I1_N	Line 1 current input negative
I2_P	Line 2 current input positive
I2_N	Line 2 current input negative
I3_P	Line 3 current input positive
I3_N	Line 3 current input negative
IN_P	Neutral current input positive
IN_N	Neutral current input negative

Connections UR20-3EM-400V-AC-RC

Application with current transformer

⚠ WARNING

Hazardous voltage on open current path!

- ► Never use a transformer in no-load operation.
- ► Always connect the transformer with the power measurement module **before** you start to operate the transformer.
- ► Never unlock the connector frame of the module during opreration with a transformer.

Application examples

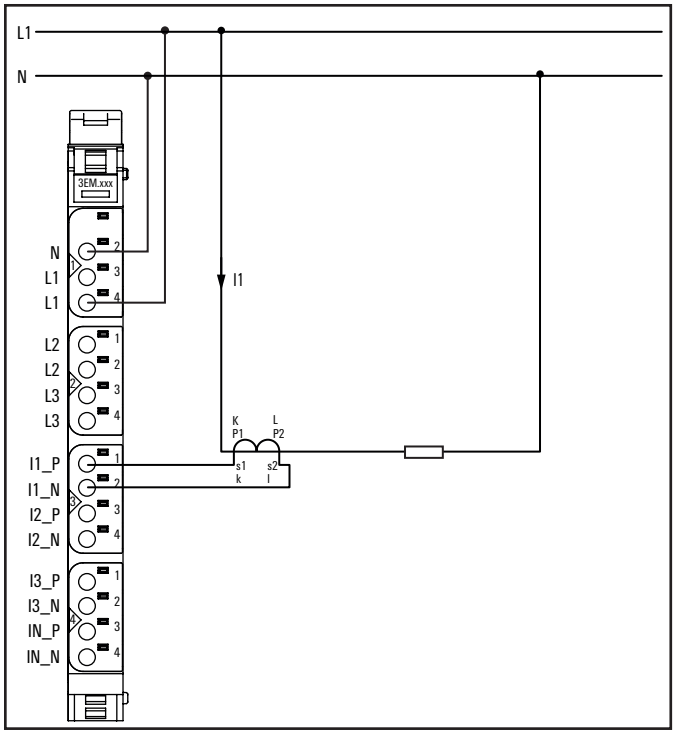

UR20-3EM-400V-AC-RC application: 1-phase connection

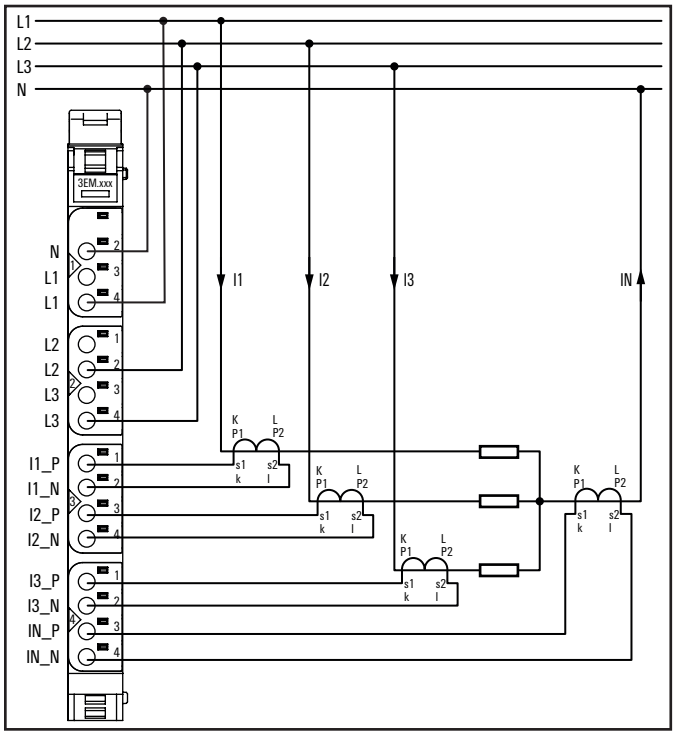

UR20-3EM-400V-AC-RC application: 3-phase 4-wire, 3 voltage inputs

The meter topology (MT) MT0 can be used for a 3-phase 4-wire system where all 3 phase voltages and currents are measured. Measurement of neutral current is optional. If a neutral wire is not available in the application, the measurement is still possible as the module builds a virtual zero point with the 3 phase voltages. However, measurement errors increases with any unbalancing of the 3 phase systems.

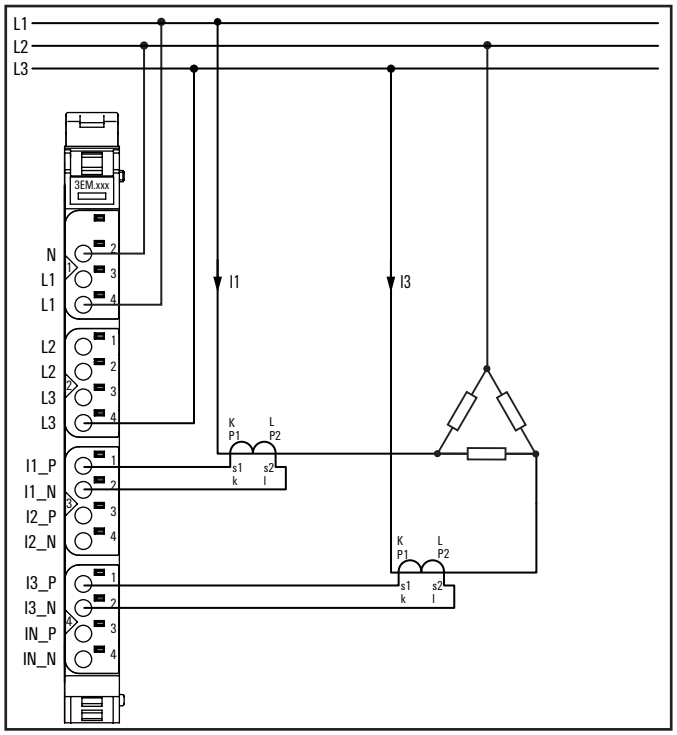

UR20-3EM-400V-AC-RC application: 3-phase 3-wire, delta connection

The MT1 topology can be used for a 3-phase 3-wire system where only 2 line voltages and currents are measured (2 Wattmeter method). It can also be used for a 3-phase 4-wire system when there is no neutral current flowing. For this topology, L2 must be connected as neutral on the module. V_{L2} is computed as line voltage $V_{L1 - L3}$.

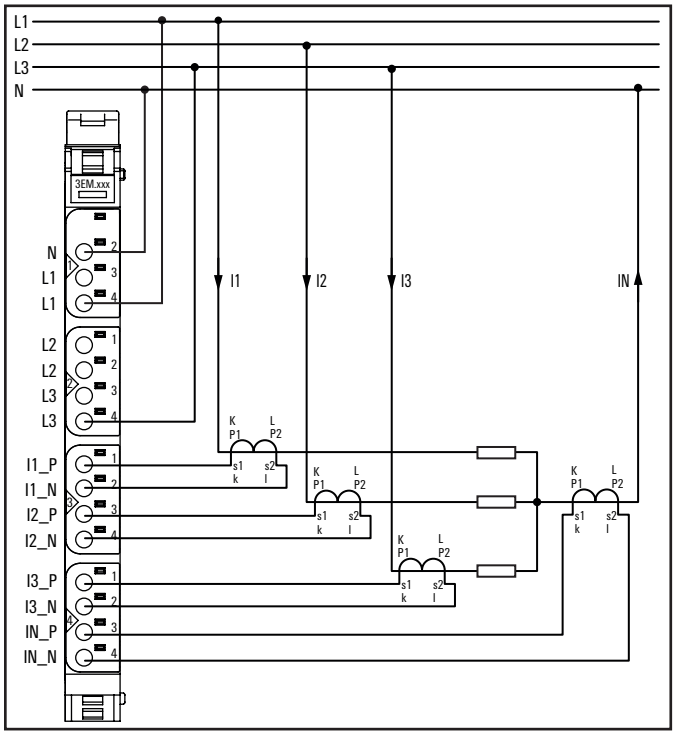

UR20-3EM-400V-AC-RC application: 3-phase-4-wire, 2 voltage inputs

The MT2 topology can be used for 3-phase 4-wire system where only 2 phase voltages and 3 currents are measured. Measurement of neutral current is optional. V_{L2} is computed as $-V_{L1}-V_{L3}$ based on balance system assumptions.

Measurement options depending on the meter topology (MT)

Measured value	MT0 [7]	MT1	MT2
RMS Voltage	x	x [1), 2)]	x [6)]
RMS Current	x	x [1)]	x
Peak Voltage	x	x [1), 2)]	x [6)]
Peak Current	x	x [1)]	x
Line Frequency	x	x [1), 2)]	x
Harmonic X RMS Voltage	x	x [1), 2)]	x [6)]
Harmonic Y RMS Voltage	x	x [1), 2)]	x [6)]
Harmonic Z RMS Voltage	x	x [1), 2)]	x [6)]
Harmonic X RMS Current	x	x [1)]	x
Harmonic Y RMS Current	x	x [1)]	x
Harmonic Z RMS Current	x	x [1)]	x
Power Factor	x	–	x
Total Harmonic Distortion Voltage	x	x [1), 2)]	x
Total Harmonic Distortion Current	x	x [1)]	x
RMS Voltage Average -3ph	x	–	x
RMS Current Average -3ph	x	–	x
RMS Current (Neutral)	x	–	x
Total Power Factor -3ph	x	x [3), 4)]	x
Active Power	x	–	x
Reactive Power	x [5)]	–	x [5)]
Apparent Power	x	–	x
Fundamental Active Power	x	–	x
Fundamental Reactive Power	x	–	x
Fundamental Apparent Power	x	–	x
Harmonic X Active Power	x	–	x
Harmonic Y Active Power	x	–	x
Harmonic Z Active Power	x	–	x
Harmonic X Reactive Power	x	–	x
Harmonic Y Reactive Power	x	–	x
Harmonic Z Reactive Power	x	–	x
Harmonic X Apparent Power	x	–	x
Harmonic Y Apparent Power	x	–	x
Harmonic Z Apparent Power	x	–	x
Active Power -3ph	x	x [3)]	x
Reactive Power -3ph	x [5)]	x [3), 4)]	x [5)]
Apparent Power -3ph	x	x [3), 4)]	x
Fundamental Active Power -3ph	x	x [3)]	x
Fundamental Reactive Power -3ph	x	x [3), 4)]	x
Fundamental Apparent Power -3ph	x	x [3), 4)]	x
Fundamental RMS Voltage	x	x [1), 2)]	x [6)]
Fundamental RMS Current	x	x [1)]	x

Measurement options depending on the meter topology (MT)

Energy Counter	MT0 [7]	MT1	MT2
Active Energy Received	x	–	x
Active Energy Delivered	x	–	x
Apparent Energy	x	–	x
Fundamental Reactive Leading Energy	x	–	x
Fundamental Reactive Lagging Energy	x	–	x
Fundamental Active Energy Received	x	–	x
Fundamental Active Energy Delivered	x	–	x
Active Energy Received -3ph	x [8)]	x [3)]	x [8)]
Active Energy Delivered -3ph	x [8)]	x [3)]	x [8)]
Fundamental Reactive Leading Energy -3ph	x [8)]	x [3), 4)]	x [8)]
Fundamental Reactive Lagging Energy -3ph	x [8)]	x [3), 4)]	x [8)]

x Measurement available
– Measurement will return invalid value

1) Line measurement instead of phase
2) When phase selected is L1, measurement is for L1-L2
   When phase selected is L2, measurement is for L1-L3
   When phase selected is L3, measurement is for L3-L2
3) Calculated using the 2-wattmeter method assuming that the sum of 3 line currents is 0
4) Valid only for 3-phase balanced system and load
5) Calculated using power triangle and valid only if harmonics is not present. If harmonics is present, you can read the fundamental reactive power instead for a more representative value
6) L2 voltage is calculated assuming that the sum of 3 phase voltages is 0
7) If a neutral wire is not available in the application, the measurement is still possible as the module builds a virtual zero point with the 3 phase voltages. However, measurement errors increases with any unbalancing of the 3-phase systems.
8) Take note that the total energy counter will oveflow much earlier than the individual phase energy counter as they are represented by the same number of bits

MT0: 3-phase 4-wire, 3 voltage inputs
MT1: 3-phase 3-wire, delta
MT2: 3-phase 4-wire, 2 voltage inputs



	Module status LED Green: Communication over the system bus Red: Error
1.2	
1.3	Yellow: Voltage >33 V_{rms} at L1 Yellow flashing: Running light with 2.1 and 2.3 indicates phase sequence
1.4	Red: Overvoltage limit exceeded at L1
2.1	Yellow: Voltage >33 V_{rms} at L2 Yellow flashing: Running light with 1.3 and 2.3 indicates phase sequence
2.2	Red: Overvoltage limit exceeded at L2
2.3	Yellow: Voltage >33 V_{rms} at L3 Yellow flashing: Running light with 1.3 and 2.1 indicates phase sequence
2.4	Red: Overvoltage limit exceeded at L3
3.1	Red: Overcurrent limit exceeded at L1
3.2	
3.3	Red: Overcurrent limit exceeded at L2
3.4	
4.1	Red: Overcurrent limit exceeded at L3
4.2	
4.3	Red: Overcurrent limit exceeded at N
4.4	
	Overvoltage or overcurrent limit is defined as 10 % of the nominal input voltage or current. Nominal input current 1 A Nominal input voltage 300 V_{eff} AC (Star) or 520 V_{eff} AC (Delta)

The yellow LEDs for 1.3, 2.1 and 2.3 are not displayed correctly in the Webserver.

LED indicators UR20-3EM-400V-AC-RC, troubleshooting see Chapter 12

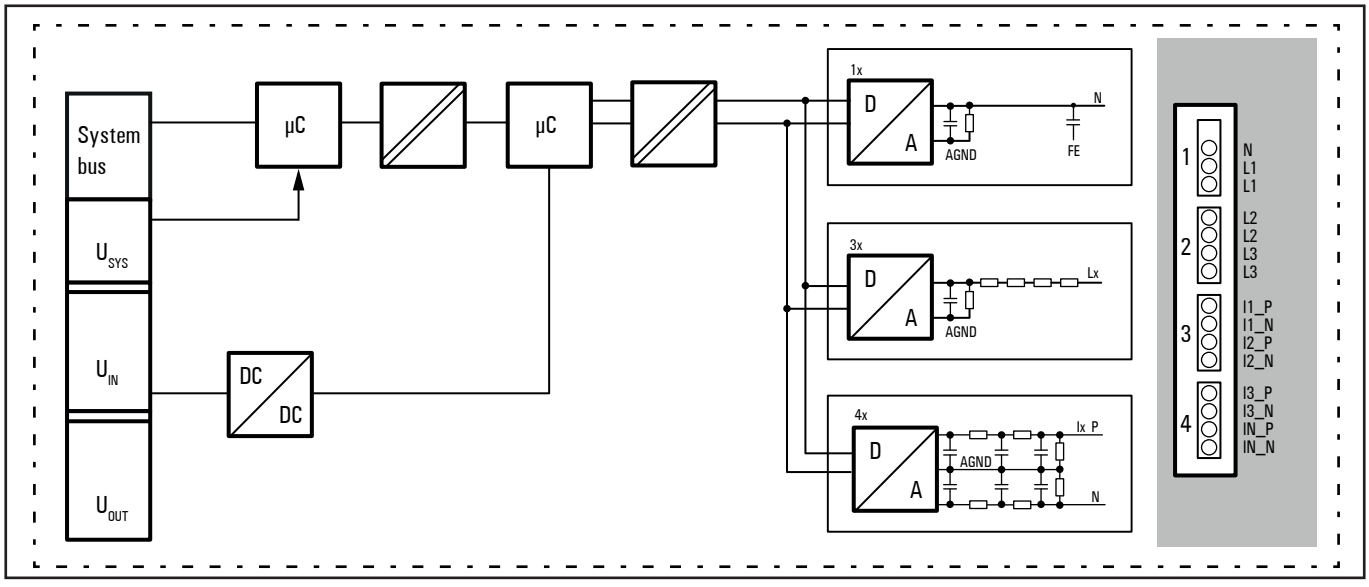

Block diagram UR20-3EM-400V-AC-RC

Technical data UR20-3EM-400V-AC-RC (Item No. 2920850000)

System data	
Data	Process, parameter and diagnostic data depend on the coupler used, see coupler description
Interface	u-remote system bus
System bus transfer rate	48 Mbps / 192 Mbps
Connections	
Number	3 Phases, 1 Neutral, 4 pairs of current transformer conductors
Harmonics analysis	up to 43rd
Measuring methods	Converter/ Current transformer / Voltage transformer
Overvoltage category	III (acc. to IEC 61010-1) II (acc. to IEC 61010-1) for systems with nominal voltage to earth > 300 V
Frequency of the supply system	45 ... 65 Hz
Input impedance voltage	4.0022 MΩ
Isolation	Reinforced isolation to system and power rail and basic isolation to functional earth
Measuring accuracy[1)]	0.25 % in relation to final value (U / I), 0.5 % for the calculated values (the final value refers to the converted value when process data returns 27648 in decimal) 0.75 % for Harmonics
Temperature coefficient	U / I and calculated values 75 ppm/K
Input impedance current (differential)	40 kΩ
Input current cable	shielded (grounded at both ends)
Rated voltage	300 V_{eff} AC (L–N), 520 V_{eff} AC (L–L) according to table I.1 of IEC 61010-1:2010/AMD1:2016/COR1:2019
Rated input current	112.5 mV_{eff} / 1 A_{eff} (50 Hz) 135 mV_{eff} / 1 A_{eff} (60 Hz)
Resolution (per measurement)	16 Bit (internally 24 Bit) 32 Bit for energy counter
Sampling rate of voltage and current measurement	Sigma Delta ADC with 1.024 MHz (bandwidth of interest from 40 Hz to 3.3 kHz)
Data storage	Energy counters saved at 15 min interval
Module diagnosis	yes
Individual channel diagnosis	yes
Supply	
Supply voltage	24 V DC +20%/-15%, according to IEC 61131-2 24 V DC +30%/-25%, according to DNV
Current consumption from system current path I_{SYS}	8 mA
Current consumption from input current path I_{IN}	< 35 mA
General data	
Weight (operational status)	88 g
ATEX/UKEX conform	no
For additional general data, see Section 3.4	

1) The accuracy specified can only be achieved at 50 Hz and 60 Hz as internal phase compensation is done at 50 Hz and 60 Hz to match the 90 degree phase shift of the RC sensors. If the power grid is at other frequency or RC sensor introduces additional phase error, slight phase correction can be done via the **Phase shifting Lx** parameters provided for more accurate power measurement.

Overview of the editable parameters UR20-3EM-400V-AC-RC (Order according to web server)

Name	Options[1)]	Description / data width	Default
Meter topology	3P4W, 3 voltage inputs (0) / 3P3W delta (1) / 3P4W, 2 voltage inputs (2)	2 Bit	3P4W, 3 voltage inputs
Line frequency	50 Hz (0) / 60 Hz (1)	1 Bit	50 Hz
Harmonic X	1 ... 43	1 = fundamental	3
Harmonic Y	1 ... 43	1 = fundamental	5
Harmonic Z	1 ... 43	1 = fundamental	7
Voltage low alarm	disabled (0) / enabled (1)	1 Bit	disabled
Voltage low limit	0 ... 520 V (0 ... 27648)	Positive values only (16 Bit)	0
Voltage high alarm	disabled (0) / enabled (1)	1 Bit	disabled
Voltage high limit	0 ... 520 V (0 ... 27648)	Positive values only (16 Bit)	27648
Voltage sag alarm	disabled (0) / enabled (1)	1 Bit	disabled
Voltage sag limit	0 ... 520 V (0 ... 27648)		0
Current low alarm	disabled (0) / enabled (1)	1 Bit	disabled
Current low limit	0 ... 1 A (0 ... 27648)	Positive values only (16 Bit)	0
Current high alarm	disabled (0) / enabled (1)	1 Bit	disabled
Current high limit	0 ... 1 A (0 ... 27648)	Positive values only (16 Bit)	27648
Current imbalance alarm	disabled (0) / enabled (1)	1 Bit	disabled
Current imbalance limit	0 ... 100% (0 ... 16383)	Positive values only (16 Bit)	16383
Neutral current mismatch alarm	disabled (0) / enabled (1)	1 Bit	disabled
Neutral current mismatch limit	0 ... 1 A (0 ... 27648)		27648
Frequency low alarm	disabled (0) / enabled (1)	1 Bit	disabled
Frequency low limit	45 ... 65 Hz (5760 ... 8320)	Positive values only (16 Bit)	5760
Frequency high alarm	disabled (0) / enabled (1)	1 Bit	disabled
Frequency high limit	45 ... 65 Hz (5760 ... 8320)	Positive values only (16 Bit)	8320
Power factor alarm	disabled (0) / enabled (1)	1 Bit	disabled
Power factor low limit	0 ... 1 (0 ... 16383)	Positive values only (16 Bit)	0
Status word latch	disabled (0) / enabled (1)	1 Bit	disabled
Diagnostic alarm	disabled (0) / enabled (1)	1 Bit	disabled
Phase shifting L1	−1.107° ... 1.107° (50 Hz) (-63 ... 63) −1.329° ... 1.329° (60 Hz) (-63 ... 63)	16 Bit Enter phase shift here to correct the phase error introduced by CT. Negative values indicate current lead voltage, and vice versa.	0
Phase shifting L2		see Phase shifting L1	
Phase shifting L3		see Phase shifting L1	
Phase 0	L1 (0) / L2 (1) / L3 (2)		L1
Measured value 0	disabled (0)		disabled
	RMS voltage (1)		
	RMS current (2)		
	Peak voltage (3)		
	Peak current (4)		
	Line frequency (5)		

1) Values in brackets for Modbus-TCP (firmware version 02.00.00 and higher), CANopen, EtherCAT and EtherNet/IP via module parameter class

Overview of the editable parameters UR20-3EM-400V-AC-RC (Order according to web server)

Name	Options[1)]	Description / data width	Default
	Harmonic X RMS voltage (6)		
	Harmonic Y RMS voltage (7)		
	Harmonic Z RMS voltage (8)		
	Harmonic X RMS current (9)		
	Harmonic Y RMS current (10)		
	Harmonic Z RMS current (11)		
	Power factor (12)	Absolute value only	
	THD voltage (13)		
	THD current (14)		
	RMS voltage average -3ph (15)		
	RMS current average -3ph (16)		
	RMS current neutral (17)		
	Total power factor -3ph (18)	Total Active Power/ Total Apparent Power (Absolute value only)	
	Active power (19)		
	Reactive power (20)	This is only accurate if no harmonics is present. With harmonics present, you can read fundamental reactive power instead for a more representative value. If the line frequency is parametrised differently than the system to be measured, the reactive power cannot be calculated correctly and incorrect values will be displayed.	
	Apparent power (21)		
	Fundamental active power (22)		
	Fundamental reactive power (23)		
	Fundamental apparent power (24)		
	Harmonic X active power (25)		
	Harmonic Y active power (26)		
	Harmonic Z active power (27)		
	Harmonic X reactive power (28)		
	Harmonic Y reactive power (29)		
	Harmonic Z reactive power (30)		
	Harmonic X apparent power (31)		
	Harmonic Y apparent power (32)		
	Harmonic Z apparent power (33)		
	Active power -3ph (34)		
	Reactive power -3ph (35)		
	Apparent power -3ph (36)		
	Fundamental active power -3ph (37)		
	Fundamental reactive power -3ph (38)		
	Fundamental apparent power -3ph (39)		
	Fundamental RMS voltage (40)		
	Fundamental RMS current (41)		

1) Values in brackets for Modbus-TCP (firmware version 02.00.00 and higher), CANopen, EtherCAT and EtherNet/IP via module parameter class

Overview of the editable parameters UR20-3EM-400V-AC-RC (Order according to web server)

Name	Options[1)]	Description / data width	Default
Phase 1		see Phase 0	
Measured value 1		see Measured value 0	
Phase 2		see Phase 0	
Measured value 2		see Measured value 0	
Phase 3		see Phase 0	
Measured value 3		see Measured value 0	
Phase 4		see Phase 0	
Measured value 4		see Measured value 0	
Phase 5		see Phase 0	
Measured value 5		see Measured value 0	
Phase 6	L1 (0) / L2 (1) / L3 (2)		L1
Energy counter 0	disabled (0)		disabled
	Active energy received (1)		
	Active energy delivered (2)		
	Apparent energy (3)		
	Fundamental reactive leading energy (4)		
	Fundamental reactive lagging energy (5)		
	Fundamental active energy received (6)		
	Fundamental active energy delivered (7)		
	Active energy received -3ph (8)		
	Active energy delivered -3ph (9)		
	Fundamental reactive leading. energy -3ph (10)		
	Fundamental reactive lagging energy -3ph (11)		
Phase 7		see Phase 6	
Energy counter 1		see Energy counter 0	
Phase 8		see Phase 6	
Energy counter 2		see Energy counter 0	

1) Values in brackets for Modbus-TCP (firmware version 02.00.00 and higher), CANopen, EtherCAT and EtherNet/IP via module parameter class

Please see more details for conversion in the table “Measuring ranges” on page 653.

Calculation of reactive power

$$Q = \sqrt{S^2 - P^2}$$

Calculation of current imbalance

$$\text{Current imbalance} = \frac{\max(|I_{RMS}L1 - I_{RMS}Average|\ ,\ |I_{RMS}L2 - I_{RMS}Average|\ ,\ |I_{RMS}L3 - I_{RMS}Average|)}{I_{RMS}Average}$$

Diagnostic data UR20-3EM-400V-AC-RC

Name	Byte	Bit	Description	Default
Error indicator	0	0	Module error	0
		1	Internal error	0
		2	External error	0
		3	Channel error	0
		4	Error	0
		5	Power supply fault	0
		6	Reserved	0
		7	Parameter error	0
Module type	1	0	Module Type	0x05
		1		
		2		
		3		
		4	Channel information available	1
		5	Reserved	0
		6	Reserved	0
		7	Reserved	0
Error byte 2	2	0 ... 7	Reserved	0
Error byte 3	3	0 ... 2	Reserved	0
		3	Internal diagnostic FIFO full	0
		4	Communication fault	0
		5	Reserved	0
		6	Process alarm lost	0
		7	Reserved	0
Channel type	4	0	Channel type	0x64
		1		
		2		
		3		
		4		
		5		
		6		
		7	Reserved	0
Diagnostic bits per channel	5		Number of diagnostic bit per channel	16
Number of channels	6			1
Channel error	7	0	Error at channel 0	0
		1 ... 7	Reserved	0
	8 ... 10	0 ... 7	Reserved	0

Diagnostic data UR20-3EM-400V-AC-RC

Name	Byte	Bit	Description	Default
Channel 0 error	11	0	Voltage upper limit exceeded L1	0
		1	Voltage upper limit exceeded L2	0
		2	Voltage upper limit exceeded L3	0
		3	Current upper limit exceeded L1	0
		4	Current upper limit exceeded L2	0
		5	Reserved	0
		6	Current upper limit exceeded L3	0
		7	Current upper limit exceeded N	0
	12	0 ... 7	Reserved	0
Channel 1 error ... Channel 15 error	13 ... 42	0 ... 7	Reserved	0
Time stamp	43-46		time stamp [µs] (32bit)	

Process data inputs UR20-3EM-400V-AC-RC

Channel	Byte	Format	Description
0	IB0	int16	Measured value 0
	IB1		
	IB2	int16	Measured value 1
	IB3		
	IB4	int16	Measured value 2
	IB5		
	IB6	int16	Measured value 3
	IB7		
	IB8	int16	Measured value 4
	IB9		
	IB10	int16	Measured value 5
	IB11		
	IB12	uint32	Energy counter 0
	IB13		
	IB14		
	IB15		
	IB16	uint32	Energy counter 1
	IB17		
	IB18		
	IB19		
	IB20	uint32	Energy counter 2
	IB21		
	IB22		
	IB23		
	IB24	Word	Status word
	IB25		
	IB26	uint32	Mail box data
	IB27		
	IB28		
	IB29		
	IB30	Byte	Status word address
	IB31	Byte	Mail box address

Process data outputs UR20-3EM-400V-AC-RC

Channel	Byte	Bit	Format	Description	Value
0	QB0	QX0.0	Bit	Reset all energy counters	0..1
		QX0.1	Bit	Reserved	
		QX0.2	Bit	Reserved	
		QX0.3	Bit	Clear status latch	0..1
		QX0.4	Bit	Reserved	
		QX0.5	Bit	Reserved	
		QX0.6	Bit	Reserved	
		QX0.7	Bit	Save energy counter[1)]	0..1
	QB1		Byte	Key to counter reset	0xAF
	QB2		Byte	Status word address	0..3
	QB3		Byte	Mailbox address	0..128
	QB4 ... QB7			Reserved	

1) This bit is only applicable for rising edges to avoid overwriting of the EEPROM. Excessive saving of the energy counter could reduce the service life of the memory.

Process alarm UR20-3EM-400V-AC-RC

Name	Byte	Bit	Function
Alarm	0	0	Reserved
		1	Voltage upper limit exceeded at L1
		2	Voltage upper limit exceeded at L2
		3	Voltage upper limit exceeded at L3
		4	Current upper limit exceeded at L1
		5	Current upper limit exceeded at L2
		6	Current upper limit exceeded at L3
		7	Reserved
Alarm	1	0	Reserved
		1	Voltage lower limit underrun at L1
		2	Voltage lower limit underrun at L2
		3	Voltage lower limit underrun at L3
		4	Current lower limit underrun at L1
		5	Current lower limit underrun at L2
		6	Current lower limit underrun at L3
		7	Reserved
Time stamp	2 ... 3		The two lowest bytes of the internal 32-bit timer

Mailbox

The process data inputs are limited and not sufficient to map the huge amount of data available. Therefore, a mailbox system is implemented. Using a mailbox address enables to read back data that are not pre-mapped to the process data inputs.

► In the process data output byte, set the mailbox address for the data of interest.

Mailbox data returned will be in uint32 data format and conversion needs to be done based on the mailbox address and conversion formula provided in this manual.

Mailbox address

Address	Mailbox data
0	Disabled
1	RMS voltage L1
2	RMS voltage L2
3	RMS voltage L3
4	RMS current L1
5	RMS current L2
6	RMS current L3
7	Peak voltage L1
8	Peak voltage L2
9	Peak voltage L3
10	Peak current L1
11	Peak current L2
12	Peak current L3
13	Line frequency L1
14	Line frequency L2
15	Line frequency L3
16	Harmonic X RMS voltage L1
17	Harmonic X RMS voltage L2
18	Harmonic X RMS voltage L3
19	Harmonic Y RMS voltage L1
20	Harmonic Y RMS voltage L2
21	Harmonic Y RMS voltage L3
22	Harmonic Z RMS voltage L1
23	Harmonic Z RMS voltage L2
24	Harmonic Z RMS voltage L3
25	Harmonic X RMS current L1
26	Harmonic X RMS current L2
27	Harmonic X RMS current L3
28	Harmonic Y RMS current L1
29	Harmonic Y RMS current L2
30	Harmonic Y RMS current L3
31	Harmonic Z RMS current L1
32	Harmonic Z RMS current L2
33	Harmonic Z RMS current L3
34	Power factor L1
35	Power factor L2
36	Power factor L3
37	THD voltage L1
38	THD voltage L2

Mailbox address

Address	Mailbox data
39	THD voltage L3
40	THD current L1
41	THD current L2
42	THD current L3
43	RMS voltage average -3ph
44	RMS current average -3ph
45	RMS current neutral
46	Total power factor -3ph
47	Active power L1
48	Active power L2
49	Active power L3
50	Reactive power L1
51	Reactive power L2
52	Reactive power L3
53	Apparent power L1
54	Apparent power L2
55	Apparent power L3
56	Fundamental active power L1
57	Fundamental active power L2
58	Fundamental active power L3
59	Fundamental reactive power L1
60	Fundamental reactive power L2
61	Fundamental reactive power L3
62	Fundamental apparent power L1
63	Fundamental apparent power L2
64	Fundamental apparent power L3
65	Harmonic X active power L1
66	Harmonic X active power L2
67	Harmonic X active power L3
68	Harmonic Y active power L1
69	Harmonic Y active power L2
70	Harmonic Y active power L3
71	Harmonic Z active power L1
72	Harmonic Z active power L2
73	Harmonic Z active power L3
74	Harmonic X reactive power L1
75	Harmonic X reactive power L2
76	Harmonic X reactive power L3
77	Harmonic Y reactive power L1
78	Harmonic Y reactive power L2
79	Harmonic Y reactive power L3
80	Harmonic Z reactive power L1
81	Harmonic Z reactive power L2
82	Harmonic Z reactive power L3
83	Harmonic X apparent power L1
84	Harmonic X apparent power L2
85	Harmonic X apparent power L3
86	Harmonic Y apparent power L1
87	Harmonic Y apparent power L2
88	Harmonic Y apparent power L3
89	Harmonic Z apparent power L1

Mailbox address

Address	Mailbox data
90	Harmonic Z apparent power L2
91	Harmonic Z apparent power L3
92	Active power -3ph
93	Reactive power -3ph
94	Apparent power -3ph
95	Fundamental active power -3ph
96	Fundamental reactive power -3ph
97	Fundamental apparent power -3ph
98	Active energy received L1
99	Active energy received L2
100	Active energy received L3
101	Active energy delivered L1
102	Active energy delivered L2
103	Active energy delivered L3
104	Apparent energy L1
105	Apparent energy L2
106	Apparent energy L3
107	Fundamental reactive leading energy L1
108	Fundamental reactive leading energy L2
109	Fundamental reactive leading energy L3
110	Fundamental reactive lagging energy L1
111	Fundamental reactive lagging energy L2
112	Fundamental reactive lagging energy L3
113	Fundamental active energy received L1
114	Fundamental active energy received L2
115	Fundamental active energy received L3
116	Fundamental active energy delivered L1
117	Fundamental active energy delivered L2
118	Fundamental active energy delivered L3
119	Active energy received -3ph
120	Active energy delivered -3ph
121	Fundamental reactive leading energy -3ph
122	Fundamental reactive lagging energy -3ph
123	Fundamental RMS voltage L1
124	Fundamental RMS voltage L2
125	Fundamental RMS voltage L3
126	Fundamental RMS current L1
127	Fundamental RMS current L2
128	Fundamental RMS current L3

Status word 0

Byte	Bit	Function
0	0	Phase sequence L1-L2-L3 detected
	1	Phase sequence L1-L3-L2 detected
	2	Voltage detected at L1
	3	Voltage detected at L2
	4	Voltage detected at L3
	5	Reserved
	6	Reserved
	7	Reserved
1	0	Status Error at L1
	1	Status Error at L2
	2	Status Error at L3
	3	Current imbalance detected
	4	Neutral current mismatch detected
	5	Reserved
	6	Reserved
	7	Reserved

Status word 1 for L1, 2 for L2, 3 for L3

Byte	Bit	Function
0	0	Voltage lower limit underrun
	1	Voltage upper limit exceeded
	2	Voltage sag
	3	Current lower limit underrun
	4	Current upper limit exceeded
	5	Reserved
	6	Reserved
	7	Reserved
1	0	Frequency lower limit underrun
	1	Frequency upper limit exceeded
	2	Power factor lower limit underrun
	3	Reserved
	4	Reserved
	5	Reserved
	6	Reserved
	7	Reserved

A status error will be updated based on actual event happening, no latching default.
To enable status latching, use the **Status word latch** parameter, if needed.
To clear the latched status, use the **Clear Status Latch** bit in the output process mapping. In the process data output byte, set the status word address 0, 1, 2 or 3 to read back the respective status word.

Measuring ranges and conversions UR20-3EM-400V-AC-RC, scaling factor see following section

Measuring range	Value	Decimal (D)	Hexadecimal	Range	Conversion
RMS voltage (U) RMS voltage average -3ph (U) Harmonic RMS voltage (U) Voltage lower/upper limit (U)	611.463 V_{RMS}	32511	0x7EFF	Overloading	
	520 V_{RMS}	27648	0x6C00	Nominal range	D = 27648 x U / 520 V_{RMS} U = D x 520 V_{RMS} / 27648
	260 V_{RMS}	13824	0x3600		
	0 V_{RMS}	0	0x0000		
Peak voltage (U) Voltage sag limit (U)	864.279 V	32511	0x7EFF	Overloading	
	735 V	27648	0x6C00	Nominal range	D = 27648 x U / 735 V U = D x 735 V / 27648
	367.5 V	13824	0x3600		
	0 V	0	0x0000		
RMS current (I) RMS current average -3ph (I) Harmonic RMS current (I) Current lower/upper limit (I)	1.176 A_{RMS}	32511	0x7EFF	Overloading	
	1 A_{RMS}	27648	0x6C00	Nominal range	D = 27648 x I / 1 A_{RMS} I = D x 1 A_{RMS} / 27648
	0.5 A_{RMS}	13824	0x3600		
	0 A_{RMS}	0	0x0000		
Peak current (I)	1.663 A	32511	0x7EFF	Overloading	
	1.414 A	27648	0x6C00	Nominal range	D = 27648 x I / 1.414 A I = D x 1.414 A/ 27648
	0.707 A	13824	0x3600		
	0 A	0	0x0000		
Neutral current mismatch limit (I)	1 A	27648	0x6C00	Nominal range	D = 27648 x I / 1 A I = D x 1 A/ 27648
	0.5 A	13824	0x3600		
	0 A	0	0x0000		
Line frequency (f) Frequency lower limit (f) Frequency upper limit (f)	65 Hz	8320	0x2080	Nominal range	D = 128 x f [Hz] f = D / 128
	60 Hz	7680	0x1E00		
	50 Hz	6400	0x1900		
	45 Hz	5760	0x1680		
Current imbalance limit (CI) Total Harmonic Distortion (THD)	100.00 %	16383	0x3FFF	Nominal range	D = 16383 x CI / 100 CI = D x 100 / 16383 D = 16383 x THD / 100 THD = D x 100 / 16383
	75.00 %	12287	0x2FFF		
	50.00 %	8191	0x1FFF		
	0.00 %	0	0x0000		
Power factor (PF) Total power factor -3ph (PF)	1	16383	0x3FFF	Nominal range	D = 16383 x PF PF = D / 16383
	0.750	12287	0x2FFF		
	0.500	8191	0x1FFF		
	0.000	0	0x0000		

Measuring ranges and conversions UR20-3EM-400V-AC-RC, scaling factor see following section

Measuring range	Value	Decimal (D)	Hexadecimal	Range	Conversion
Active power (P) Fundamental active power (P) Harmonic active power (P)	611.463 W	32511	0x7EFF	Overloading	
	520 W	27648	0x6C00	Nominal range	D = 27648 x P / 520 W P = D x 520 W / 27648
	260 W	13824	0x3600		
	0 W	0	0x0000		
	-260 W	-13824	0xCA00		
	-520 W	-27648	0x9400		
	-611.463 W	-32511	0x8101	Underloading	
Active power -3ph (P) Fundamental active power -3ph (P)	1834.388 W	32511	0x7EFF	Overloading	
	1560 W	27648	0x6C00	Nominal range	D = 27648 x P / 1560 W P = D x 1560 W / 27648
	780 W	13824	0x3600		
	0 W	0	0x0000		
	-780 W	-13824	0xCA00		
	-1560 W	-27648	0x9400		
	-1834.388 W	-32511	0x8101	Underloading	
Reactive power (Q) Fundamental reactive power (Q) Harmonic reactive power (Q)	611.463 var	32511	0x7EFF	Overloading	
	520 var	27648	0x6C00	Nominal range	D = 27648 x Q / 520 var Q = D x 520 var / 27648
	260 var	13824	0x3600		
	0 var	0	0x0000		
	-260 var	-13824	0xCA00		
	-520 var	-27648	0x9400		
	-611.463 var	-32511	0x8101	Underloading	
Reactive power -3ph (Q) Fundamental reactive power -3ph (Q)	1834.388 var	32511	0x7EFF	Overloading	
	1560 var	27648	0x6C00	Nominal range	D = 27648 x Q / 1560 var Q = D x 1560 var / 27648
	780 var	13824	0x3600		
	0 var	0	0x0000		
	-780 var	-13824	0xCA00		
	-1560 var	-27648	0x9400		
	-1834.388 var	-32511	0x8101	Underloading	
Apparent power (S) Fundamental apparent power (S) Harmonic apparent power (S)	611.463 VA	32511	0x7EFF	Overloading	
	520 VA	27648	0x6C00	Nominal range	D = 27648 x S / 520 VA S = D x 520 VA / 27648
	260 VA	13824	0x3600		
	0 VA	0	0x0000		

Measuring ranges and conversions UR20-3EM-400V-AC-RC, scaling factor see following section

Measuring range	Value	Decimal (D)	Hexadecimal	Range	Conversion
Apparent power -3ph (S) Fundamental apparent power -3ph (S)	1834.388 VA	32511	0x7EFF	Overloading	
	1560 VA	27648	0x6C00	Nominal range	D = 27648 x S / 1560 VA S = D x 1560 VA / 27648
	780 VA	13824	0x3600		
	0 VA	0	0x0000		
Active energy (E) Fundamental active energy (E) Active energy -3ph (E)	429490176.000 Wh	4294901760	0xFFFF0000	Nominal range	D = 10 x E Wh E = D / 10 Wh
	214748364.700 Wh	2147483647	0x7FFFFFFF		
	0.000 Wh	0	0x00000000		
Fundamental reactive leading energy (E) Fundamental reactive lagging energy (E) Fundamental reactive leading energy -3ph (E) Fundamental reactive lagging energy -3ph (E)	429490176.000 Varh	4294901760	0xFFFF0000	Nominal range	D = 10 x E Varh E = D / 10 Varh
	214748364.700 Varh	2147483647	0x7FFFFFFF		
	0.000 Varh	0	0x00000000		
Apparent energy (E)	429490176.000 VAh	4294901760	0xFFFF0000	Nominal range	D = 10 x E VAh E = D / 10 VAh
	214748364.700 VAh	2147483647	0x7FFFFFFF		
	0.000 VAh	0	0x00000000		

Scaling factor and calculation

► To get actual current, power and energy values, multiply the module measured values externally in the PLC application or function block by the scaling factor.

Device	Scaling factor
-RC (50 Hz)	(112.5 mV/1 A) x CTR CTR = I Primary/mV Secondary of actual Rogowski coil used
-RC (60 Hz)	(135 mV/1 A) x CTR CTR = I Primary/mV Secondary of actual Rogowski coil used

Example

Module measured rms current:	1 A
Module measured apparent power:	300 VA
Module measured active energy:	7200 Wh
Rogowski coil (50 Hz)	1000 A: 22.5 mV (50 Hz) or 5000 A: 112.5 mV (50 Hz)
Scaling factor (S.F.):	(112.5 mV/1 A) x (1000 A/22.5 mV) = 5000
Rogowski coil (60 Hz)	1000 A: 27 mV (60 Hz) or 5000 A: 135 mV (60 Hz)
Scaling factor (S.F.):	(135 mV/1 A) x (1000 A/27 mV) = 5000

Calculations

Actual rms current =	1 A x S.F. = 5000 A
Actual apparent power =	300 VA x S.F. = 1500000 VA
Actual active energy =	7200 Wh x S.F. = 36000000 Wh

6.65 Power measurement module UR20-3EM-400V-AC-333mV

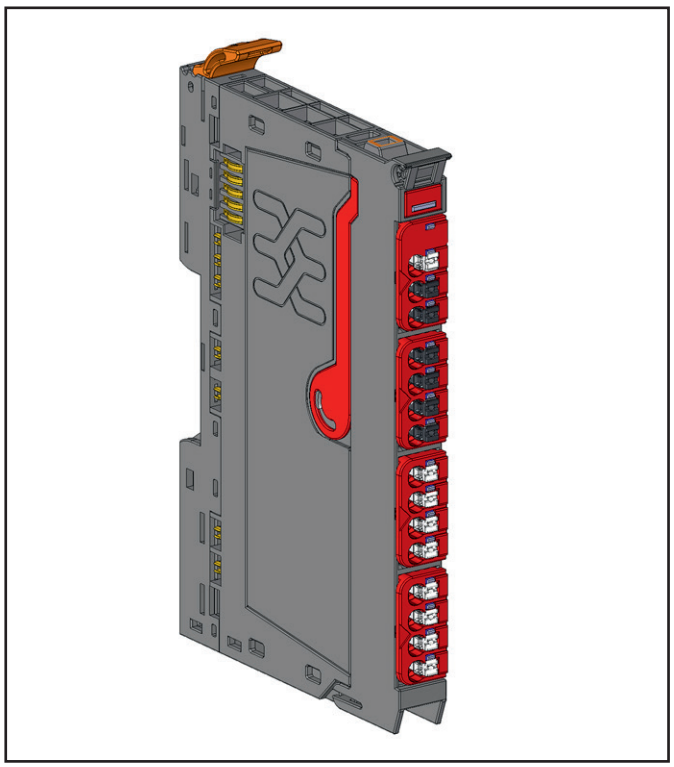

Power measurement module UR20-3EM-400V-AC-333mV (Item No. 2920860000)

The UR20-3EM-400V-AC-333mV power measurement module can measure and process all relevant measurands of one or three phase and neutral current consumers (up to 520 V AC phase-to-phase voltage):
- Current (RMS/average/peak)
- Voltage (RMS/average/peak)
- Reactive, apparent and active power
- Power consumption
- Power factor
- Frequency
- Voltage upper and lower alarm
- Current upper and lower alarm

Current transformers with 333 mV output are required for current measurements with up to 1 A current input. Scaling needs to be done externally by PLC or function blocks if other current conversion ratio are used than the default stated in technical data. Take note current input circuits can be damaged if voltages greater than 2 V with reference to neutral is applied.
The raw measured values are transferred via the connected fieldbus to a superior PLC or a control system.
The module delivers input process data to the fieldbus via six measurement data (16 bit each) and three energy counter data (32 bit each). The data are updated within one millisecond from the module to the coupler. The content of each measurement data and energy counter data can be chosen by first selecting the phase, then the parameter of interest.

Additionaly, several limits can be parameterised. Exceeding the voltage and current upper and lower limit will trigger the process alarms and the status word will be updated. Exceeding other limits will only cause the status word being updated. Latching of status word is possible via parameterisation. A status LED is assigned to channel.

Observe the following instructions when using the module:
- Interruption of the power supply for less than 1 ms has no impact. In the case of longer interruptions, the bus communication will be shut off.
- The current transformer wiring polarity must be observed in order to get correct power polarity and energy measurement.
- Single phase measurement is possible by connecting to phase 1 of the module. In case of split phase, 3 wire system, connect to phase 1 and 2 of the module.
- The module can be used to measure 3 phase power system with various earthing system such as TT, TN-C, TN-C-S, IT etc. Please note that the overvoltage category will be reduced from III to II if any of the nominal phase voltage to earth is greater than 300 V.
- For proper current measurement, current sensor voltage output should not exceed ±0.5 V.

⚠ WARNING

Possible danger to life!

► Always disconnect the power supply to the station before working with the module and secure the station against being switched on again.

⚠ WARNING

Possible danger to life!

The touch-safe protection of this module is only provided with the DIN rail earthed properly.

► Make sure that the DIN rail is connected to PE by earth terminals before commissioning the module.

ATTENTION

The module can be destroyed by a hot swap.

► Make sure that the input contacts are voltage-free before carrying out a hot swap of the electronic unit.



Name	Function
N	Neutral
L1	Line 1
L1	Line 1
L2	Line 2
L2	Line 2
L3	Line 3
L3	Line 3
I1_P	Line 1 current input positive
I1_N	Line 1 current input negative
I2_P	Line 2 current input positive
I2_N	Line 2 current input negative
I3_P	Line 3 current input positive
I3_N	Line 3 current input negative
IN_P	Neutral current input positive
IN_N	Neutral current input negative

Connections UR20-3EM-400V-AC-333mV

Application with current transformer

⚠ WARNING

Hazardous voltage on open current path!

- ► Never use a transformer in no-load operation.
- ► Always connect the transformer with the power measurement module **before** you start to operate the transformer.
- ► Never unlock the connector frame of the module during opreration with a transformer.

Application examples

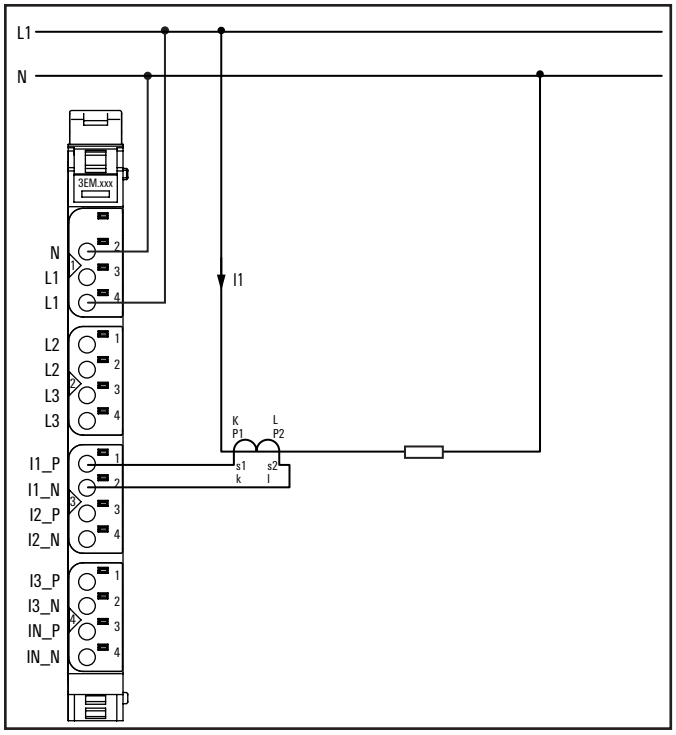

UR20-3EM-400V-AC-333mV application: 1-phase connection

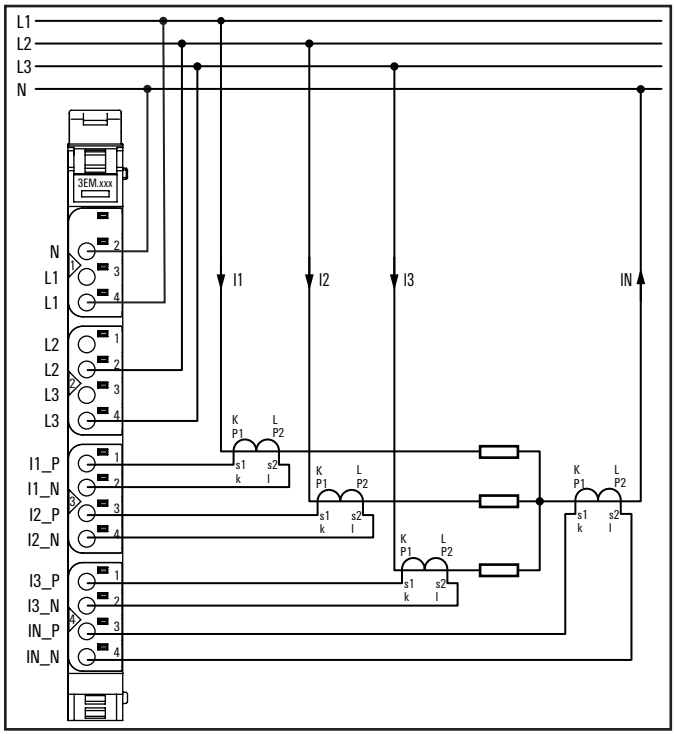

UR20-3EM-400V-AC-333mV application: 3-phase 4-wire, 3 voltage inputs

The meter topology (MT) MT0 can be used for a 3-phase 4-wire system where all 3 phase voltages and currents are measured. Measurement of neutral current is optional. If a neutral wire is not available in the application, the measurement is still possible as the module builds a virtual zero point with the 3 phase voltages. However, measurement errors increases with any unbalancing of the 3 phase systems.

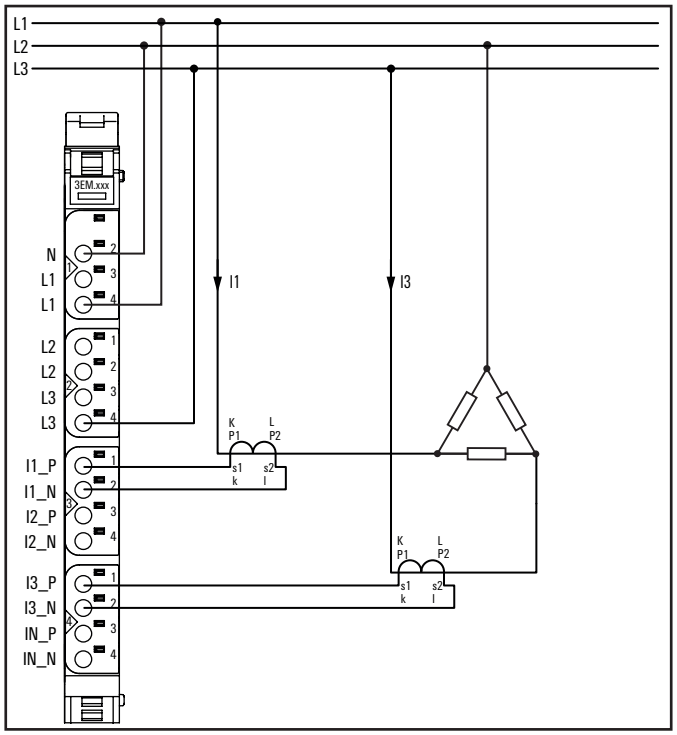

UR20-3EM-400V-AC-333mV application: 3-phase 3-wire, delta connection

The MT1 topology can be used for a 3-phase 3-wire system where only 2 line voltages and currents are measured (2 Wattmeter method). It can also be used for a 3-phase 4-wire system when there is no neutral current flowing. For this topology, L2 must be connected as neutral on the module. V_{L2} is computed as line voltage $V_{L1 - L3}$.

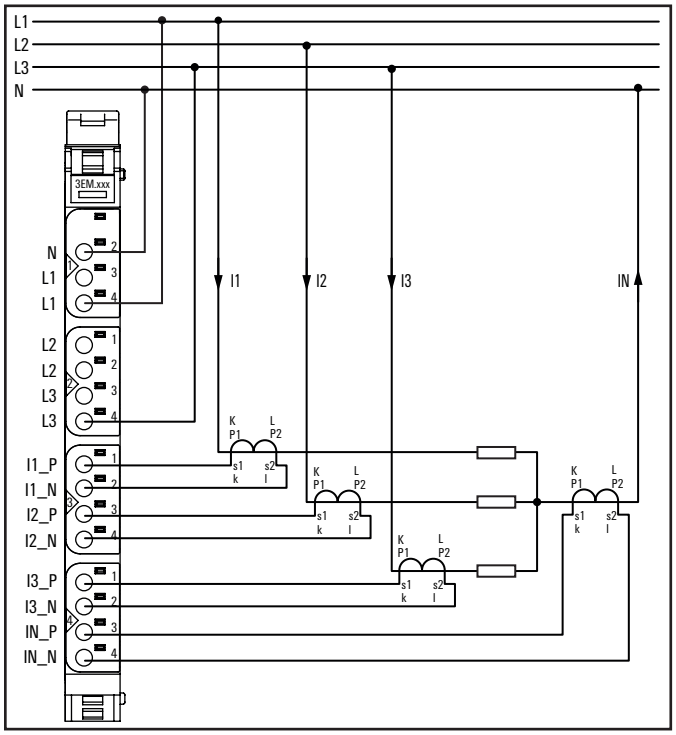

UR20-3EM-400V-AC-333mV application: 3-phase-4-wire, 2 voltage inputs

The MT2 topology can be used for 3-phase 4-wire system where only 2 phase voltages and 3 currents are measured. Measurement of neutral current is optional. V_{L2} is computed as $-V_{L1}-V_{L3}$ based on balance system assumptions.

Measurement options depending on the meter topology (MT)

Measured value	MT0 [7]	MT1	MT2
RMS Voltage	x	x [1), 2)]	x [6)]
RMS Current	x	x [1)]	x
Peak Voltage	x	x [1), 2)]	x [6)]
Peak Current	x	x [1)]	x
Line Frequency	x	x [1), 2)]	x
Harmonic X RMS Voltage	x	x [1), 2)]	x [6)]
Harmonic Y RMS Voltage	x	x [1), 2)]	x [6)]
Harmonic Z RMS Voltage	x	x [1), 2)]	x [6)]
Harmonic X RMS Current	x	x [1)]	x
Harmonic Y RMS Current	x	x [1)]	x
Harmonic Z RMS Current	x	x [1)]	x
Power Factor	x	–	x
Total Harmonic Distortion Voltage	x	x [1), 2)]	x
Total Harmonic Distortion Current	x	x [1)]	x
RMS Voltage Average -3ph	x	–	x
RMS Current Average -3ph	x	–	x
RMS Current (Neutral)	x	–	x
Total Power Factor -3ph	x	x [3), 4)]	x
Active Power	x	–	x
Reactive Power	x [5)]	–	x [5)]
Apparent Power	x	–	x
Fundamental Active Power	x	–	x
Fundamental Reactive Power	x	–	x
Fundamental Apparent Power	x	–	x
Harmonic X Active Power	x	–	x
Harmonic Y Active Power	x	–	x
Harmonic Z Active Power	x	–	x
Harmonic X Reactive Power	x	–	x
Harmonic Y Reactive Power	x	–	x
Harmonic Z Reactive Power	x	–	x
Harmonic X Apparent Power	x	–	x
Harmonic Y Apparent Power	x	–	x
Harmonic Z Apparent Power	x	–	x
Active Power -3ph	x	x [3)]	x
Reactive Power -3ph	x [5)]	x [3), 4)]	x [5)]
Apparent Power -3ph	x	x [3), 4)]	x
Fundamental Active Power -3ph	x	x [3)]	x
Fundamental Reactive Power -3ph	x	x [3), 4)]	x
Fundamental Apparent Power -3ph	x	x [3), 4)]	x
Fundamental RMS Voltage	x	x [1), 2)]	x [6)]
Fundamental RMS Current	x	x [1)]	x

Measurement options depending on the meter topology (MT)

Energy Counter	MT0 [7]	MT1	MT2
Active Energy Received	x	–	x
Active Energy Delivered	x	–	x
Apparent Energy	x	–	x
Fundamental Reactive Leading Energy	x	–	x
Fundamental Reactive Lagging Energy	x	–	x
Fundamental Active Energy Received	x	–	x
Fundamental Active Energy Delivered	x	–	x
Active Energy Received -3ph	x [8)]	x [3)]	x [8)]
Active Energy Delivered -3ph	x [8)]	x [3)]	x [8)]
Fundamental Reactive Leading Energy -3ph	x [8)]	x [3), 4)]	x [8)]
Fundamental Reactive Lagging Energy -3ph	x [8)]	x [3), 4)]	x [8)]

x Measurement available
– Measurement will return invalid value

1) Line measurement instead of phase
2) When phase selected is L1, measurement is for L1-L2
   When phase selected is L2, measurement is for L1-L3
   When phase selected is L3, measurement is for L3-L2
3) Calculated using the 2-wattmeter method assuming that the sum of 3 line currents is 0
4) Valid only for 3-phase balanced system and load
5) Calculated using power triangle and valid only if harmonics is not present. If harmonics is present, you can read the fundamental reactive power instead for a more representative value
6) L2 voltage is calculated assuming that the sum of 3 phase voltages is 0
7) If a neutral wire is not available in the application, the measurement is still possible as the module builds a virtual zero point with the 3 phase voltages. However, measurement errors increases with any unbalancing of the 3-phase systems.
8) Take note that the total energy counter will oveflow much earlier than the individual phase energy counter as they are represented by the same number of bits

MT0: 3-phase 4-wire, 3 voltage inputs
MT1: 3-phase 3-wire, delta
MT2: 3-phase 4-wire, 2 voltage inputs



	Module status LED Green: Communication over the system bus Red: Error
1.2	
1.3	Yellow: Voltage >33 V_{rms} at L1 Yellow flashing: Running light with 2.1 and 2.3 indicates phase sequence
1.4	Red: Overvoltage limit exceeded at L1
2.1	Yellow: Voltage >33 V_{rms} at L2 Yellow flashing: Running light with 1.3 and 2.3 indicates phase sequence
2.2	Red: Overvoltage limit exceeded at L2
2.3	Yellow: Voltage >33 V_{rms} at L3 Yellow flashing: Running light with 1.3 and 2.1 indicates phase sequence
2.4	Red: Overvoltage limit exceeded at L3
3.1	Red: Overcurrent limit exceeded at L1
3.2	
3.3	Red: Overcurrent limit exceeded at L2
3.4	
4.1	Red: Overcurrent limit exceeded at L3
4.2	
4.3	Red: Overcurrent limit exceeded at N
4.4	
	Overvoltage or overcurrent limit is defined as 10 % of the nominal input voltage or 5 % of the nominal input current. Nominal input current 1 A Nominal input voltage 300 V_{eff} AC (Star) or 520 V_{eff} AC (Delta)

The yellow LEDs for 1.3, 2.1 and 2.3 are not displayed correctly in the Webserver.

LED indicators UR20-3EM-400V-AC-333mV, troubleshooting see Chapter 12

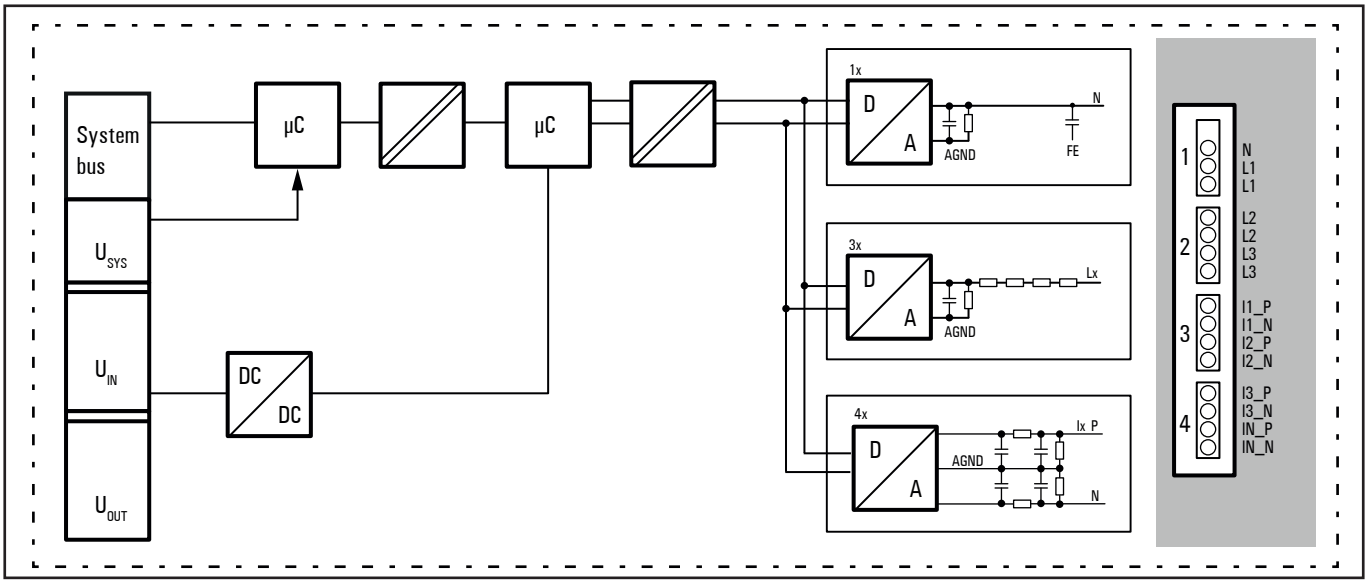

Block diagram UR20-3EM-400V-AC-333mV

Technical data UR20-3EM-400V-AC-333mV (Item No. 2920860000)

System data	
Data	Process, parameter and diagnostic data depend on the coupler used, see coupler description
Interface	u-remote system bus
System bus transfer rate	48 Mbps / 192 Mbps
Connections	
Number	3 Phases, 1 Neutral, 4 pairs of current transformer conductors
Harmonics analysis	up to 43rd
Measuring methods	Converter/ Current transformer / Voltage transformer
Overvoltage category	III (acc. to IEC 61010-1) II (acc. to IEC 61010-1) for systems with nominal voltage to earth > 300 V
Frequency of the supply system	45 ... 65 Hz
Input impedance voltage	4.0022 MΩ
Isolation	Reinforced isolation to system and power rail and basic isolation to functional earth
Measuring accuracy	0.25 % in relation to final value (U / I), 0.5 % for the calculated values (the final value refers to the converted value when process data returns 27648 in decimal) 0.75 % for Harmonics
Temperature coefficient	U / I and calculated values 75 ppm/K
Input impedance current (differential)	40 kΩ
Input current cable	shielded (grounded at both ends)
Rated voltage	300 V_{eff} AC (L–N), 520 V_{eff} AC (L–L) according to table I.1 of IEC 61010-1:2010/AMD1:2016/COR1:2019
Rated input current	333 mV_{eff} / 1 A_{eff}
Resolution (per measurement)	16 Bit (internally 24 Bit) 32 Bit for energy counter
Sampling rate of voltage and current measurement	Sigma Delta ADC with 1.024 MHz (bandwidth of interest from 40 Hz to 3.3 kHz)
Data storage	Energy counters saved at 15min interval
Module diagnosis	yes
Individual channel diagnosis	yes
Supply	
Supply voltage	24 V DC +20%/-15%, according to IEC 61131-2 24 V DC +30%/-25%, according to DNV
Current consumption from system current path I_{SYS}	8 mA
Current consumption from input current path I_{IN}	< 35 mA
General data	
Weight (operational status)	88 g
ATEX/UKEX conform	no
For additional general data, see Section 3.4	

Overview of the editable parameters UR20-3EM-400V-AC-333mV (Order according to web server)

Name	Options[1)]	Description / data width	Default
Meter topology	3P4W, 3 voltage inputs (0) / 3P3W delta (1) / 3P4W, 2 voltage inputs (2)	2 Bit	3P4W, 3 voltage inputs
Line frequency	50 Hz (0) / 60 Hz (1)	1 Bit	50 Hz
Harmonic X	1 ... 43	1 = fundamental	3
Harmonic Y	1 ... 43	1 = fundamental	5
Harmonic Z	1 ... 43	1 = fundamental	7
Voltage low alarm	disabled (0) / enabled (1)	1 Bit	disabled
Voltage low limit	0 ... 520 V (0 ... 27648)	Positive values only (16 Bit)	0
Voltage high alarm	disabled (0) / enabled (1)	1 Bit	disabled
Voltage high limit	0 ... 520 V (0 ... 27648)	Positive values only (16 Bit)	27648
Voltage sag alarm	disabled (0) / enabled (1)	1 Bit	disabled
Voltage sag limit	0 ... 520 V (0 ... 27648)		0
Current low alarm	disabled (0) / enabled (1)	1 Bit	disabled
Current low limit	0 ... 1 A (0 ... 27648)	Positive values only (16 Bit)	0
Current high alarm	disabled (0) / enabled (1)	1 Bit	disabled
Current high limit	0 ... 1 A (0 ... 27648)	Positive values only (16 Bit)	27648
Current imbalance alarm	disabled (0) / enabled (1)	1 Bit	disabled
Current imbalance limit	0 ... 100% (0 ... 16383)	Positive values only (16 Bit)	16383
Neutral current mismatch alarm	disabled (0) / enabled (1)	1 Bit	disabled
Neutral current mismatch limit	0 ... 1 A (0 ... 27648)		27648
Frequency low alarm	disabled (0) / enabled (1)	1 Bit	disabled
Frequency low limit	45 ... 65 Hz (5760 ... 8320)	Positive values only (16 Bit)	5760
Frequency high alarm	disabled (0) / enabled (1)	1 Bit	disabled
Frequency high limit	45 ... 65 Hz (5760 ... 8320)	Positive values only (16 Bit)	8320
Power factor alarm	disabled (0) / enabled (1)	1 Bit	disabled
Power factor low limit	0 ... 1 (0 ... 16383)	Positive values only (16 Bit)	0
Status word latch	disabled (0) / enabled (1)	1 Bit	disabled
Diagnostic alarm	disabled (0) / enabled (1)	1 Bit	disabled
Phase shifting L1	−6.732° ... 1.107° (50 Hz) (-383 ... 63) −8.079° ... 1.329° (60 Hz) (-383 ... 63)	16 Bit Enter phase shift here to correct the phase error introduced by CT. Negative values indicate current lead voltage, and vice versa.	0
Phase shifting L2		see Phase shifting L1	
Phase shifting L3		see Phase shifting L1	
Phase 0	L1 (0) / L2 (1) / L3 (2)		L1
Measured value 0	disabled (0)		disabled
	RMS voltage (1)		
	RMS current (2)		
	Peak voltage (3)		
	Peak current (4)		
	Line frequency (5)		

1) Values in brackets for Modbus-TCP (firmware version 02.00.00 and higher), CANopen, EtherCAT and EtherNet/IP via module parameter class

Overview of the editable parameters UR20-3EM-400V-AC-333mV (Order according to web server)

Name	Options[1)]	Description / data width	Default
	Harmonic X RMS voltage (6)		
	Harmonic Y RMS voltage (7)		
	Harmonic Z RMS voltage (8)		
	Harmonic X RMS current (9)		
	Harmonic Y RMS current (10)		
	Harmonic Z RMS current (11)		
	Power factor (12)	Absolute value only	
	THD voltage (13)		
	THD current (14)		
	RMS voltage average -3ph (15)		
	RMS current average -3ph (16)		
	RMS current neutral (17)		
	Total power factor -3ph (18)	Total Active Power/ Total Apparent Power (Absolute value only)	
	Active power (19)		
	Reactive power (20)	This is only accurate if no harmonics is present. With harmonics present, you can read fundamental reactive power instead for a more representative value. If the line frequency is parametrised differently than the system to be measured, the reactive power cannot be calculated correctly and incorrect values will be displayed.	
	Apparent power (21)		
	Fundamental active power (22)		
	Fundamental reactive power (23)		
	Fundamental apparent power (24)		
	Harmonic X active power (25)		
	Harmonic Y active power (26)		
	Harmonic Z active power (27)		
	Harmonic X reactive power (28)		
	Harmonic Y reactive power (29)		
	Harmonic Z reactive power (30)		
	Harmonic X apparent power (31)		
	Harmonic Y apparent power (32)		
	Harmonic Z apparent power (33)		
	Active power -3ph (34)		
	Reactive power -3ph (35)		
	Apparent power -3ph (36)		
	Fundamental active power -3ph (37)		
	Fundamental reactive power -3ph (38)		
	Fundamental apparent power -3ph (39)		
	Fundamental RMS voltage (40)		
	Fundamental RMS current (41)		

1) Values in brackets for Modbus-TCP (firmware version 02.00.00 and higher), CANopen, EtherCAT and EtherNet/IP via module parameter class

Overview of the editable parameters UR20-3EM-400V-AC-333mV (Order according to web server)

Name	Options[1)]	Description / data width	Default
Phase 1		see Phase 0	
Measured value 1		see Measured value 0	
Phase 2		see Phase 0	
Measured value 2		see Measured value 0	
Phase 3		see Phase 0	
Measured value 3		see Measured value 0	
Phase 4		see Phase 0	
Measured value 4		see Measured value 0	
Phase 5		see Phase 0	
Measured value 5		see Measured value 0	
Phase 6	L1 (0) / L2 (1) / L3 (2)		L1
Energy counter 0	disabled (0)		disabled
	Active energy received (1)		
	Active energy delivered (2)		
	Apparent energy (3)		
	Fundamental reactive leading energy (4)		
	Fundamental reactive lagging energy (5)		
	Fundamental active energy received (6)		
	Fundamental active energy delivered (7)		
	Active energy received -3ph (8)		
	Active energy delivered -3ph(9)		
	Fundamental reactive leading. energy -3ph (10)		
	Fundamental reactive lagging energy -3ph (11)		
Phase 7		see Phase 6	
Energy counter 1		see Energy counter 0	
Phase 8		see Phase 6	
Energy counter 2		see Energy counter 0	

1) Values in brackets for Modbus-TCP (firmware version 02.00.00 and higher), CANopen, EtherCAT and EtherNet/IP via module parameter class

Please see more details for conversion in the table "Measuring ranges" on page 653.

Calculation of reactive power

$$Q = \sqrt{S^2 - P^2}$$

Calculation of current imbalance

$$\text{Current imbalance} = \frac{\max(|I_{RMS}L1 - I_{RMS}Average|\ ,\ |I_{RMS}L2 - I_{RMS}Average|\ ,\ |I_{RMS}L3 - I_{RMS}Average|)}{I_{RMS}Average}$$

Diagnostic data UR20-3EM-400V-AC-333mV

Name	Byte	Bit	Description	Default
Error indicator	0	0	Module error	0
		1	Internal error	0
		2	External error	0
		3	Channel error	0
		4	Error	0
		5	Power supply fault	0
		6	Reserved	0
		7	Parameter error	0
Module type	1	0	Module Type	0x05
		1		
		2		
		3		
		4	Channel information available	1
		5	Reserved	0
		6	Reserved	0
		7	Reserved	0
Error byte 2	2	0 ... 7	Reserved	0
Error byte 3	3	0 ... 2	Reserved	0
		3	Internal diagnostic FIFO full	0
		4	Communication fault	0
		5	Reserved	0
		6	Process alarm lost	0
		7	Reserved	0
Channel type	4	0	Channel type	0x64
		1		
		2		
		3		
		4		
		5		
		6		
		7	Reserved	0
Diagnostic bits per channel	5		Number of diagnostic bit per channel	16
Number of channels	6			1
Channel error	7	0	Error at channel 0	0
		1 ... 7	Reserved	0
	8 ... 10	0 ... 7	Reserved	0

Diagnostic data UR20-3EM-400V-AC-333mV

Name	Byte	Bit	Description	Default
Channel 0 error	11	0	Voltage upper limit exceeded L1	0
		1	Voltage upper limit exceeded L2	0
		2	Voltage upper limit exceeded L3	0
		3	Current upper limit exceeded L1	0
		4	Current upper limit exceeded L2	0
		5	Reserved	0
		6	Current upper limit exceeded L3	0
		7	Current upper limit exceeded N	0
	12	0 ... 7	Reserved	0
Channel 1 error ... Channel 15 error	13 ... 42	0 ... 7	Reserved	0
Time stamp	43-46		time stamp [µs] (32bit)	

Process data inputs UR20-3EM-400V-AC-333mV

Channel	Byte	Format	Description
0	IB0	int16	Measured value 0
	IB1		
	IB2	int16	Measured value 1
	IB3		
	IB4	int16	Measured value 2
	IB5		
	IB6	int16	Measured value 3
	IB7		
	IB8	int16	Measured value 4
	IB9		
	IB10	int16	Measured value 5
	IB11		
	IB12	uint32	Energy counter 0
	IB13		
	IB14		
	IB15		
	IB16	uint32	Energy counter 1
	IB17		
	IB18		
	IB19		
	IB20	uint32	Energy counter 2
	IB21		
	IB22		
	IB23		
	IB24	Word	Status word
	IB25		
	IB26	uint32	Mail box data
	IB27		
	IB28		
	IB29		
	IB30	Byte	Status word address
	IB31	Byte	Mail box address

Process data outputs UR20-3EM-400V-AC-333mV

Channel	Byte	Bit	Format	Description	Value
0	QB0	QX0.0	Bit	Reset all energy counters	0..1
		QX0.1	Bit	Reserved	
		QX0.2	Bit	Reserved	
		QX0.3	Bit	Clear status latch	0..1
		QX0.4	Bit	Reserved	
		QX0.5	Bit	Reserved	
		QX0.6	Bit	Reserved	
		QX0.7	Bit	Save energy counter[1)]	0..1
	QB1		Byte	Key to counter reset	0xAF
	QB2		Byte	Status word address	0..3
	QB3		Byte	Mailbox address	0..128
	QB4 ... QB7			Reserved	

1) This bit is only applicable for rising edges to avoid overwriting of the EEPROM. Excessive saving of the energy counter could reduce the service life of the memory.

Process alarm UR20-3EM-400V-AC-333mV

Name	Byte	Bit	Function
Alarm	0	0	Reserved
		1	Voltage upper limit exceeded at L1
		2	Voltage upper limit exceeded at L2
		3	Voltage upper limit exceeded at L3
		4	Current upper limit exceeded at L1
		5	Current upper limit exceeded at L2
		6	Current upper limit exceeded at L3
		7	Reserved
Alarm	1	0	Reserved
		1	Voltage lower limit underrun at L1
		2	Voltage lower limit underrun at L2
		3	Voltage lower limit underrun at L3
		4	Current lower limit underrun at L1
		5	Current lower limit underrun at L2
		6	Current lower limit underrun at L3
		7	Reserved
Time stamp	2 ... 3		The two lowest bytes of the internal 32-bit timer

Mailbox

The process data inputs are limited and not sufficient to map the huge amount of data available. Therefore, a mailbox system is implemented. Using a mailbox address enables to read back data that are not pre-mapped to the process data inputs.

► In the process data output byte, set the mailbox address for the data of interest.

Mailbox data returned will be in uint32 data format and conversion needs to be done based on the mailbox address and conversion formula provided in this manual.

Mailbox address

Address	Mailbox data
0	Disabled
1	RMS voltage L1
2	RMS voltage L2
3	RMS voltage L3
4	RMS current L1
5	RMS current L2
6	RMS current L3
7	Peak voltage L1
8	Peak voltage L2
9	Peak voltage L3
10	Peak current L1
11	Peak current L2
12	Peak current L3
13	Line frequency L1
14	Line frequency L2
15	Line frequency L3
16	Harmonic X RMS voltage L1
17	Harmonic X RMS voltage L2
18	Harmonic X RMS voltage L3
19	Harmonic Y RMS voltage L1
20	Harmonic Y RMS voltage L2
21	Harmonic Y RMS voltage L3
22	Harmonic Z RMS voltage L1
23	Harmonic Z RMS voltage L2
24	Harmonic Z RMS voltage L3
25	Harmonic X RMS current L1
26	Harmonic X RMS current L2
27	Harmonic X RMS current L3
28	Harmonic Y RMS current L1
29	Harmonic Y RMS current L2
30	Harmonic Y RMS current L3
31	Harmonic Z RMS current L1
32	Harmonic Z RMS current L2
33	Harmonic Z RMS current L3
34	Power factor L1
35	Power factor L2
36	Power factor L3
37	THD voltage L1
38	THD voltage L2

Mailbox address

Address	Mailbox data
39	THD voltage L3
40	THD current L1
41	THD current L2
42	THD current L3
43	RMS voltage average -3ph
44	RMS current average -3ph
45	RMS current neutral
46	Total power factor -3ph
47	Active power L1
48	Active power L2
49	Active power L3
50	Reactive power L1
51	Reactive power L2
52	Reactive power L3
53	Apparent power L1
54	Apparent power L2
55	Apparent power L3
56	Fundamental active power L1
57	Fundamental active power L2
58	Fundamental active power L3
59	Fundamental reactive power L1
60	Fundamental reactive power L2
61	Fundamental reactive power L3
62	Fundamental apparent power L1
63	Fundamental apparent power L2
64	Fundamental apparent power L3
65	Harmonic X active power L1
66	Harmonic X active power L2
67	Harmonic X active power L3
68	Harmonic Y active power L1
69	Harmonic Y active power L2
70	Harmonic Y active power L3
71	Harmonic Z active power L1
72	Harmonic Z active power L2
73	Harmonic Z active power L3
74	Harmonic X reactive power L1
75	Harmonic X reactive power L2
76	Harmonic X reactive power L3
77	Harmonic Y reactive power L1
78	Harmonic Y reactive power L2
79	Harmonic Y reactive power L3
80	Harmonic Z reactive power L1
81	Harmonic Z reactive power L2
82	Harmonic Z reactive power L3
83	Harmonic X apparent power L1
84	Harmonic X apparent power L2
85	Harmonic X apparent power L3
86	Harmonic Y apparent power L1
87	Harmonic Y apparent power L2
88	Harmonic Y apparent power L3
89	Harmonic Z apparent power L1

Mailbox address

Address	Mailbox data
90	Harmonic Z apparent power L2
91	Harmonic Z apparent power L3
92	Active power -3ph
93	Reactive power -3ph
94	Apparent power -3ph
95	Fundamental active power -3ph
96	Fundamental reactive power -3ph
97	Fundamental apparent power -3ph
98	Active energy received L1
99	Active energy received L2
100	Active energy received L3
101	Active energy delivered L1
102	Active energy delivered L2
103	Active energy delivered L3
104	Apparent energy L1
105	Apparent energy L2
106	Apparent energy L3
107	Fundamental reactive leading energy L1
108	Fundamental reactive leading energy L2
109	Fundamental reactive leading energy L3
110	Fundamental reactive lagging energy L1
111	Fundamental reactive lagging energy L2
112	Fundamental reactive lagging energy L3
113	Fundamental active energy received L1
114	Fundamental active energy received L2
115	Fundamental active energy received L3
116	Fundamental active energy delivered L1
117	Fundamental active energy delivered L2
118	Fundamental active energy delivered L3
119	Active energy received -3ph
120	Active energy delivered -3ph
121	Fundamental reactive leading energy -3ph
122	Fundamental reactive lagging energy -3ph
123	Fundamental RMS voltage L1
124	Fundamental RMS voltage L2
125	Fundamental RMS voltage L3
126	Fundamental RMS current L1
127	Fundamental RMS current L2
128	Fundamental RMS current L3

Status word 0

Byte	Bit	Function
0	0	Phase sequence L1-L2-L3 detected
	1	Phase sequence L1-L3-L2 detected
	2	Voltage detected at L1
	3	Voltage detected at L2
	4	Voltage detected at L3
	5	Reserved
	6	Reserved
	7	Reserved
1	0	Status Error at L1
	1	Status Error at L2
	2	Status Error at L3
	3	Current imbalance detected
	4	Neutral current mismatch detected
	5	Reserved
	6	Reserved
	7	Reserved

Status word 1 for L1, 2 for L2, 3 for L3

Byte	Bit	Function
0	0	Voltage lower limit underrun
	1	Voltage upper limit exceeded
	2	Voltage sag
	3	Current lower limit underrun
	4	Current upper limit exceeded
	5	Reserved
	6	Reserved
	7	Reserved
1	0	Frequency lower limit underrun
	1	Frequency upper limit exceeded
	2	Power factor lower limit underrun
	3	Reserved
	4	Reserved
	5	Reserved
	6	Reserved
	7	Reserved

A status error will be updated based on actual event happening, no latching default.
To enable status latching, use the **Status word latch** parameter, if needed.
To clear the latched status, use the **Clear Status Latch** bit in the output process mapping. In the process data output byte, set the status word address 0, 1, 2 or 3 to read back the respective status word.

Measuring ranges and conversions UR20-3EM-400V-AC-333mV, scaling factor see following section

Measuring range	Value	Decimal (D)	Hexadecimal	Range	Conversion
RMS voltage (U) RMS voltage average -3ph (U) Harmonic RMS voltage (U) Voltage lower/upper limit (U)	611.463 V_{RMS}	32511	0x7EFF	Overloading	
	520 V_{RMS}	27648	0x6C00	Nominal range	D = 27648 x U / 520 V_{RMS} U = D x 520 V_{RMS} / 27648
	260 V_{RMS}	13824	0x3600		
	0 V_{RMS}	0	0x0000		
Peak voltage (U) Voltage sag limit (U)	864.279 V	32511	0x7EFF	Overloading	
	735 V	27648	0x6C00	Nominal range	D = 27648 x U / 735 V U = D x 735 V / 27648
	367.5 V	13824	0x3600		
	0 V	0	0x0000		
RMS current (I) RMS current average -3ph (I) Harmonic RMS current (I) Current lower/upper limit (I)	1.176 A_{RMS}	32511	0x7EFF	Overloading	
	1 A_{RMS}	27648	0x6C00	Nominal range	D = 27648 x I / 1 A_{RMS} I = D x 1 A_{RMS} / 27648
	0.5 A_{RMS}	13824	0x3600		
	0 A_{RMS}	0	0x0000		
Peak current (I)	1.663 A	32511	0x7EFF	Overloading	
	1.414 A	27648	0x6C00	Nominal range	D = 27648 x I / 1.414 A I = D x 1.414 A/ 27648
	0.707 A	13824	0x3600		
	0 A	0	0x0000		
Neutral current mismatch limit (I)	1 A	27648	0x6C00	Nominal range	D = 27648 x I / 1 A I = D x 1 A/ 27648
	0.5 A	13824	0x3600		
	0 A	0	0x0000		
Line frequency (f) Frequency lower limit (f) Frequency upper limit (f)	65 Hz	8320	0x2080	Nominal range	D = 128 x f [Hz] f = D / 128
	60 Hz	7680	0x1E00		
	50 Hz	6400	0x1900		
	45 Hz	5760	0x1680		
Current imbalance limit (CI) Total Harmonic Distortion (THD)	100.00 %	16383	0x3FFF	Nominal range	D = 16383 x CI / 100 CI = D x 100 / 16383 D = 16383 x THD / 100 THD = D x 100 / 16383
	75.00 %	12287	0x2FFF		
	50.00 %	8191	0x1FFF		
	0.00 %	0	0x0000		
Power factor (PF) Total power factor -3ph (PF)	1	16383	0x3FFF	Nominal range	D = 16383 x PF PF = D / 16383
	0.750	12287	0x2FFF		
	0.500	8191	0x1FFF		
	0.000	0	0x0000		

Measuring ranges and conversions UR20-3EM-400V-AC-333mV, scaling factor see following section

Measuring range	Value	Decimal (D)	Hexadecimal	Range	Conversion
Active power (P) Fundamental active power (P) Harmonic active power (P)	611.463 W	32511	0x7EFF	Overloading	
	520 W	27648	0x6C00	Nominal range	D = 27648 x P / 520 W P = D x 520 W / 27648
	260 W	13824	0x3600		
	0 W	0	0x0000		
	-260 W	-13824	0xCA00		
	-520 W	-27648	0x9400		
	-611.463 W	-32511	0x8101	Underloading	
Active power -3ph (P) Fundamental active power -3ph (P)	1834.388 W	32511	0x7EFF	Overloading	
	1560 W	27648	0x6C00	Nominal range	D = 27648 x P / 1560 W P = D x 1560 W / 27648
	780 W	13824	0x3600		
	0 W	0	0x0000		
	-780 W	-13824	0xCA00		
	-1560 W	-27648	0x9400		
	-1834.388 W	-32511	0x8101	Underloading	
Reactive power (Q) Fundamental reactive power (Q) Harmonic reactive power (Q)	611.463 var	32511	0x7EFF	Overloading	
	520 var	27648	0x6C00	Nominal range	D = 27648 x Q / 520 var Q = D x 520 var / 27648
	260 var	13824	0x3600		
	0 var	0	0x0000		
	-260 var	-13824	0xCA00		
	-520 var	-27648	0x9400		
	-611.463 var	-32511	0x8101	Underloading	
Reactive power -3ph (Q) Fundamental reactive power -3ph (Q)	1834.388 var	32511	0x7EFF	Overloading	
	1560 var	27648	0x6C00	Nominal range	D = 27648 x Q / 1560 var Q = D x 1560 var / 27648
	780 var	13824	0x3600		
	0 var	0	0x0000		
	-780 var	-13824	0xCA00		
	-1560 var	-27648	0x9400		
	-1834.388 var	-32511	0x8101	Underloading	
Apparent power (S) Fundamental apparent power (S) Harmonic apparent power (S)	611.463 VA	32511	0x7EFF	Overloading	
	520 VA	27648	0x6C00	Nominal range	D = 27648 x S / 520 VA S = D x 520 VA / 27648
	260 VA	13824	0x3600		
	0 VA	0	0x0000		

Measuring ranges and conversions UR20-3EM-400V-AC-333mV, scaling factor see following section

Measuring range	Value	Decimal (D)	Hexadecimal	Range	Conversion
Apparent power -3ph (S) Fundamental apparent power -3ph (S)	1834.388 VA	32511	0x7EFF	Overloading	
	1560 VA	27648	0x6C00	Nominal range	D = 27648 x S / 1560 VA S = D x 1560 VA / 27648
	780 VA	13824	0x3600		
	0 VA	0	0x0000		
Active energy (E) Fundamental active energy (E) Active energy -3ph (E)	429490176.000 Wh	4294901760	0xFFFF0000	Nominal range	D = 10 x E Wh E = D / 10 Wh
	214748364.700 Wh	2147483647	0x7FFFFFFF		
	0.000 Wh	0	0x00000000		
Fundamental reactive leading energy (E) Fundamental reactive lagging energy (E) Fundamental reactive leading energy -3ph (E) Fundamental reactive lagging energy -3ph (E)	429490176.000 Varh	4294901760	0xFFFF0000	Nominal range	D = 10 x E Varh E = D / 10 Varh
	214748364.700 Varh	2147483647	0x7FFFFFFF		
	0.000 Varh	0	0x00000000		
Apparent energy (E)	429490176.000 VAh	4294901760	0xFFFF0000	Nominal range	D = 10 x E VAh E = D / 10 VAh
	214748364.700 VAh	2147483647	0x7FFFFFFF		
	0.000 VAh	0	0x00000000		

Scaling factor and calculation

► To get actual current, power and energy values, multiply the module measured values externally in the PLC application or function block by the scaling factor.

Device	Scaling factor
-333 mV	(333 mV/ 1 A) x CTR CTR = I Primary/ mV Secondary of actual 333 mV current transformer used

Example

Module measured rms current:	1 A
Module measured apparent power:	300 VA
Module measured active energy:	7200 Wh
Current sensor:	1000A:333mV
Scaling factor (S.F.):	(333 mV/ 1 A) x (1000 A / 333 mV) = 1000

Calculations

Actual rms current =	1 A x S.F. = 1000 A
Actual apparent power =	300 VA x S.F. = 300000 VA
Actual active energy =	7200 Wh x S.F. = 7200000 Wh

6.66 Analogue output module UR20-2AO-UI-16

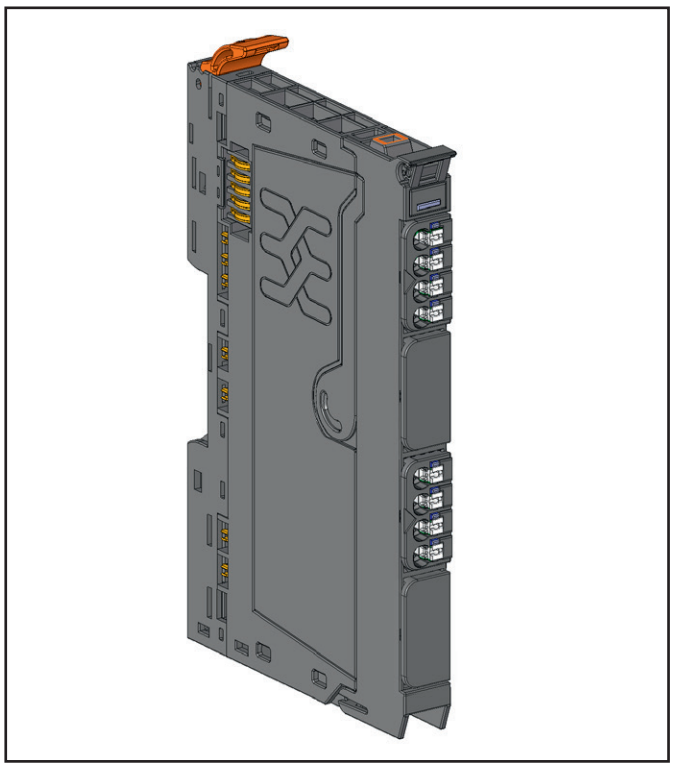

Analogue output module UR20-2AO-UI-16 (Item No. 2705630000)

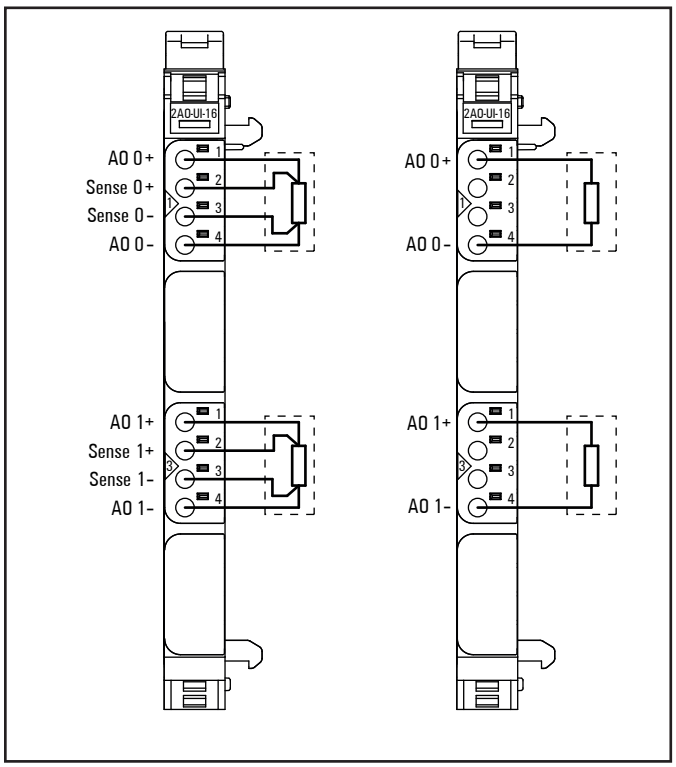

Connection diagram UR20-2AO-UI-16

The analogue output module UR20-2AO-UI-16 can control up to 2 analogue actuators with ±10 V, ±5 V, 0 ... 10 V, 0 ... 5 V, 2 ... 10 V, 1 ... 5 V, 0 ... 20 mA or 4 ... 20 mA. The resolution is 16 bit per channel. An actuator can be connected to each connector in a 2-wire or 4-wire connection, the internal switching is carried out automatically. The output range is defined using parameterisation. A status LED is assigned to each channel. The outputs are supplied with power from the output current path I_{OUT}. The outputs are decoupled from the system bus I_{SYS}, but there is no potential isolation to the output current path I_{OUT}.

ATTENTION

The module can be destroyed!

Connections AO 0– and AO 1– are connected to the supply potential (GND OUT).

► Realise the wiring in such a way that no compensation current will flow through the module.

Please regard the following notes when wiring, to avoid perturbation effects and to ensure proper function of the module.

► Use shielded analogue lines only and earth them on both ends. In case of potential differences between the ends, you should earth one end only.

► Always use shielded twisted pair lines when connecting the actuators.

► Shielding: Apply the cable schield to the functional earth directly on entering the cabinet; on applications without cabinet apply it to a shield bus.

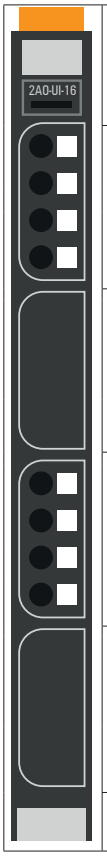

	Module status LED Green: Communication over the system bus Red: Error
1.1	Red: Channel 0 at voltage output: overload or short circuit, at current output: shunt resistance too high or line break detected
3.1	Red: Channel 1 at voltage output: overload or short circuit, at current output: shunt resistance too high or line break detected

LED indicators UR20-2AO-UI-16, troubleshooting see Chapter 12

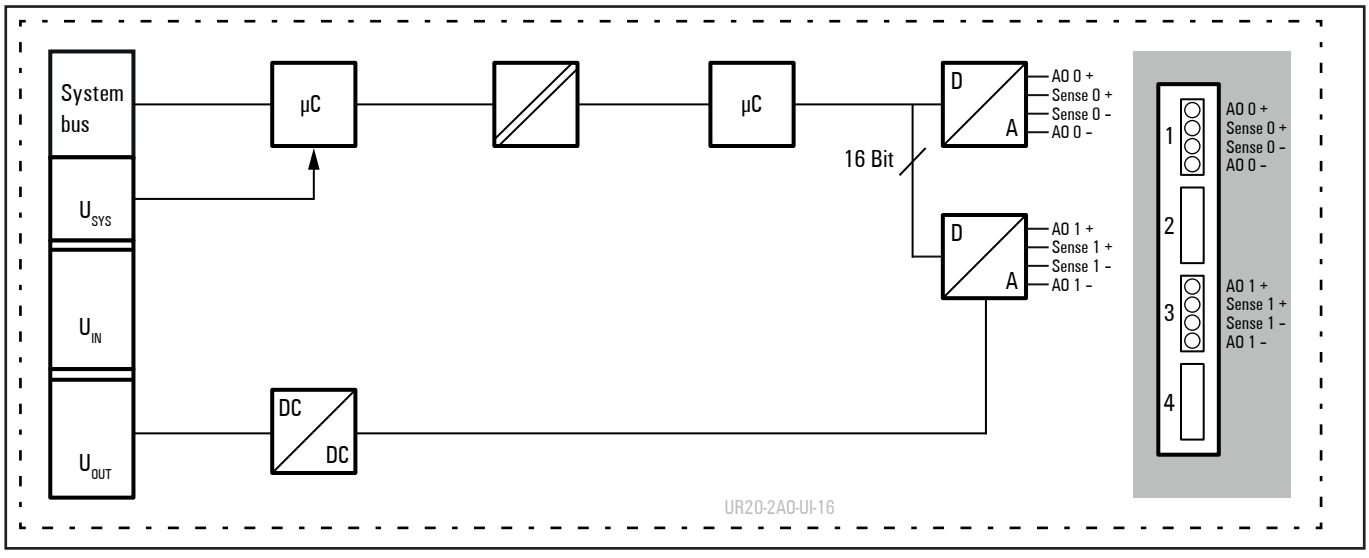

Block diagram UR20-2AO-UI-16

Technical data UR20-2AO-UI-16 (Item No. 2705630000)

System data		
Data	Process, parameter and diagnostic data depend on the coupler used, see coupler description.	
Interface	u-remote system bus	
System bus transfer rate	48 Mbps	
Potential isolation	Channel/system bus	yes
	Channel/channel	no
Outputs		
Number	2	
Output levels	1. Voltage (0 ... 5 V, ±5 V, 0 ... 10 V, ±10 V, 1 ... 5 V, 2 ... 10 V) 2. Current (0 ... 20 mA, 4 ... 20 mA)	
Response time	1 ms for 2 channels	
Resolution	16 bits	
Accuracy	0.1 % FSR max., 0.05 % FSR typ.	
Temperature coefficient	30 ppm/K	
Max. error between T_{min} and T_{max}	± 0,24 % FSR	
Monotony	yes	
Crosstalk between the channels	±0.001 % FSR max.	
Repeat accuracy	< ±1 mV eff.	
Voltage load resistance	≥ 1 kΩ	
Current load resistance	≤ 600 Ω	
Actuator connection	Automatic detection: 2-wire (current and voltage) or 4-wire (voltage)	
Short-circuit-proof	yes	
Module diagnosis	yes	
Individual channel diagnosis	no	
Substitute value	yes	
Can be used with PF-O-xDI-SIL	yes	
Supply		
Supply voltage	24 V DC +20 %/-15 %	
Current consumption from system current path I_{SYS}	8 mA	
Current consumption from output current path I_{OUT}	56 mA	
General data		
Weight (operational status)	83 g	
For additional general data, see Section 3.4		

Overview of the editable parameters UR20-2AO-UI-16

Channel	Description	Options[1)]	Default
0 ... 1	Data format	S5 Data format (0) / S7 Data format (1)	S7 Data format
0 ... 1	Output range	0 to 20 mA (0) / 4 to 20 mA (1) / 0 to 10 V (2) / -10 to 10 V (3) / 0 to 5 V (4) / -5 to 5 V (5) / 1 to 5 V (6) / 2 to 10 V (7) /disabled (8)	disabled
0 ... 1	Substitute value	depending on the channels data format (S5/S7), see Table "Output range"	0

1) Values in brackets for Modbus-TCP (firmware version 02.00.00 and higher), CANopen, EtherCAT and EtherNet/IP via module parameter class

Diagnostic data UR20-2AO-UI-16

Name	Bytes	Bit	Description	Default
Error indicator	0	0	Module error	
		1	Internal error	
		2	External error	
		3	Channel error	0
		4	Error	
		5	Reserved	0
		6	Reserved	0
		7	Parameter error	
Module typ	1	0	Module Type	0x05
		1		
		2		
		3		
		4	Reserved	0
		5	Reserved	0
		6	Reserved	0
		7	Reserved	0
Error byte 2	2	0 ... 7	Reserved	0
Error byte 3	3	0 ... 2	Reserved	0
		3	Internal diagnostic FIFO full	
		4	Power supply fault	
		5	Reserved	0
		6	Reserved	0
		7	Reserved	0
Channel type	4	0 ... 6	Channel type	0x73
		7	Reserved	0
Diagnostic bits per channel	5		Number of diagnostic bit per channel	0
Number of channels	6		Number of similar channels per module	2
Channel error	7 ... 10	0 ... 31	Reserved	0
Channel 0 error to Channel 31 error	11 ... 42	0 ... 7	Reserved	0
Time stamp	43-46		time stamp [µs] (32bit)	

Process data[1)] outputs UR20-2AO-UI-16

Byte	Format	Description
QB0	Word	AO0
QB1		
QB2	Word	AO1
QB3		

1) Internal process data mapping with data format "Standard". Depending on the fieldbus specification and the data format of the communicating fieldbus components the bytes and/or words can be reversed during data transfer.

Output range[1] UR20-2AO-UI-16

Output range	Current (I) / Voltage (U)	Decimal (D)	Hexadecimal	Range	Conversion
0 – 20 mA Siemens S7 format	23.52 mA	32511	0x7EFF	Overloading	D = 27648 x I / 20 I = D x 20 / 27648
	20 mA	27648	0x6C00	Nominal range	
	10 mA	13824	0x3600		
	0 mA	0	0x0000		
0 – 20 mA Siemens S5 format	23.52 mA	19268	0x4B44	Overloading	D = 16384 x I / 20 I = D x 20 / 16384
	20 mA	16384	0x4000	Nominal range	
	10 mA	8192	0x2000		
	0 mA	0	0x0000		
4 – 20 mA Siemens S7 format	22.81 mA	32511	0x7EFF	Overloading	D = 27648 x (I – 4) / 16 I= D x 16 / 27648 + 4
	20 mA	27648	0x6C00	Nominal range	
	12 mA	13824	0x3600		
	4 mA	0	0x0000		
	1.19 mA	-4864	0xED00	Underloading	
4 – 20 mA Siemens S5 format	22.82 mA	19268	0x4B44	Overloading	D = 27648 x (I – 4) / 16 I = D x 16 / 16384 + 4
	20 mA	16384	0x4000	Nominal range	
	12 mA	8192	0x2000		
	4 mA	0	0x0000		
	0.8 mA	-3277	0xF333	Underloading	
0 – 10 V Siemens S7 format	11.76 V	32511	0x7EFF	Overloading	D = 27648 x U/10 U = D x 10 / 27648
	10 V	27648	0x6C00	Nominal range	
	5 V	13824	0x3600		
	0 V	0	0x0000		
0 – 10 V Siemens S5 format	11.76 V	19268	0x4B44	Overloading	D = 16384 x U / 10 U = D x 10 / 16384
	10 V	16384	0x4000	Nominal range	
	5 V	8192	0x2000		
	0 V	0	0x0000		

1) If the process value is beyond the valid output range, the corresponding channel releases 0 V and 0 mA respectively.

Output range[1] UR20-2AO-UI-16

Output range	Current (I) / Voltage (U)	Decimal (D)	Hexadecimal	Range	Conversion
±10 V Siemens S7 format	11.76 V	32511	0x7EFF	Overloading	D = 27648 x U / 10 U = D x 10 / 27648
	10 V	27648	0x6C00	Nominal range	
	5 V	13824	0x3600		
	0 V	0	0x0000		
	-5 V	-13824	0xCA00		
	-10 V	-27648	0x9400		
	-11.76 V	-32512	0x8100	Underloading	
±10 V Siemens S5 format	11,76 V	19268	0x4B44	Overloading	D = 16384 x U / 10 U = D x 10 / 16384
	10 V	16384	0x4000	Nominal range	
	5 V	8192	0x2000		
	0 V	0	0x0000		
	-5 V	-8192	0xE000		
	-10 V	-16384	0xC000		
	-11,76 V	-19268	0xB4BC	Underloading	
2 ... 10 V Siemens S7 format	11,41 V	32511	0x7EFF	Overloading	D = 27648 x (U – 2) / 8 U = D x 8 / 27648 + 2
	10 V	27648	0x6C00	Nominal range	
	6 V	13824	0x3600		
	2 V	0	0x0000		
	0,59 V	-4864	0xED00	Underloading	
2 ... 10 V Siemens S5 format	11,41 V	19268	0x4B44	Overloading	D = 16384 x (U – 2) / 8 U = D x 8 / 16384 + 2
	10 V	16384	0x4000	Nominal range	
	6 V	8192	0x2000		
	2V	0	0x0000		
	0,40 V	-3277	0xF333	Underloading	
1 ... 5 V Siemens S7 format	5,7 V	32511	0x7EFF	Overloading	D = 27648 x (U – 1) / 4 U = D x 4 / 27648 + 1
	5 V	27648	0x6C00	Nominal range	
	3 V	13824	0x3600		
	1 V	0	0x0000		
	0,30 V	-4864	0xED00	Underloading	

1) If the process value is beyond the valid output range, the corresponding channel releases 0 V and 0 mA respectively.

Output range[1] UR20-2AO-UI-16

Output range	Current (I) / Voltage (U)	Decimal (D)	Hexadecimal	Range	Conversion
1 ... 5 V Siemens S5 format	5,7 V	19268	0x4B44	Overloading	D = 16384 x (U – 1) / 4 U = D x 4 / 16384 + 1
	5 V	16384	0x4000	Nominal range	
	3 V	8192	0x2000		
	1 V	0	0x0000		
	0,20 V	-3277	0xF333	Underloading	
0 ... 5 V Siemens S7 format	5,88 V	32511	0x7EFF	Overloading	D = 27648 x U / 5 U = D x 5 / 27648
	5 V	27648	0x6C00	Nominal range	
	2,5 V	13824	0x3600		
	0 V	0	0x0000		
0 ... 5 V Siemens S5 format	5,88 V	19268	0x4B44	Overloading	D = 16384 x U / 5 U = D x 5 / 16384
	5 V	16384	0x4000	Nominal range	
	2,5 V	8192	0x2000		
	0 V	0	0x0000		
±5 V Siemens S7 format	5,88 V	32511	0x7EFF	Overloading	D = 27648 x U / 5 U = D x 5 / 27648
	5 V	27648	0x6C00	Nominal range	
	2,5	13824	0x3600		
	0 V	0	0x0000		
	-2,5 V	-13824	0xCA00		
	-5 V	-27648	0x9400		
	-5,88 V	-32512	0x8100	Underloading	
±5 V Siemens S5 format	5,88 V	19268	0x4B44	Overloading	D = 16384 x U / 5 U = D x 5 / 16384
	5 V	16384	0x4000	Nominal range	
	2,5	8192	0x2000		
	0 V	0	0x0000		
	-2,5 V	-8192	0xE000		
	-5 V	-16384	0xC000		
	-5,88 V	-19268	0xB4BC	Underloading	

1) If the process value is beyond the valid output range, the corresponding channel releases 0 V and 0 mA respectively.

The following applies for all S5 and S7 ranges:
value > overload range = output deactivated
value < underload range = output deactivated

6.67 Analogue output module UR20-2AO-UI-16-DIAG

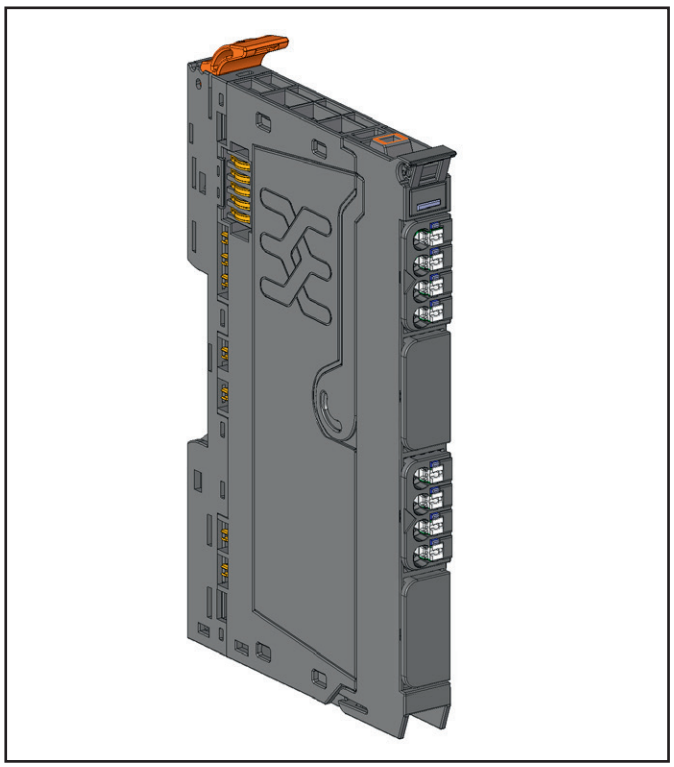

Analogue output module UR20-2AO-UI-16-DIAG (Item No. 2566100000)

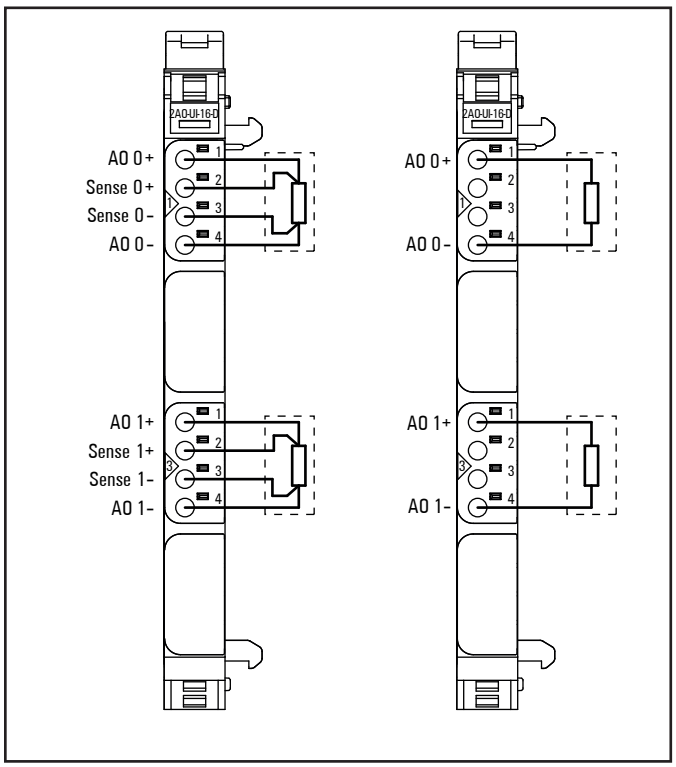

Connection diagram UR20-2AO-UI-16-DIAG

The analogue output module UR20-2AO-UI-16-DIAG can control up to 2 analogue actuators with ±10 V, ±5 V, 0 ... 10 V, 0 ... 5 V, 2 ... 10 V, 1 ... 5 V, 0 ... 20 mA or 4 ... 20 mA. The resolution is 16 bit per channel. An actuator can be connected to each connector in a 2-wire or 4-wire connection, the internal switching is carried out automatically. The output range is defined using parameterisation. A status LED is assigned to each channel. The outputs are supplied with power from the output current path (I_{OUT}). The outputs are decoupled from the system bus I_{SYS}, but there is no potential isolation to the output current path I_{OUT}.

The module provides individual channel diagnosis with channel related error messages.

ATTENTION

The module can be destroyed!

Connections AO 0– and AO 1– are connected to the supply potential (GND OUT).

► Realise the wiring in such a way that no compensation current will flow through the module.

Please regard the following notes when wiring, to avoid perturbation effects and to ensure proper function of the module.

► Use shielded analogue lines only and earth them on both ends. In case of potential differences between the ends, you should earth one end only.

► Always use shielded twisted pair lines when connecting the actuators.

► Shielding: Apply the cable schield to the functional earth directly on entering the cabinet; on applications without cabinet apply it to a shield bus.



	Module status LED Green: Communication over the system bus Red: Error
1.1	Red: Channel 0 at voltage output: overload or short circuit, at current output: shunt resistance too high or line break detected
3.1	Red: Channel 1 at voltage output: overload or short circuit, at current output: shunt resistance too high or line break detected

LED indicators UR20-2AO-UI-16-DIAG, troubleshooting see Chapter 12

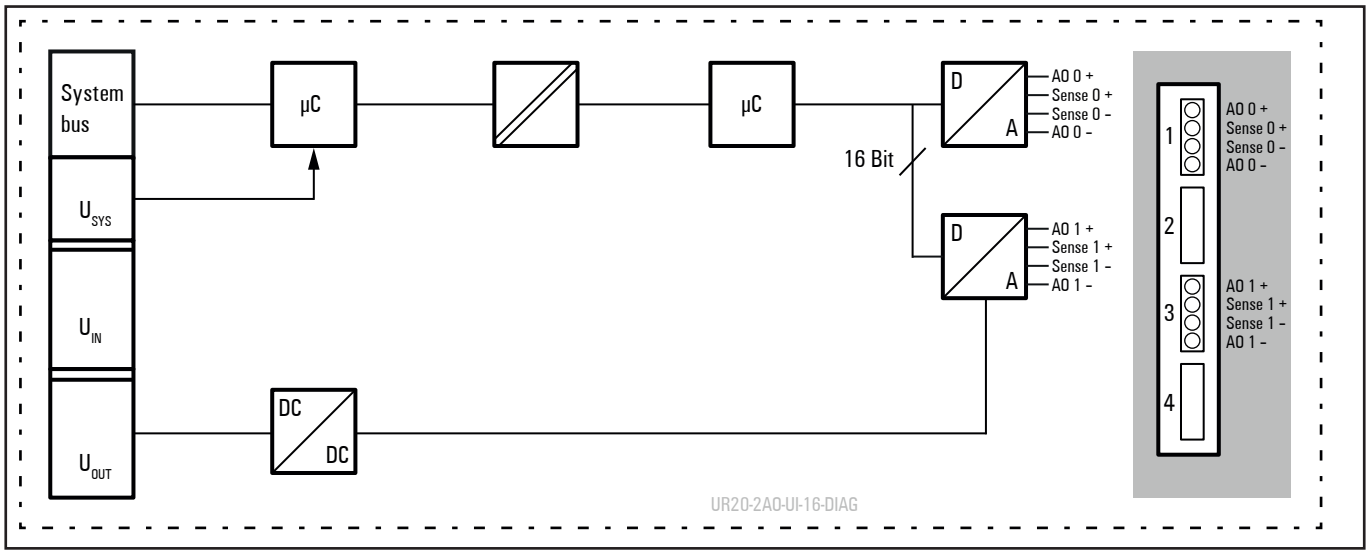

Block diagram UR20-2AO-UI-16-DIAG

Technical data UR20-2AO-UI-16-DIAG (Item No. 2566100000)

System data		
Data	Process, parameter and diagnostic data depend on the coupler used, see coupler description.	
Interface	u-remote system bus	
System bus transfer rate	48 Mbps	
Potential isolation	Channel/system bus	yes
	Channel/channel	no
Outputs		
Number	2	
Output levels	1. Voltage (0 ... 5 V, ±5 V, 0 ... 10 V, ±10 V, 1 ... 5 V, 2 ... 10 V) 2. Current (0 ... 20 mA, 4 ... 20 mA)	
Response time	1 ms for 2 channels	
Resolution	16 bits	
Accuracy	0.1 % FSR max., 0.05 % FSR typ.	
Temperature coefficient	30 ppm/K	
Max. error between T_{min} and T_{max}	± 0,24 % FSR	
Monotony	yes	
Crosstalk between the channels	±0.001 % FSR max.	
Repeat accuracy	< ±1 mV eff.	
Voltage load resistance	≥ 1 kΩ	
Current load resistance	≤ 600 Ω	
Actuator connection	Automatic detection: 2-wire (current and voltage) or 4-wire (voltage)	
Short-circuit-proof	yes	
Module diagnosis	yes	
Individual channel diagnosis	yes	
Substitute value	yes	
Can be used with PF-O-xDI-SIL	yes	
Supply		
Supply voltage	24 V DC +20 %/-15 %	
Current consumption from system current path I_{SYS}	8 mA	
Current consumption from output current path I_{OUT}	56 mA	
General data		
Weight (operational status)	83 g	
For additional general data, see Section 3.4		

Overview of the editable parameters UR20-2AO-UI-16-DIAG

Channel	Description	Options[1)]	Default
0 ... 1	Data format	S5 Data format (0) / S7 Data format (1)	S7 Data format
0 ... 1	Output range	0 to 20 mA (0) / 4 to 20 mA (1) / 0 to 10 V (2) / -10 to 10 V (3) / 0 to 5 V (4) / -5 to 5 V (5) / 1 to 5 V (6) / 2 to 10 V (7) /disabled (8)	disabled
0 ... 1	Substitute value	depending on the channels data format (S5/S7), see Table "Output range"	0
0 ... 1	Channel diagnosis	disabled (0) / enabled (1)	disabled

1) Values in brackets for Modbus-TCP (firmware version 02.00.00 and higher), CANopen, EtherCAT and EtherNet/IP via module parameter class

Diagnostic data UR20-2AO-UI-16-DIAG

Name	Bytes	Bit	Description	Default
Error indicator	0	0	Module error	
		1	Internal error	
		2	External error	
		3	Channel error	
		4	Reserved	0
		5	Power supply fault	
		6	Reserved	0
		7	Parameter error	
Module type	1	0	Module Type	0x05
		1		
		2		
		3		
		4	Channel information available	1
		5 - 7	Reserved	0
Error byte 2	2	0 - 7	Reserved	0
Error byte 3	3	0 - 2	Reserved	0
		3	Internal diagnostic FIFO full	
		4	Power supply fault	
		5	Reserved	0
		6	Reserved	
		7	Reserved	0
Channel type	4	0 - 6	Channel type	0x73
		7	Reserved	0
Diagnostic bits per channel	5		Number of diagnostic bit per channel	8
Number of channels	6		Number of similar channels per module	2
Channel error	7	0	Error at channel 0	
		1	Error at channel 1	
		2 ... 7	Reserved	0
	8 ... 10	0 ... 31	Reserved	0
Error Channel 0	11	0	Parameter Error	
		1	Overtemperature	
		2	Overload	
		3	Error	
		4	Line break	
		5 ... 7	Reserved	0
Error Channel 1	12	0	Parameter Error	
		1	Overtemperature	
		2	Overload	
		3	Error	
		4	Line break	
		5 ... 7	Reserved	0
Channel 2 error to Channel 31 error	13 - 42	0 - 7	Reserved	0
Time stamp	43 - 46		Time stamp [µs] (32 bit)	

Process data[1] outputs UR20-2AO-UI-16-DIAG

Byte	Format	Description
QB0	Word	AO0
QB1		
QB2	Word	AO1
QB3		

1) Internal process data mapping with data format "Standard". Depending on the fieldbus specification and the data format of the communicating fieldbus components the bytes and/or words can be reversed during data transfer.

Output range[1] UR20-2AO-UI-16-DIAG

Output range	Current (I) / Voltage (U)	Decimal (D)	Hexadecimal	Range	Conversion
0 ... 20 mA Siemens S7 format	23.52 mA	32511	0x7EFF	Overloading	D = 27648 x I / 20 I = D x 20 / 27648
	20 mA	27648	0x6C00	Nominal range	
	10 mA	13824	0x3600		
	0 mA	0	0x0000		
0 ... 20 mA Siemens S5 format	23.52 mA	19268	0x4B44	Overloading	D = 16384 x I / 20 I = D x 20 / 16384
	20 mA	16384	0x4000	Nominal range	
	10 mA	8192	0x2000		
	0 mA	0	0x0000		
4 ... 20mA Siemens S7 format	22.81 mA	32511	0x7EFF	Overloading	D = 27648 x (I - 4) / 16 I= D x 16 / 27648 + 4
	20 mA	27648	0x6C00	Nominal range	
	12 mA	13824	0x3600		
	4 mA	0	0x0000		
	1.19 mA	-4864	0xED00	Underloading	
4 ... 20mA Siemens S5 format	22.82 mA	19268	0x4B44	Overloading	D = 27648 x (I - 4) / 16 I = D x 16 / 16384 + 4
	20 mA	16384	0x4000	Nominal range	
	12 mA	8192	0x2000		
	4 mA	0	0x0000		
	0.8 mA	-3277	0xF333	Underloading	
0 ... 10 V Siemens S7 format	11.76 V	32511	0x7EFF	Overloading	D = 27648 x U/10 U = D x 10 / 27648
	10 V	27648	0x6C00	Nominal range	
	5 V	13824	0x3600		
	0 V	0	0x0000		
0 ... 10 V Siemens S5 format	11.76 V	19268	0x4B44	Overloading	D = 16384 x U / 10 U = D x 10 / 16384
	10 V	16384	0x4000	Nominal range	
	5 V	8192	0x2000		
	0 V	0	0x0000		

1) If the process value is beyond the valid output range, the corresponding channel releases 0 V and 0 mA respectively.

Output range[1] UR20-2AO-UI-16-DIAG

Output range	Current (I) / Voltage (U)	Decimal (D)	Hexadecimal	Range	Conversion
±10 V Siemens S7 format	11.76 V	32511	0x7EFF	Overloading	D = 27648 x U / 10 U = D x 10 / 27648
	10 V	27648	0x6C00	Nominal range	
	5 V	13824	0x3600		
	0 V	0	0x0000		
	-5 V	-13824	0xCA00		
	-10 V	-27648	0x9400		
	-11.76 V	-32512	0x8100	Underloading	
±10 V Siemens S5 format	11,76 V	19268	0x4B44	Overloading	D = 16384 x U / 10 U = D x 10 / 16384
	10 V	16384	0x4000	Nominal range	
	5 V	8192	0x2000		
	0 V	0	0x0000		
	-5 V	-8192	0xE000		
	-10 V	-16384	0xC000		
	-11,76 V	-19268	0xB4BC	Underloading	
2 ... 10 V Siemens S7 format	11,41 V	32511	0x7EFF	Overloading	D = 27648 x (U – 2) / 8 U = D x 8 / 27648 + 2
	10 V	27648	0x6C00	Nominal range	
	6 V	13824	0x3600		
	2 V	0	0x0000		
	0,59 V	-4864	0xED00	Underloading	
2 ... 10 V Siemens S5 format	11,41 V	19268	0x4B44	Overloading	D = 16384 x (U – 2) / 8 U = D x 8 / 16384 + 2
	10 V	16384	0x4000	Nominal range	
	6 V	8192	0x2000		
	2V	0	0x0000		
	0,40 V	-3277	0xF333	Underloading	
1 ... 5 V Siemens S7 format	5,7 V	32511	0x7EFF	Overloading	D = 27648 x (U – 1) / 4 U = D x 4 / 27648 + 1
	5 V	27648	0x6C00	Nominal range	
	3 V	13824	0x3600		
	1 V	0	0x0000		
	0,30 V	-4864	0xED00	Underloading	

1) If the process value is beyond the valid output range, the corresponding channel releases 0 V and 0 mA respectively.

Output range[1] UR20-2AO-UI-16-DIAG

Output range	Current (I) / Voltage (U)	Decimal (D)	Hexadecimal	Range	Conversion
1 ... 5 V Siemens S5 format	5,7 V	19268	0x4B44	Overloading	D = 16384 x (U – 1) / 4 U = D x 4 / 16384 + 1
	5 V	16384	0x4000	Nominal range	
	3 V	8192	0x2000		
	1 V	0	0x0000		
	0,20 V	-3277	0xF333	Underloading	
0 ... 5 V Siemens S7 format	5,88 V	32511	0x7EFF	Overloading	D = 27648 x U / 5 U = D x 5 / 27648
	5 V	27648	0x6C00	Nominal range	
	2,5 V	13824	0x3600		
	0 V	0	0x0000		
0 ... 5 V Siemens S5 format	5,88 V	19268	0x4B44	Overloading	D = 16384 x U / 5 U = D x 5 / 16384
	5 V	16384	0x4000	Nominal range	
	2,5 V	8192	0x2000		
	0 V	0	0x0000		
±5 V Siemens S7 format	5,88 V	32511	0x7EFF	Overloading	D = 27648 x U / 5 U = D x 5 / 27648
	5 V	27648	0x6C00	Nominal range	
	2,5	13824	0x3600		
	0 V	0	0x0000		
	-2,5 V	-13824	0xCA00		
	-5 V	-27648	0x9400		
	-5,88 V	-32512	0x8100	Underloading	
±5 V Siemens S5 format	5,88 V	19268	0x4B44	Overloading	D = 16384 x U / 5 U = D x 5 / 16384
	5 V	16384	0x4000	Nominal range	
	2,5	8192	0x2000		
	0 V	0	0x0000		
	-2,5 V	-8192	0xE000		
	-5 V	-16384	0xC000		
	-5,88 V	-19268	0xB4BC	Underloading	

1) If the process value is beyond the valid output range, the corresponding channel releases 0 V and 0 mA respectively.

The following applies for all S5 and S7 ranges:
value > overload range = output deactivated
value < underload range = output deactivated

6.68 Analogue output module UR20-2AO-UI-ISO-16-DIAG

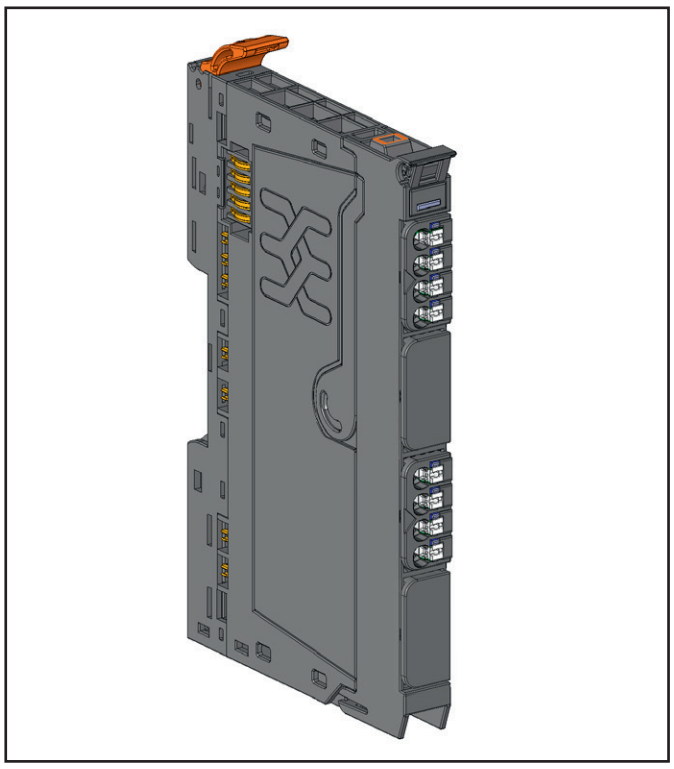

Analogue output module UR20-2AO-UI-ISO-16-DIAG (Item No. 2566970000)

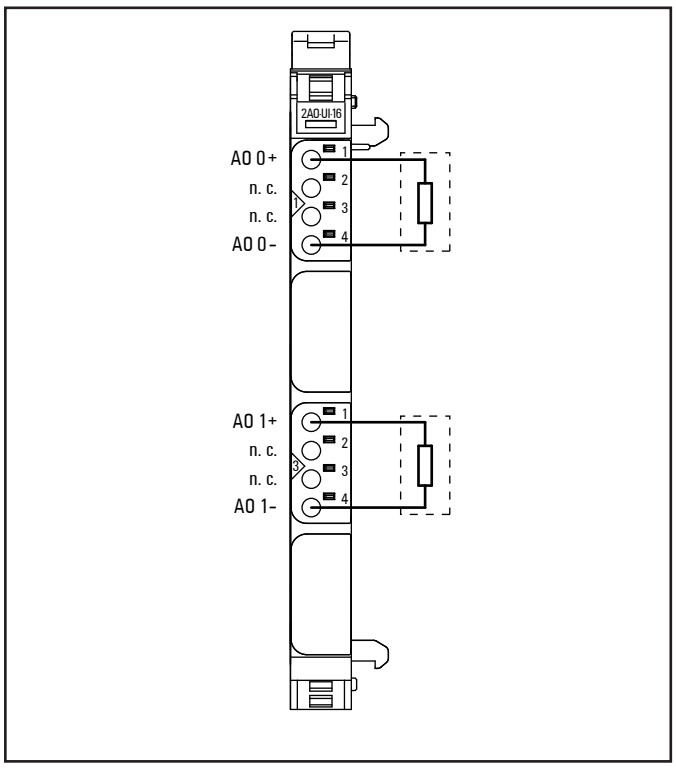

Connection diagram UR20-2AO-UI-ISO-16-DIAG

The analogue output module UR20-2AO-UI-ISO-16-DIAG can control up to 4 analogue actuators with ±10 V, ±5 V, 0 ... 10 V, 0 ... 5 V, 2 ... 10 V, 1 ... 5 V, 0 ... 20 mA or 4 ... 20 mA. The resolution is 16 bit per channel. An actuator can be connected to each connector in a 2-wire connection. The output range is defined using parameterisation. A status LED is assigned to each channel. The outputs are supplied with power from the output current path (I_{OUT}). The outputs are decoupled from the system bus I_{SYS}, from the output current path I_{OUT} and from each other.

The module provides individual channel diagnosis with channel related error messages.

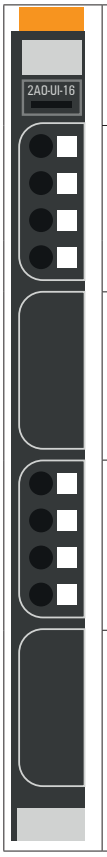

	Module status LED Green: Communication over the system bus Red: Error
1.1	Red: Channel 0 at voltage output: overload or short circuit, at current output: shunt resistance too high or line break detected
3.1	Red: Channel 1 at voltage output: overload or short circuit, at current output: shunt resistance too high or line break detected

LED indicators UR20-2AO-UI-ISO-16-DIAG, troubleshooting see Chapter 12

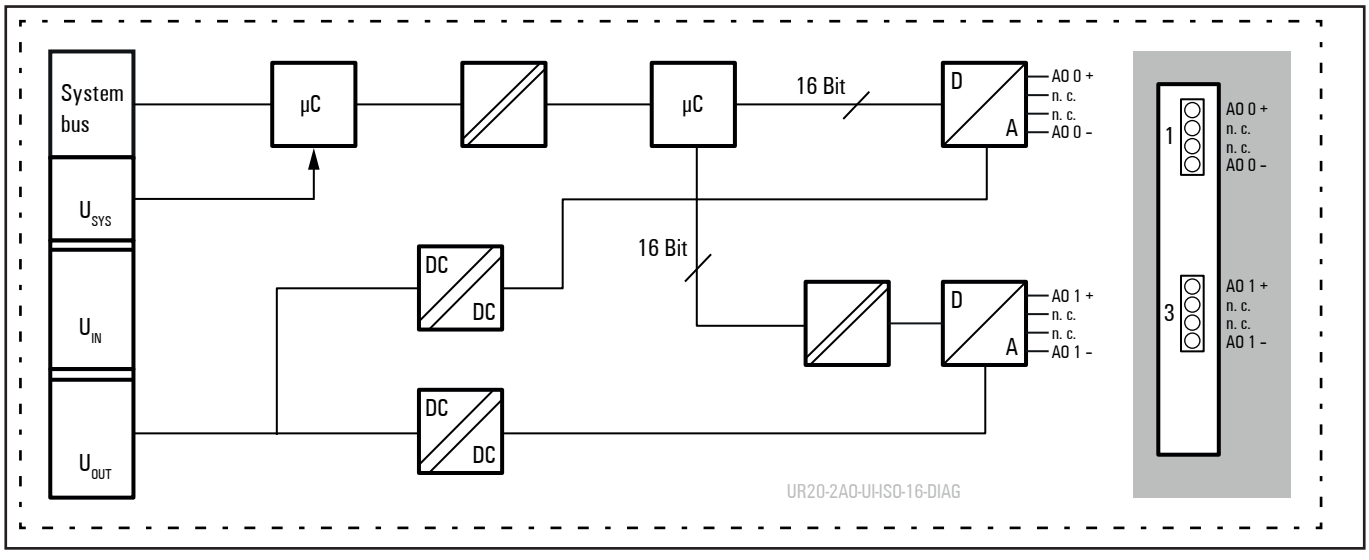

Block diagram UR20-2AO-UI-ISO-16-DIAG

Technical data UR20-2AO-UI-ISO-16-DIAG (Item No. 2566970000)

System data		
Data	Process, parameter and diagnostic data depend on the coupler used, see the table in Section 4.11.	
Interface	u-remote system bus	
System bus transfer rate	48 Mbps	
Potential isolation	Channel/system bus	yes
	Channel/channel	yes
Outputs		
Number	2	
Output levels	1. Voltage (0 ... 5 V, ±5 V, 0 ... 10 V, ±10 V, 1 ... 5 V, 2 ... 10 V) 2. Current (0 ... 20 mA, 4 ... 20 mA)	
Response time	1 ms for 2 channels	
Resolution	16 bits	
Accuracy	0.1 % FSR max., 0.05 % FSR typ.	
Temperature coefficient	30 ppm/K	
Max. error between T_{min} and T_{max}	± 0,24 % FSR	
Monotony	yes	
Crosstalk between the channels	±0.001 % FSR max.	
Repeat accuracy	< ±1 mV / 2 µA	
Output ripple	max. 0,01 % FSR	
Voltage load resistance	≥ 1 kΩ	
Current load resistance	≤ 600 Ω	
Actuator connection	2-wire	
Short-circuit-proof	yes	
Module diagnosis	yes	
Individual channel diagnosis	yes	
Substitute value	yes	
Can be used with PF-O-xDI-SIL	yes	
Supply		
Supply voltage	24 V DC +20 %/-15 %	
Current consumption from system current path I_{SYS}	8 mA	
Current consumption from output current path I_{OUT}	80 mA	
General data		
Weight (operational status)	85 g	
For additional general data, see Section 3.4		

Overview of the editable parameters UR20-2AO-UI-ISO-16-DIAG

Channel	Description	Options[1)]	Default
0 ... 1	Data format	S5 Data format (0) / S7 Data format (1) / User scale (2)	S7 Data format
0 ... 1	Output range	0 to 20 mA (0) / 4 to 20 mA (1) / 0 to 10 V (2) / -10 to 10 V (3) / 0 to 5 V (4) / -5 to 5 V (5) / 1 to 5 V (6) / 2 to 10 V (7) /disabled (8)	disabled
0 ... 1	Channel diagnosis	disabled (0) / enabled (1)	disabled
0 ... 1	Substitute value	-32768 ... 32767	0
0 ... 1	User scale offset	16 Bit signed, -32768 ... 32767	0
0 ... 1	User full scale value	16 Bit signed, -32768 ... 32767	0x7FFF

1) Values in brackets for Modbus-TCP (firmware version 02.00.00 and higher), CANopen, EtherCAT and EtherNet/IP via module parameter class

Diagnostic data UR20-2AO-UI-ISO-16-DIAG

Name	Bytes	Bit	Description	Default
Error indicator	0	0	Module error	
		1	Internal error	
		2	External error	
		3	Channel error	
		4	Reserved	0
		5	Power supply fault	
		6	Reserved	0
		7	Parameter error	
Module type	1	0	Module Type	0x05
		1		
		2		
		3		
		4	Channel information available	1
		5 – 7	Reserved	0
Error byte 2	2	0 – 7	Reserved	0
Error byte 3	3	0 – 2	Reserved	0
		3	Internal diagnostic FIFO full	
		4	Power supply fault	
		5 ... 7	Reserved	0
Channel type	4	0 – 6	Channel type	0x73
		7	Reserved	0
Diagnostic bits per channel	5		Number of diagnostic bit per channel	8
Number of channels	6		Number of similar channels per module	2
Channel error	7	0	Error at channel 0	
		1	Error at channel 1	
		2 ... 7	Reserved	0
	8 ... 10	0 ... 31	Reserved	0
Error Channel 0	11	0	Parameter Error	
		1	Overtemperature	
		2	Overload	
		3	Error	
		4	Line break	
		5 ... 7	Reserved	0
Error Channel 1	12	0	Parameter Error	
		1	Overtemperature	
		2	Overload	
		3	Error	
		4	Line break	
		5 ... 7	Reserved	0
Channel 4 error to Channel 31 error	15 – 42	0 – 7	Reserved	0
Time stamp	43 – 46		Time stamp [µs] (32 bit)	

Process data[1] outputs UR20-2AO-UI-ISO-16-DIAG

Byte	Format	Description
QB0	Word	AO0
QB1		
QB2	Word	AO1
QB3		

1) Internal process data mapping with data format “Standard”. Depending on the fieldbus specification and the data format of the communicating fieldbus components the bytes and/or words can be reversed during data transfer.

Output range[1] UR20-2AO-UI-ISO-16-DIAG

Output range	Current (I) / Voltage (U)	Decimal (D)	Hexadecimal	Range	Conversion
0 ... 20 mA Siemens S7 format	23.52 mA	32511	0x7EFF	Overloading	D = 27648 x I / 20 I = D x 20 / 27648
	20 mA	27648	0x6C00	Nominal range	
	10 mA	13824	0x3600		
	0 mA	0	0x0000		
0 ... 20 mA Siemens S5 format	23.52 mA	19268	0x4B44	Overloading	D = 16384 x I / 20 I = D x 20 / 16384
	20 mA	16384	0x4000	Nominal range	
	10 mA	8192	0x2000		
	0 mA	0	0x0000		
4 ... 20mA Siemens S7 format	22.81 mA	32511	0x7EFF	Overloading	D = 27648 x (I - 4) / 16 I= D x 16 / 27648 + 4
	20 mA	27648	0x6C00	Nominal range	
	12 mA	13824	0x3600		
	4 mA	0	0x0000		
	1.19 mA	-4864	0xED00	Underloading	
4 ... 20mA Siemens S5 format	22.82 mA	19268	0x4B44	Overloading	D = 27648 x (I - 4) / 16 I = D x 16 / 16384 + 4
	20 mA	16384	0x4000	Nominal range	
	12 mA	8192	0x2000		
	4 mA	0	0x0000		
	0.8 mA	-3277	0xF333	Underloading	
0 ... 10 V Siemens S7 format	11.76 V	32511	0x7EFF	Overloading	D = 27648 x U/10 U = D x 10 / 27648
	10 V	27648	0x6C00	Nominal range	
	5 V	13824	0x3600		
	0 V	0	0x0000		
0 ... 10 V Siemens S5 format	11.76 V	19268	0x4B44	Overloading	D = 16384 x U / 10 U = D x 10 / 16384
	10 V	16384	0x4000	Nominal range	
	5 V	8192	0x2000		
	0 V	0	0x0000		

1) If the process value is beyond the valid output range, the corresponding channel releases 0 V and 0 mA respectively.

Output range[1] UR20-2AO-UI-ISO-16-DIAG

Output range	Current (I) / Voltage (U)	Decimal (D)	Hexadecimal	Range	Conversion
±10 V Siemens S7 format	11.76 V	32511	0x7EFF	Overloading	D = 27648 x U / 10 U = D x 10 / 27648
	10 V	27648	0x6C00	Nominal range	
	5 V	13824	0x3600		
	0 V	0	0x0000		
	-5 V	-13824	0xCA00		
	-10 V	-27648	0x9400		
	-11.76 V	-32512	0x8100	Underloading	
±10 V Siemens S5 format	11,76 V	19268	0x4B44	Overloading	D = 16384 x U / 10 U = D x 10 / 16384
	10 V	16384	0x4000	Nominal range	
	5 V	8192	0x2000		
	0 V	0	0x0000		
	-5 V	-8192	0xE000		
	-10 V	-16384	0xC000		
	-11,76 V	-19268	0xB4BC	Underloading	
2 ... 10 V Siemens S7 format	11,41 V	32511	0x7EFF	Overloading	D = 27648 x (U – 2) / 8 U = D x 8 / 27648 + 2
	10 V	27648	0x6C00	Nominal range	
	6 V	13824	0x3600		
	2 V	0	0x0000		
	0,59 V	-4864	0xED00	Underloading	
2 ... 10 V Siemens S5 format	11,41 V	19268	0x4B44	Overloading	D = 16384 x (U – 2) / 8 U = D x 8 / 16384 + 2
	10 V	16384	0x4000	Nominal range	
	6 V	8192	0x2000		
	2V	0	0x0000		
	0,40 V	-3277	0xF333	Underloading	
1 ... 5 V Siemens S7 format	5,7 V	32511	0x7EFF	Overloading	D = 27648 x (U – 1) / 4 U = D x 4 / 27648 + 1
	5 V	27648	0x6C00	Nominal range	
	3 V	13824	0x3600		
	1 V	0	0x0000		
	0,30 V	-4864	0xED00	Underloading	

1) If the process value is beyond the valid output range, the corresponding channel releases 0 V and 0 mA respectively.

Output range[1] UR20-2AO-UI-ISO-16-DIAG

Output range	Current (I) / Voltage (U)	Decimal (D)	Hexadecimal	Range	Conversion
1 ... 5 V Siemens S5 format	5,7 V	19268	0x4B44	Overloading	D = 16384 x (U – 1) / 4 U = D x 4 / 16384 + 1
	5 V	16384	0x4000	Nominal range	
	3 V	8192	0x2000		
	1 V	0	0x0000		
	0,20 V	-3277	0xF333	Underloading	
0 ... 5 V Siemens S7 format	5,88 V	32511	0x7EFF	Overloading	D = 27648 x U / 5 U = D x 5 / 27648
	5 V	27648	0x6C00	Nominal range	
	2,5 V	13824	0x3600		
	0 V	0	0x0000		
0 ... 5 V Siemens S5 format	5,88 V	19268	0x4B44	Overloading	D = 16384 x U / 5 U = D x 5 / 16384
	5 V	16384	0x4000	Nominal range	
	2,5 V	8192	0x2000		
	0 V	0	0x0000		
±5 V Siemens S7 format	5,88 V	32511	0x7EFF	Overloading	D = 27648 x U / 5 U = D x 5 / 27648
	5 V	27648	0x6C00	Nominal range	
	2,5	13824	0x3600		
	0 V	0	0x0000		
	-2,5 V	-13824	0xCA00		
	-5 V	-27648	0x9400		
	-5,88 V	-32512	0x8100	Underloading	
±5 V Siemens S5 format	5,88 V	19268	0x4B44	Overloading	D = 16384 x U / 5 U = D x 5 / 16384
	5 V	16384	0x4000	Nominal range	
	2,5	8192	0x2000		
	0 V	0	0x0000		
	-2,5 V	-8192	0xE000		
	-5 V	-16384	0xC000		
	-5,88 V	-19268	0xB4BC	Underloading	

1) If the process value is beyond the valid output range, the corresponding channel releases 0 V and 0 mA respectively.

The following applies for all S5 and S7 ranges:
value > overload range = output deactivated
value < underload range = output deactivated

Output range UR20-2AO-UI-ISO-16-DIAG

Output range	Current (I)	Decimal (D)	Hexadecimal	Range	Conversion[1)]
0 ... 20 mA User scale	24 mA			Overloading	D = (EV - OS) x I / 20 mA + OS I = (D - OS) / (EV - OS) x 20 mA
	20 mA	EV	EV	Nominal range	
	0 mA	OS	OS		
	0 mA			Underloading	
4 ... 20 mA User scale	24 mA			Overloading	D = (EV - OS) x (I - 4mA) / 16 mA + OS I= (D - OS) / (EV - OS) x 16 mA + 4 mA
	20 mA	EV	EV	Nominal range	
	4 mA	OS	OS		
	0 mA			Underloading	

1) EV: User full scale value, OS: User scale offset

Output range UR20-2AO-UI-ISO-16-DIAG

Output range	Voltage (U)	Decimal (D)	Hexadecimal	Range	Conversion[1)]
0 ... 10 V User scale	12 V			Overloading	D = (EV - OS) x U / 10 V + OS U = (D - OS) / (EV - OS) x 10 V
	10 V	EV	EV	Nominal range	
	0 V	OS	OS		
	0 V			Underloading	
±10 V User scale	12 V			Overloading	D = (EV - OS) x U / 10 V + OS U = (D - OS) / (EV - OS) x 10 V
	10 V	EV	EV	Nominal range	
	0 V	OS	OS		
	-10 V	2 x OS - EV	2 x OS - EV		
	-12 V			Underloading	
2 ... 10 V User scale	12 V			Overloading	D = (EV - OS) x (U - 2 V) / 8 V + OS U = (D - OS) / (EV - OS) x 8 V + 2 V
	10 V	EV	EV	Nominal range	
	2 V	OS	OS		
	0 V			Underloading	
1 ... 5 V User scale	6 V			Overloading	D = (EV - OS) x (U - 1V) / 4 V + OS U= (D - OS) / (EV - OS) x 4 V + 1 V
	5 V	EV	EV	Nominal range	
	1 V	OS	OS		
	0 V			Underloading	
0 ... 5 V User scale	6 V			Overloading	D = (EV - OS) x U / 5 V + OS U = (D - OS) / (EV - OS) x 5 V
	5 V	EV	EV	Nominal range	
	0 V	OS	OS		
	0 V				
±5 V User scale	6 V			Overloading	D = (EV - OS) x U / 5 V + OS U = (D - OS) / (EV - OS) x 5 V
	5 V	EV	EV	Nominal range	
	0 V	OS	OS		
	-5 V	2 x OS - EV	2 x OS - EV		
	-6 V			Underloading	

1) EV: User full scale value, OS: User scale offset

6.69 Analogue output module UR20-4AO-UI-16

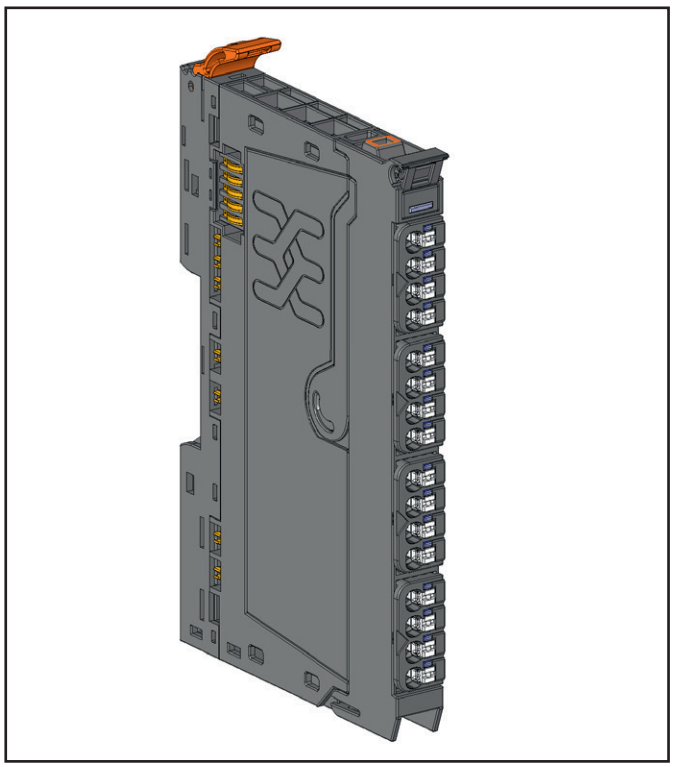

Analogue output module UR20-4AO-UI-16 (Item No. 1315680000)

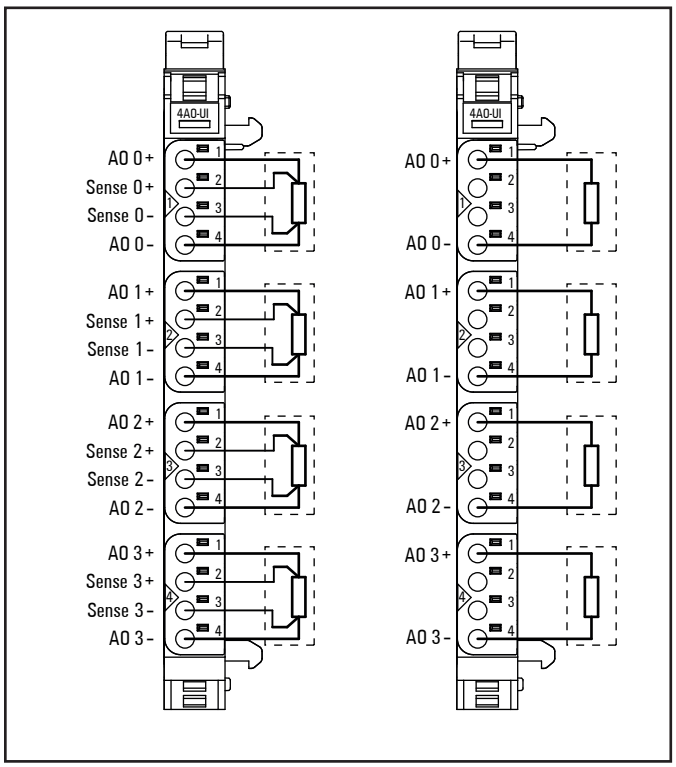

Connection diagram UR20-4AO-UI-16

The analogue output module UR20-4AO-UI-16 can control up to 4 analogue actuators with ±10 V, ±5 V, 0 ... 10 V, 0 ... 5 V, 2 ... 10 V, 1 ... 5 V, 0 ... 20 mA or 4 ... 20 mA. The resolution is 16 bit per channel. An actuator can be connected to each connector in a 2-wire or 4-wire connection, the internal switching is carried out automatically. The output range is defined using parameterisation. A status LED is assigned to each channel. The outputs are supplied with power from the output current path I_{OUT}. The outputs are decoupled from the system bus I_{SYS}, but there is no potential isolation to the output current path I_{OUT}.

ATTENTION

The module can be destroyed!

Connections AO 0–, AO 1–, AO 2– and AO 3– are connected to the supply potential (GND OUT).

► Realise the wiring in such a way that no compensation current will flow through the module.

Please regard the following notes when wiring, to avoid perturbation effects and to ensure proper function of the module.

► Use shielded analogue lines only and earth them on both ends. In case of potential differences between the ends, you should earth one end only.

► Always use shielded twisted pair lines when connecting the actuators.

► Shielding: Apply the cable schield to the functional earth directly on entering the cabinet; on applications without cabinet apply it to a shield bus.

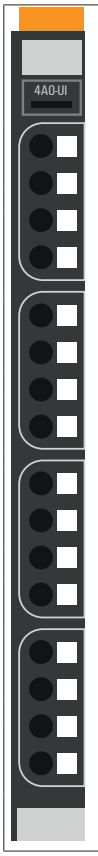

	Module status LED Green: Communication over the system bus Red: Error
1.1	Red: Channel 0 at voltage output: overload or short circuit, at current output: shunt resistance too high or line break detected
2.1	Red: Channel 1 at voltage output: overload or short circuit, at current output: shunt resistance too high or line break detected
3.1	Red: Channel 2 at voltage output: overload or short circuit, at current output: shunt resistance too high or line break detected
4.1	Red: Channel 3 at voltage output: overload or short circuit, at current output: shunt resistance too high or line break detected

LED indicators UR20-4AO-UI-16, troubleshooting see Chapter 12

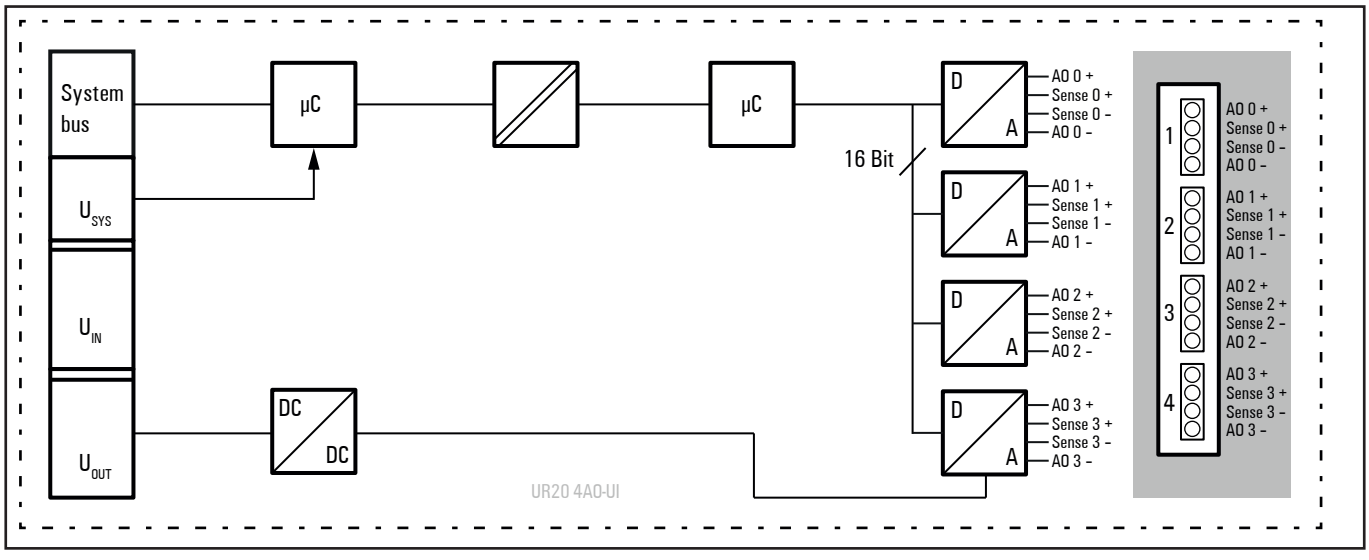

Block diagram UR20-4AO-UI-16

Technical data UR20-4AO-UI-16 (Item No. 1315680000)

System data		
Data	Process, parameter and diagnostic data depend on the coupler used, see coupler description.	
Interface	u-remote system bus	
System bus transfer rate	48 Mbps	
Potential isolation	Channel/system bus	yes
	Channel/channel	no
Outputs		
Number	4	
Output levels	1. Voltage (0 ... 5 V, ±5 V, 0 ... 10 V, ±10 V, 1 ... 5 V, 2 ... 10 V) 2. Current (0 ... 20 mA, 4 ... 20 mA)	
Response time	1 ms for 4 channels	
Resolution	16 bits	
Accuracy	0.1 % FSR max., 0.05 % FSR typ.	
Temperature coefficient	30 ppm/K	
Max. error between T_{min} and T_{max}	± 0,24 % FSR	
Monotony	yes	
Crosstalk between the channels	±0.001 % FSR max.	
Repeat accuracy	< ±1 mV eff.	
Voltage load resistance	≥ 1 kΩ (at > 50 °C ambient temperature: max. 25 mA total sensor current)	
Current load resistance	≤ 600 Ω	
Actuator connection	Automatic detection: 2-wire (current and voltage) or 4-wire (voltage)	
Short-circuit-proof	yes	
Module diagnosis	yes	
Individual channel diagnosis	no	
Substitute value	yes	
Can be used with PF-O-xDI-SIL	yes	
Supply		
Supply voltage	24 V DC +20 %/-15 %	
Current consumption from system current path I_{SYS}	8 mA	
Current consumption from output current path I_{OUT}	110 mA	
General data		
Weight (operational status)	83 g	
For additional general data, see Section 3.4		

Overview of the editable parameters UR20-4AO-UI-16

Channel	Description	Options[1)]	Default
0 ... 3	Data format	S5 Data format (0) / S7 Data format (1)	S7 Data format
0 ... 3	Output range	0 to 20 mA (0) / 4 to 20 mA (1) / 0 to 10 V (2) / -10 to 10 V (3) / 0 to 5 V (4) / -5 to 5 V (5) / 1 to 5 V (6) / 2 to 10 V (7) /disabled (8)	disabled
0 ... 3	Substitute value	depending on the channels data format (S5/S7), see Table "Output range"	0

1) Values in brackets for Modbus-TCP (firmware version 02.00.00 and higher), CANopen, EtherCAT and EtherNet/IP via module parameter class

Diagnostic data UR20-4AO-UI-16

Name	Bytes	Bit	Description	Default
Error indicator	0	0	Module error	
		1	Internal error	
		2	External error	
		3	Channel error	0
		4	Error	
		5	Reserved	0
		6	Reserved	0
		7	Parameter error	
Module typ	1	0	Module Type	0x05
		1		
		2		
		3		
		4	Reserved	0
		5	Reserved	0
		6	Reserved	0
		7	Reserved	0
Error byte 2	2	0 ... 7	Reserved	0
Error byte 3	3	0 ... 2	Reserved	0
		3	Internal diagnostic FIFO full	
		4	Power supply fault	
		5	Reserved	0
		6	Reserved	0
		7	Reserved	0
Channel type	4	0 ... 6	Channel type	0x73
		7	Reserved	0
Diagnostic bits per channel	5		Number of diagnostic bit per channel	0
Number of channels	6		Number of similar channels per module	4
Channel error	7 ... 10	0 ... 31	Reserved	0
Channel 0 error to Channel 31 error	11 ... 42	0 ... 7	Reserved	0
Time stamp	43-46		time stamp [µs] (32bit)	

Process data[1)] outputs UR20-4AO-UI-16

Byte	Format	Description
QB0	Word	AO0
QB1		
QB2	Word	AO1
QB3		
QB4	Word	AO2
QB5		
QB6	Word	AO3
QB7		

1) Internal process data mapping with data format "Standard". Depending on the fieldbus specification and the data format of the communicating fieldbus components the bytes and/or words can be reversed during data transfer.

Output range[1] UR20-4AO-UI-16

Output range	Current (I) / Voltage (U)	Decimal (D)	Hexadecimal	Range	Conversion
0 – 20 mA Siemens S7 format	23.52 mA	32511	0x7EFF	Overloading	D = 27648 x I / 20 I = D x 20 / 27648
	20 mA	27648	0x6C00	Nominal range	
	10 mA	13824	0x3600		
	0 mA	0	0x0000		
0 – 20 mA Siemens S5 format	23.52 mA	19268	0x4B44	Overloading	D = 16384 x I / 20 I = D x 20 / 16384
	20 mA	16384	0x4000	Nominal range	
	10 mA	8192	0x2000		
	0 mA	0	0x0000		
4 – 20 mA Siemens S7 format	22.81 mA	32511	0x7EFF	Overloading	D = 27648 x (I – 4) / 16 I= D x 16 / 27648 + 4
	20 mA	27648	0x6C00	Nominal range	
	12 mA	13824	0x3600		
	4 mA	0	0x0000		
	1.19 mA	-4864	0xED00	Underloading	
4 – 20 mA Siemens S5 format	22.82 mA	19268	0x4B44	Overloading	D = 27648 x (I – 4) / 16 I = D x 16 / 16384 + 4
	20 mA	16384	0x4000	Nominal range	
	12 mA	8192	0x2000		
	4 mA	0	0x0000		
	0.8 mA	-3277	0xF333	Underloading	
0 – 10 V Siemens S7 format	11.76 V	32511	0x7EFF	Overloading	D = 27648 x U/10 U = D x 10 / 27648
	10 V	27648	0x6C00	Nominal range	
	5 V	13824	0x3600		
	0 V	0	0x0000		
0 – 10 V Siemens S5 format	11.76 V	19268	0x4B44	Overloading	D = 16384 x U / 10 U = D x 10 / 16384
	10 V	16384	0x4000	Nominal range	
	5 V	8192	0x2000		
	0 V	0	0x0000		

1) If the process value is beyond the valid output range, the corresponding channel releases 0 V and 0 mA respectively.

Output range[1] UR20-4AO-UI-16

Output range	Current (I) / Voltage (U)	Decimal (D)	Hexadecimal	Range	Conversion
±10 V Siemens S7 format	11.76 V	32511	0x7EFF	Overloading	D = 27648 x U / 10 U = D x 10 / 27648
	10 V	27648	0x6C00	Nominal range	
	5 V	13824	0x3600		
	0 V	0	0x0000		
	-5 V	-13824	0xCA00		
	-10 V	-27648	0x9400		
	-11.76 V	-32512	0x8100	Underloading	
±10 V Siemens S5 format	11,76 V	19268	0x4B44	Overloading	D = 16384 x U / 10 U = D x 10 / 16384
	10 V	16384	0x4000	Nominal range	
	5 V	8192	0x2000		
	0 V	0	0x0000		
	-5 V	-8192	0xE000		
	-10 V	-16384	0xC000		
	-11,76 V	-19268	0xB4BC	Underloading	
2 ... 10 V Siemens S7 format	11,41 V	32511	0x7EFF	Overloading	D = 27648 x (U – 2) / 8 U = D x 8 / 27648 + 2
	10 V	27648	0x6C00	Nominal range	
	6 V	13824	0x3600		
	2 V	0	0x0000		
	0,59 V	-4864	0xED00	Underloading	
2 ... 10 V Siemens S5 format	11,41 V	19268	0x4B44	Overloading	D = 16384 x (U – 2) / 8 U = D x 8 / 16384 + 2
	10 V	16384	0x4000	Nominal range	
	6 V	8192	0x2000		
	2V	0	0x0000		
	0,40 V	-3277	0xF333	Underloading	
1 ... 5 V Siemens S7 format	5,7 V	32511	0x7EFF	Overloading	D = 27648 x (U – 1) / 4 U = D x 4 / 27648 + 1
	5 V	27648	0x6C00	Nominal range	
	3 V	13824	0x3600		
	1 V	0	0x0000		
	0,30 V	-4864	0xED00	Underloading	

1) If the process value is beyond the valid output range, the corresponding channel releases 0 V and 0 mA respectively.

Output range[1] UR20-4AO-UI-16

Output range	Current (I) / Voltage (U)	Decimal (D)	Hexadecimal	Range	Conversion
1 ... 5 V Siemens S5 format	5,7 V	19268	0x4B44	Overloading	D = 16384 x (U – 1) / 4 U = D x 4 / 16384 + 1
	5 V	16384	0x4000	Nominal range	
	3 V	8192	0x2000		
	1 V	0	0x0000		
	0,20 V	-3277	0xF333	Underloading	
0 ... 5 V Siemens S7 format	5,88 V	32511	0x7EFF	Overloading	D = 27648 x U / 5 U = D x 5 / 27648
	5 V	27648	0x6C00	Nominal range	
	2,5 V	13824	0x3600		
	0 V	0	0x0000		
0 ... 5 V Siemens S5 format	5,88 V	19268	0x4B44	Overloading	D = 16384 x U / 5 U = D x 5 / 16384
	5 V	16384	0x4000	Nominal range	
	2,5 V	8192	0x2000		
	0 V	0	0x0000		
±5 V Siemens S7 format	5,88 V	32511	0x7EFF	Overloading	D = 27648 x U / 5 U = D x 5 / 27648
	5 V	27648	0x6C00	Nominal range	
	2,5	13824	0x3600		
	0 V	0	0x0000		
	-2,5 V	-13824	0xCA00		
	-5 V	-27648	0x9400		
	-5,88 V	-32512	0x8100	Underloading	
±5 V Siemens S5 format	5,88 V	19268	0x4B44	Overloading	D = 16384 x U / 5 U = D x 5 / 16384
	5 V	16384	0x4000	Nominal range	
	2,5	8192	0x2000		
	0 V	0	0x0000		
	-2,5 V	-8192	0xE000		
	-5 V	-16384	0xC000		
	-5,88 V	-19268	0xB4BC	Underloading	

1) If the process value is beyond the valid output range, the corresponding channel releases 0 V and 0 mA respectively.

The following applies for all S5 and S7 ranges:
value > overload range = output deactivated
value < underload range = output deactivated

6.70 Analogue output module UR20-4AO-UI-16-M

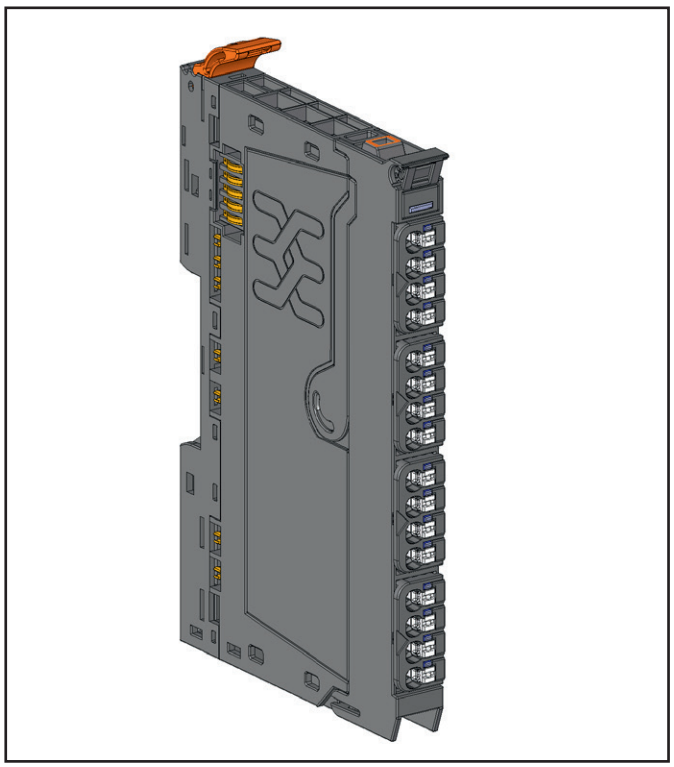

Analogue output module UR20-4AO-UI-16-M (Item No. 2453880000)

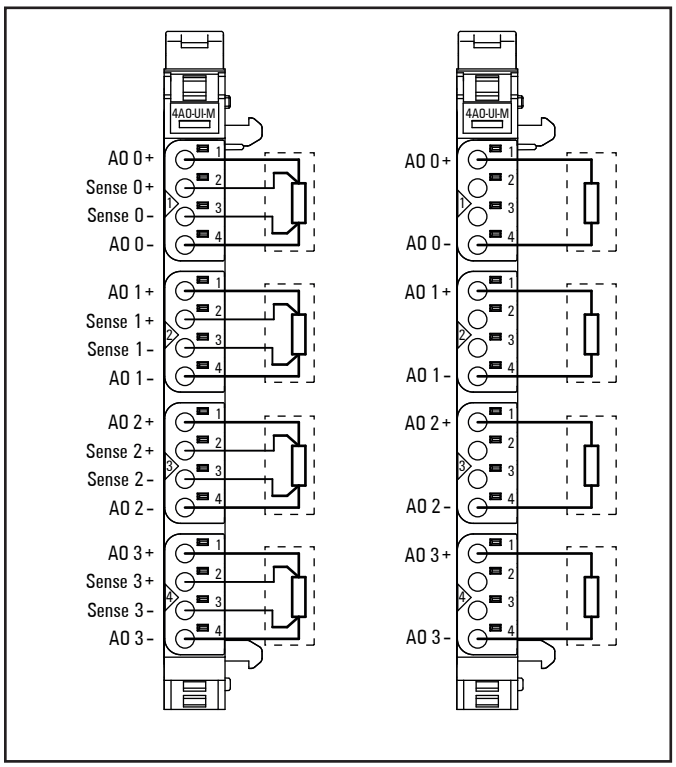

Connection diagram UR20-4AO-UI-16-M

The analogue output module UR20-4AO-UI-16-M can control up to 4 analogue actuators with ±10 V, ±5 V, 0 ... 10 V, 0 ... 5 V, 2 ... 10 V, 1 ... 5 V, 0 ... 20 mA or 4 ... 20 mA. The resolution is 16 bit per channel. An actuator can be connected to each connector in a 2-wire or 4-wire connection, the internal switching is carried out automatically. The output range is defined using parameterisation. A status LED is assigned to each channel. The outputs are supplied with power from the output current path I_{OUT}. The outputs are decoupled from the system bus I_{SYS}, but there is no potential isolation to the output current path I_{OUT}.

The module is approved for the usage in industrial applications as well as maritime and offshore applications.

ATTENTION

The module can be destroyed!

Connections AO 0–, AO 1–, AO 2– and AO 3– are connected to the supply potential (GND OUT).

► Realise the wiring in such a way that no compensation current will flow through the module.

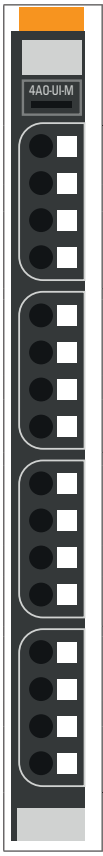

	Module status LED Green: Communication over the system bus Red: Error
1.1	Red: Channel 0 at voltage output: overload or short circuit, at current output: shunt resistance too high or line break detected
2.1	Red: Channel 1 at voltage output: overload or short circuit, at current output: shunt resistance too high or line break detected
3.1	Red: Channel 2 at voltage output: overload or short circuit, at current output: shunt resistance too high or line break detected
4.1	Red: Channel 3 at voltage output: overload or short circuit, at current output: shunt resistance too high or line break detected

LED indicators UR20-4AO-UI-16-M, troubleshooting see Chapter 12

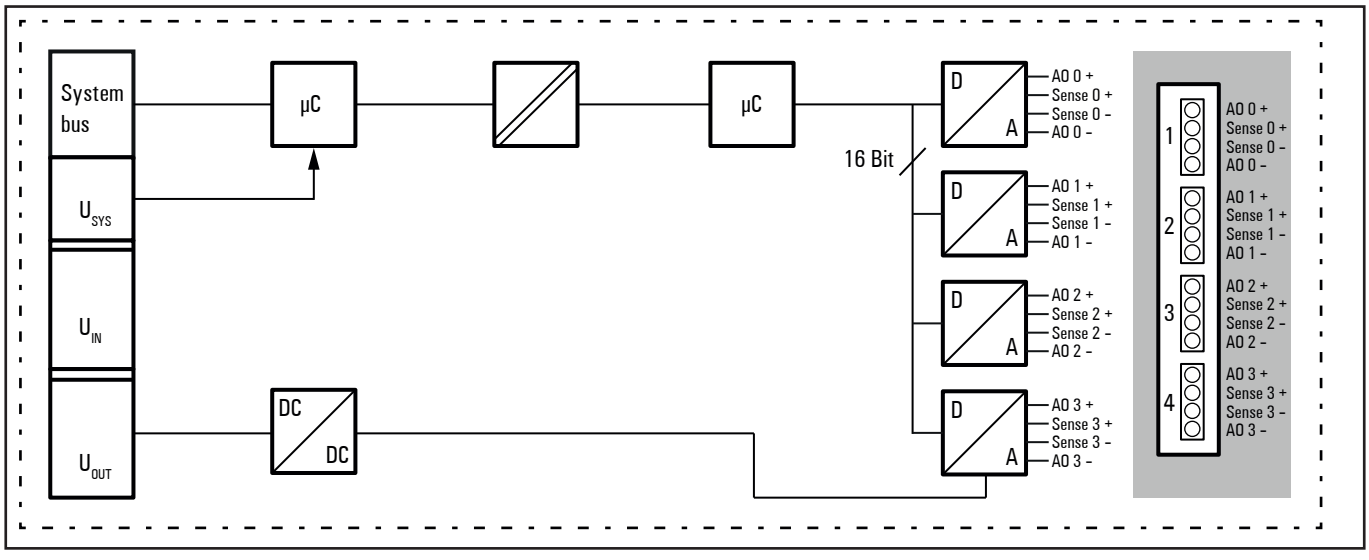

Block diagram UR20-4AO-UI-16-M

Technical data UR20-4AO-UI-16-M (Item No. 2453880000)

System data		
Data	Process, parameter and diagnostic data depend on the coupler used, see coupler description.	
Interface	u-remote system bus	
System bus transfer rate	48 Mbps	
Potential isolation	Channel/system bus	yes
	Channel/channel	no
Outputs		
Number	4	
Output levels	1. Voltage (0 ... 5 V, ±5 V, 0 ... 10 V, ±10 V, 1 ... 5 V, 2 ... 10 V) 2. Current (0 ... 20 mA, 4 ... 20 mA)	
Response time	1 ms for 4 channels	
Resolution	16 bits	
Accuracy	0.1 % FSR max., 0.05 % FSR typ.	
Temperature coefficient	30 ppm/K	
Max. error between T_{min} and T_{max}	± 0,24 % FSR	
Monotony	yes	
Crosstalk between the channels	±0.001 % FSR max.	
Repeat accuracy	< ±1 mV eff.	
Voltage load resistance	≥ 1 kΩ	
Current load resistance	≤ 600 Ω	
Actuator connection	Automatic detection: 2-wire (current and voltage) or 4-wire (voltage)	
Short-circuit-proof	yes	
Module diagnosis	yes	
Individual channel diagnosis	no	
Substitute value	yes	
Can be used with PF-O-xDI-SIL	no	
Supply		
Supply voltage	24 V DC +20 %/-15 %	
Current consumption from system current path I_{SYS}	8 mA	
Current consumption from output current path I_{OUT}	92 mA	
General data		
Weight (operational status)	94 g	
For additional general data, see Section 3.4		

Overview of the editable parameters UR20-4AO-UI-16-M

Channel	Description	Options[1)]	Default
0 ... 3	Data format	S5 Data format (0) / S7 Data format (1)	S7 Data format
0 ... 3	Output range	0 to 20 mA (0) / 4 to 20 mA (1) / 0 to 10 V (2) / -10 to 10 V (3) / 0 to 5 V (4) / -5 to 5 V (5) / 1 to 5 V (6) / 2 to 10 V (7) /disabled (8)	disabled
0 ... 3	Substitute value	depending on the channels data format (S5/S7), see Table "Output range"	0

1) Values in brackets for Modbus-TCP (firmware version 02.00.00 and higher), CANopen, EtherCAT and EtherNet/IP via module parameter class

Diagnostic data UR20-4AO-UI-16-M

Name	Bytes	Bit	Description	Default
Error indicator	0	0	Module error	
		1	Internal error	
		2	External error	
		3	Channel error	0
		4	Error	
		5	Reserved	0
		6	Reserved	0
		7	Parameter error	
Module typ	1	0	Module Type	0x05
		1		
		2		
		3		
		4	Reserved	0
		5	Reserved	0
		6	Reserved	0
		7	Reserved	0
Error byte 2	2	0 ... 7	Reserved	0
Error byte 3	3	0 ... 2	Reserved	0
		3	Internal diagnostic FIFO full	
		4	Power supply fault	
		5	Reserved	0
		6	Reserved	0
		7	Reserved	0
Channel type	4	0 ... 6	Channel type	0x73
		7	Reserved	0
Diagnostic bits per channel	5		Number of diagnostic bit per channel	0
Number of channels	6		Number of similar channels per module	4
Channel error	7 ... 10	0 ... 31	Reserved	0
Channel 0 error to Channel 31 error	11 ... 42	0 ... 7	Reserved	0
Time stamp	43-46		time stamp [µs] (32bit)	

Process data[1)] outputs UR20-4AO-UI-16-M

Byte	Format	Description
QB0	Word	AO0
QB1		
QB2	Word	AO1
QB3		
QB4	Word	AO2
QB5		
QB6	Word	AO3
QB7		

1) Internal process data mapping with data format "Standard". Depending on the fieldbus specification and the data format of the communicating fieldbus components the bytes and/or words can be reversed during data transfer.

Output range[1] UR20-4AO-UI-16-M

Output range	Current (I) / Voltage (U)	Decimal (D)	Hexadecimal	Range	Conversion
0 – 20 mA Siemens S7 format	23.52 mA	32511	0x7EFF	Overloading	D = 27648 x I / 20 I = D x 20 / 27648
	20 mA	27648	0x6C00	Nominal range	
	10 mA	13824	0x3600		
	0 mA	0	0x0000		
0 – 20 mA Siemens S5 format	23.52 mA	19268	0x4B44	Overloading	D = 16384 x I / 20 I = D x 20 / 16384
	20 mA	16384	0x4000	Nominal range	
	10 mA	8192	0x2000		
	0 mA	0	0x0000		
4 – 20 mA Siemens S7 format	22.81 mA	32511	0x7EFF	Overloading	D = 27648 x (I – 4) / 16 I= D x 16 / 27648 + 4
	20 mA	27648	0x6C00	Nominal range	
	12 mA	13824	0x3600		
	4 mA	0	0x0000		
	1.19 mA	-4864	0xED00	Underloading	
4 – 20 mA Siemens S5 format	22.82 mA	19268	0x4B44	Overloading	D = 27648 x (I – 4) / 16 I = D x 16 / 16384 + 4
	20 mA	16384	0x4000	Nominal range	
	12 mA	8192	0x2000		
	4 mA	0	0x0000		
	0.8 mA	-3277	0xF333	Underloading	
0 – 10 V Siemens S7 format	11.76 V	32511	0x7EFF	Overloading	D = 27648 x U/10 U = D x 10 / 27648
	10 V	27648	0x6C00	Nominal range	
	5 V	13824	0x3600		
	0 V	0	0x0000		
0 – 10 V Siemens S5 format	11.76 V	19268	0x4B44	Overloading	D = 16384 x U / 10 U = D x 10 / 16384
	10 V	16384	0x4000	Nominal range	
	5 V	8192	0x2000		
	0 V	0	0x0000		

1) If the process value is beyond the valid output range, the corresponding channel releases 0 V and 0 mA respectively.

Output range[1] UR20-4AO-UI-16-M

Output range	Current (I) / Voltage (U)	Decimal (D)	Hexadecimal	Range	Conversion
±10 V Siemens S7 format	11.76 V	32511	0x7EFF	Overloading	D = 27648 x U / 10 U = D x 10 / 27648
	10 V	27648	0x6C00	Nominal range	
	5 V	13824	0x3600		
	0 V	0	0x0000		
	-5 V	-13824	0xCA00		
	-10 V	-27648	0x9400		
	-11.76 V	-32512	0x8100	Underloading	
±10 V Siemens S5 format	11,76 V	19268	0x4B44	Overloading	D = 16384 x U / 10 U = D x 10 / 16384
	10 V	16384	0x4000	Nominal range	
	5 V	8192	0x2000		
	0 V	0	0x0000		
	-5 V	-8192	0xE000		
	-10 V	-16384	0xC000		
	-11,76 V	-19268	0xB4BC	Underloading	
2 ... 10 V Siemens S7 format	11,41 V	32511	0x7EFF	Overloading	D = 27648 x (U – 2) / 8 U = D x 8 / 27648 + 2
	10 V	27648	0x6C00	Nominal range	
	6 V	13824	0x3600		
	2 V	0	0x0000		
	0,59 V	-4864	0xED00	Underloading	
2 ... 10 V Siemens S5 format	11,41 V	19268	0x4B44	Overloading	D = 16384 x (U – 2) / 8 U = D x 8 / 16384 + 2
	10 V	16384	0x4000	Nominal range	
	6 V	8192	0x2000		
	2V	0	0x0000		
	0,40 V	-3277	0xF333	Underloading	
1 ... 5 V Siemens S7 format	5,7 V	32511	0x7EFF	Overloading	D = 27648 x (U – 1) / 4 U = D x 4 / 27648 + 1
	5 V	27648	0x6C00	Nominal range	
	3 V	13824	0x3600		
	1 V	0	0x0000		
	0,30 V	-4864	0xED00	Underloading	

1) If the process value is beyond the valid output range, the corresponding channel releases 0 V and 0 mA respectively.

Output range[1] UR20-4AO-UI-16-M

Output range	Current (I) / Voltage (U)	Decimal (D)	Hexadecimal	Range	Conversion
1 ... 5 V Siemens S5 format	5,7 V	19268	0x4B44	Overloading	D = 16384 x (U – 1) / 4 U = D x 4 / 16384 + 1
	5 V	16384	0x4000	Nominal range	
	3 V	8192	0x2000		
	1 V	0	0x0000		
	0,20 V	-3277	0xF333	Underloading	
0 ... 5 V Siemens S7 format	5,88 V	32511	0x7EFF	Overloading	D = 27648 x U / 5 U = D x 5 / 27648
	5 V	27648	0x6C00	Nominal range	
	2,5 V	13824	0x3600		
	0 V	0	0x0000		
0 ... 5 V Siemens S5 format	5,88 V	19268	0x4B44	Overloading	D = 16384 x U / 5 U = D x 5 / 16384
	5 V	16384	0x4000	Nominal range	
	2,5 V	8192	0x2000		
	0 V	0	0x0000		
±5 V Siemens S7 format	5,88 V	32511	0x7EFF	Overloading	D = 27648 x U / 5 U = D x 5 / 27648
	5 V	27648	0x6C00	Nominal range	
	2,5	13824	0x3600		
	0 V	0	0x0000		
	-2,5 V	-13824	0xCA00		
	-5 V	-27648	0x9400		
	-5,88 V	-32512	0x8100	Underloading	
±5 V Siemens S5 format	5,88 V	19268	0x4B44	Overloading	D = 16384 x U / 5 U = D x 5 / 16384
	5 V	16384	0x4000	Nominal range	
	2,5	8192	0x2000		
	0 V	0	0x0000		
	-2,5 V	-8192	0xE000		
	-5 V	-16384	0xC000		
	-5,88 V	-19268	0xB4BC	Underloading	

1) If the process value is beyond the valid output range, the corresponding channel releases 0 V and 0 mA respectively.

The following applies for all S5 and S7 ranges:
value > overload range = output deactivated
value < underload range = output deactivated

6.71 Analogue output module UR20-4AO-UI-16-DIAG

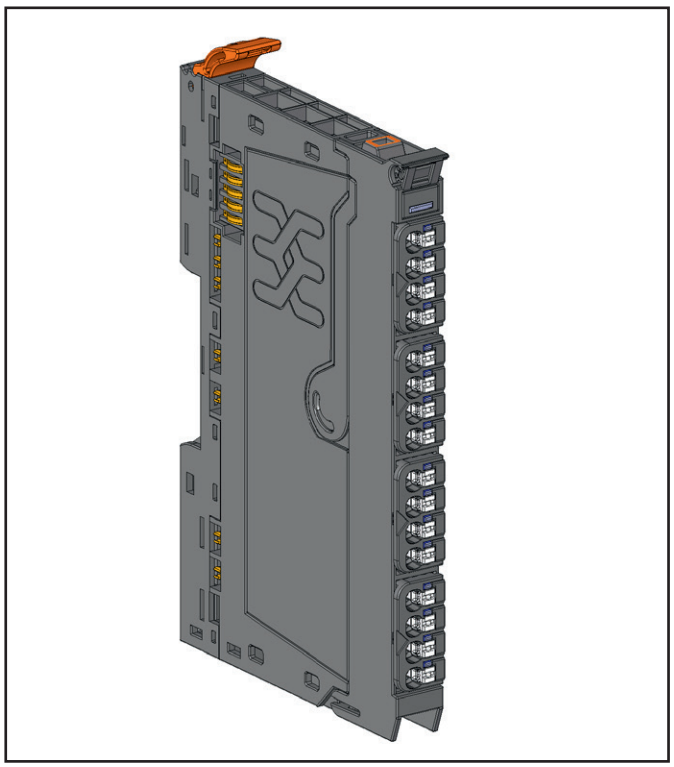

Analogue output module UR20-4AO-UI-16-DIAG (Item No. 1315730000)

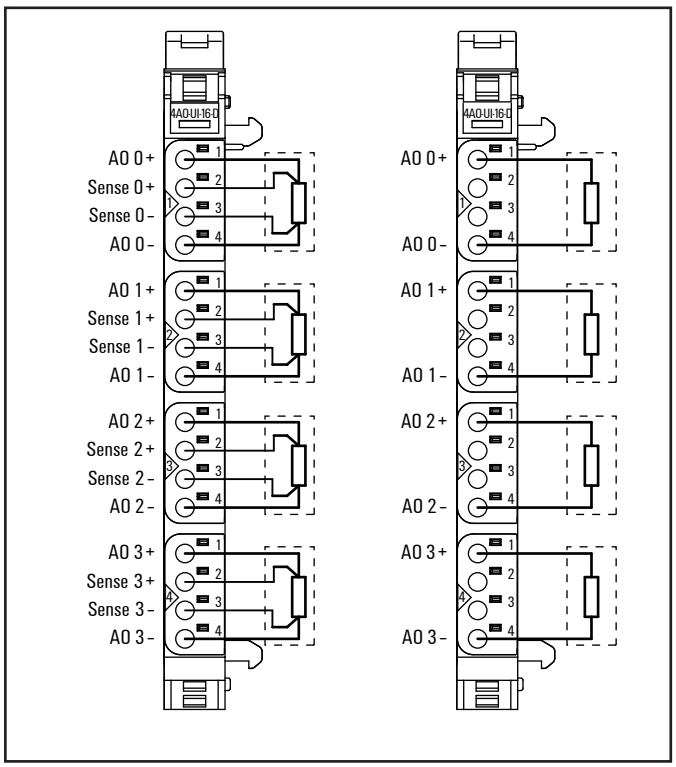

Connection diagram UR20-4AO-UI-16-DIAG

The analogue output module UR20-4AO-UI-16-DIAG can control up to 4 analogue actuators with ±10 V, ±5 V, 0 ... 10 V, 0 ... 5 V, 2 ... 10 V, 1 ... 5 V, 0 ... 20 mA or 4 ... 20 mA. The resolution is 16 bit per channel. An actuator can be connected to each connector in a 2-wire or 4-wire connection, the internal switching is carried out automatically. The output range is defined using parameterisation. A status LED is assigned to each channel. The outputs are supplied with power from the output current path (I_{OUT}). The outputs are decoupled from the system bus I_{SYS}, but there is no potential isolation to the output current path I_{OUT}.

The module provides individual channel diagnosis with channel related error messages.

ATTENTION

The module can be destroyed!

Connections AO 0–, AO 1–, AO 2– and AO 3– are connected to the supply potential (GND OUT).

► Realise the wiring in such a way that no compensation current will flow through the module.

Please regard the following notes when wiring, to avoid perturbation effects and to ensure proper function of the module.

► Use shielded analogue lines only and earth them on both ends. In case of potential differences between the ends, you should earth one end only.

► Always use shielded twisted pair lines when connecting the actuators.

► Shielding: Apply the cable schield to the functional earth directly on entering the cabinet; on applications without cabinet apply it to a shield bus.



	Module status LED Green: Communication over the system bus Red: Error
1.2	Red: Channel 0 at voltage output: overload or short circuit, at current output: shunt resistance too high or line break detected
2.2	Red: Channel 1 at voltage output: overload or short circuit, at current output: shunt resistance too high or line break detected
3.2	Red: Channel 2 at voltage output: overload or short circuit, at current output: shunt resistance too high or line break detected
4.2	Red: Channel 3 at voltage output: overload or short circuit, at current output: shunt resistance too high or line break detected

LED indicators UR20-4AO-UI-16-DIAG, troubleshooting see Chapter 12

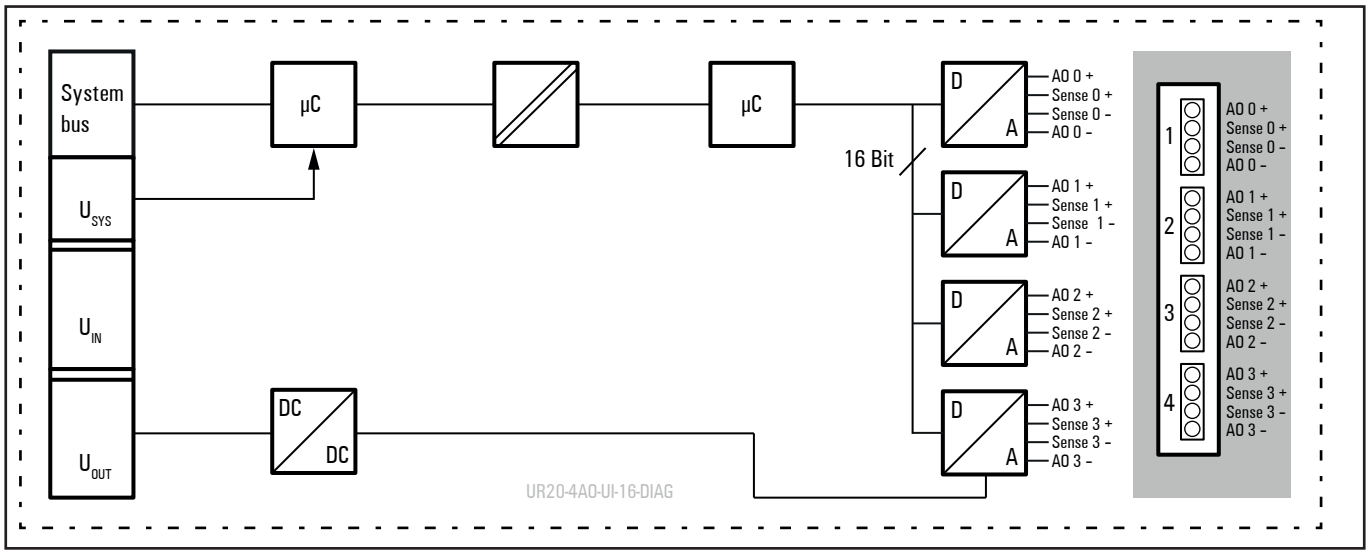

Block diagram UR20-4AO-UI-16-DIAG

Technical data UR20-4AO-UI-16-DIAG (Item No. 1315730000)

System data		
Data	Process, parameter and diagnostic data depend on the coupler used, see coupler description.	
Interface	u-remote system bus	
System bus transfer rate	48 Mbps	
Potential isolation	Channel/system bus	yes
	Channel/channel	no
Outputs		
Number	4	
Output levels	1. Voltage (0 ... 5 V, ±5 V, 0 ... 10 V, ±10 V, 1 ... 5 V, 2 ... 10 V) 2. Current (0 ... 20 mA, 4 ... 20 mA)	
Response time	1 ms for 4 channels	
Resolution	16 bits	
Accuracy	0.1 % FSR max., 0.05 % FSR typ.	
Temperature coefficient	30 ppm/K	
Max. error between T_{min} and T_{max}	±0,24 % FSR	
Monotony	yes	
Crosstalk between the channels	±0.001 % FSR max.	
Repeat accuracy	< ±1 mV eff.	
Voltage load resistance	≥ 1 kΩ (at > 50 °C ambient temperature: max. 25 mA total sensor current)	
Current load resistance	≤ 600 Ω	
Actuator connection	Automatic detection: 2-wire (current and voltage) or 4-wire (voltage)	
Short-circuit-proof	yes	
Module diagnosis	yes	
Individual channel diagnosis	yes	
Substitute value	yes	
Can be used with PF-O-xDI-SIL	yes	
Supply		
Supply voltage	24 V DC +20 %/-15 %	
Current consumption from system current path I_{SYS}	8 mA	
Current consumption from output current path I_{OUT}	110 mA	
General data		
Weight (operational status)	98 g	
For additional general data, see Section 3.4		

Overview of the editable parameters UR20-4AO-UI-16-DIAG

Channel	Description	Options[1)]	Default
0 ... 3	Data format	S5 Data format (0) / S7 Data format (1)	S7 Data format
0 ... 3	Output range	0 to 20 mA (0) / 4 to 20 mA (1) / 0 to 10 V (2) / -10 to 10 V (3) / 0 to 5 V (4) / -5 to 5 V (5) / 1 to 5 V (6) / 2 to 10 V (7) /disabled (8)	disabled
0 ... 3	Substitute value	depending on the channels data format (S5/S7), see Table "Output range"	0
0 ... 3	Channel diagnosis	disabled (0) / enabled (1)	disabled

1) Values in brackets for Modbus-TCP (firmware version 02.00.00 and higher), CANopen, EtherCAT and EtherNet/IP via module parameter class

Diagnostic data UR20-4AO-UI-16-DIAG

Name	Bytes	Bit	Description	Default
Error indicator	0	0	Module error	
		1	Internal error	
		2	External error	
		3	Channel error	
		4	Reserved	0
		5	Power supply fault	
		6	Reserved	0
		7	Parameter error	
Module type	1	0	Module Type	0x05
		1		
		2		
		3		
		4	Channel information available	1
		5 - 7	Reserved	0
Error byte 2	2	0 - 7	Reserved	0
Error byte 3	3	0 - 2	Reserved	0
		3	Internal diagnostic FIFO full	
		4	Power supply fault	
		5	Reserved	0
		6	Process alarm lost	
		7	Reserved	0
Channel type	4	0 - 6	Channel type	0x73
		7	Reserved	0
Diagnostic bits per channel	5		Number of diagnostic bit per channel	8
Number of channels	6		Number of similar channels per module	4
Channel error	7	0	Error at channel 0	
		1	Error at channel 1	
		2	Error at channel 2	
		3	Error at channel 3	
		4 ... 7	Reserved	0
	8 ... 10	0 ... 31	Reserved	0
Error Channel 0	11	0	Parameter Error	
		1	Overtemperature	
		2	Overload	
		3	Error	
		4	Line break	
		5 ... 7	Reserved	0
Error Channel 1	12	0	Parameter Error	
		1	Overtemperature	
		2	Overload	
		3	Error	
		4	Line break	
		5 ... 7	Reserved	0

Diagnostic data UR20-4AO-UI-16-DIAG

Name	Bytes	Bit	Description	Default
Error Channel 2	13	0	Parameter Error	
		1	Overtemperature	
		2	Overload	
		3	Error	
		4	Line break	
		5 ... 7	Reserved	0
Error Channel 3	14	0	Parameter Error	
		1	Overtemperature	
		2	Overload	
		3	Error	
		4	Line break	
		5 ... 7	Reserved	0
Channel 4 error to Channel 31 error	15 - 42	0 - 7	Reserved	0
Time stamp	43 - 46		Time stamp [µs] (32 bit)	

Process data[1] outputs UR20-4AO-UI-16-DIAG

Byte	Format	Description
QB0	Word	AO0
QB1		
QB2	Word	AO1
QB3		
QB4	Word	AO2
QB5		
QB6	Word	AI03
QB7		

1) Internal process data mapping with data format “Standard”. Depending on the fieldbus specification and the data format of the communicating fieldbus components the bytes and/or words can be reversed during data transfer.

Output range[1] UR20-4AO-UI-16-DIAG

Output range	Current (I) / Voltage (U)	Decimal (D)	Hexadecimal	Range	Conversion
0 ... 20 mA Siemens S7 format	23.52 mA	32511	0x7EFF	Overloading	D = 27648 x I / 20 I = D x 20 / 27648
	20 mA	27648	0x6C00	Nominal range	
	10 mA	13824	0x3600		
	0 mA	0	0x0000		
0 ... 20 mA Siemens S5 format	23.52 mA	19268	0x4B44	Overloading	D = 16384 x I / 20 I = D x 20 / 16384
	20 mA	16384	0x4000	Nominal range	
	10 mA	8192	0x2000		
	0 mA	0	0x0000		
4 ... 20mA Siemens S7 format	22.81 mA	32511	0x7EFF	Overloading	D = 27648 x (I - 4) / 16 I= D x 16 / 27648 + 4
	20 mA	27648	0x6C00	Nominal range	
	12 mA	13824	0x3600		
	4 mA	0	0x0000		
	1.19 mA	-4864	0xED00	Underloading	
4 ... 20mA Siemens S5 format	22.82 mA	19268	0x4B44	Overloading	D = 27648 x (I - 4) / 16 I = D x 16 / 16384 + 4
	20 mA	16384	0x4000	Nominal range	
	12 mA	8192	0x2000		
	4 mA	0	0x0000		
	0.8 mA	-3277	0xF333	Underloading	
0 ... 10 V Siemens S7 format	11.76 V	32511	0x7EFF	Overloading	D = 27648 x U/10 U = D x 10 / 27648
	10 V	27648	0x6C00	Nominal range	
	5 V	13824	0x3600		
	0 V	0	0x0000		
0 ... 10 V Siemens S5 format	11.76 V	19268	0x4B44	Overloading	D = 16384 x U / 10 U = D x 10 / 16384
	10 V	16384	0x4000	Nominal range	
	5 V	8192	0x2000		
	0 V	0	0x0000		

1) If the process value is beyond the valid output range, the corresponding channel releases 0 V and 0 mA respectively.

Output range[1] UR20-4AO-UI-16-DIAG

Output range	Current (I) / Voltage (U)	Decimal (D)	Hexadecimal	Range	Conversion
±10 V Siemens S7 format	11.76 V	32511	0x7EFF	Overloading	D = 27648 x U / 10 U = D x 10 / 27648
	10 V	27648	0x6C00	Nominal range	
	5 V	13824	0x3600		
	0 V	0	0x0000		
	-5 V	-13824	0xCA00		
	-10 V	-27648	0x9400		
	-11.76 V	-32512	0x8100	Underloading	
±10 V Siemens S5 format	11,76 V	19268	0x4B44	Overloading	D = 16384 x U / 10 U = D x 10 / 16384
	10 V	16384	0x4000	Nominal range	
	5 V	8192	0x2000		
	0 V	0	0x0000		
	-5 V	-8192	0xE000		
	-10 V	-16384	0xC000		
	-11,76 V	-19268	0xB4BC	Underloading	
2 ... 10 V Siemens S7 format	11,41 V	32511	0x7EFF	Overloading	D = 27648 x (U – 2) / 8 U = D x 8 / 27648 + 2
	10 V	27648	0x6C00	Nominal range	
	6 V	13824	0x3600		
	2 V	0	0x0000		
	0,59 V	-4864	0xED00	Underloading	
2 ... 10 V Siemens S5 format	11,41 V	19268	0x4B44	Overloading	D = 16384 x (U – 2) / 8 U = D x 8 / 16384 + 2
	10 V	16384	0x4000	Nominal range	
	6 V	8192	0x2000		
	2V	0	0x0000		
	0,40 V	-3277	0xF333	Underloading	
1 ... 5 V Siemens S7 format	5,7 V	32511	0x7EFF	Overloading	D = 27648 x (U – 1) / 4 U = D x 4 / 27648 + 1
	5 V	27648	0x6C00	Nominal range	
	3 V	13824	0x3600		
	1 V	0	0x0000		
	0,30 V	-4864	0xED00	Underloading	

1) If the process value is beyond the valid output range, the corresponding channel releases 0 V and 0 mA respectively.

Output range[1] UR20-4AO-UI-16-DIAG

Output range	Current (I) / Voltage (U)	Decimal (D)	Hexadecimal	Range	Conversion
1 ... 5 V Siemens S5 format	5,7 V	19268	0x4B44	Overloading	D = 16384 x (U – 1) / 4 U = D x 4 / 16384 + 1
	5 V	16384	0x4000	Nominal range	
	3 V	8192	0x2000		
	1 V	0	0x0000		
	0,20 V	-3277	0xF333	Underloading	
0 ... 5 V Siemens S7 format	5,88 V	32511	0x7EFF	Overloading	D = 27648 x U / 5 U = D x 5 / 27648
	5 V	27648	0x6C00	Nominal range	
	2,5 V	13824	0x3600		
	0 V	0	0x0000		
0 ... 5 V Siemens S5 format	5,88 V	19268	0x4B44	Overloading	D = 16384 x U / 5 U = D x 5 / 16384
	5 V	16384	0x4000	Nominal range	
	2,5 V	8192	0x2000		
	0 V	0	0x0000		
±5 V Siemens S7 format	5,88 V	32511	0x7EFF	Overloading	D = 27648 x U / 5 U = D x 5 / 27648
	5 V	27648	0x6C00	Nominal range	
	2,5	13824	0x3600		
	0 V	0	0x0000		
	-2,5 V	-13824	0xCA00		
	-5 V	-27648	0x9400		
	-5,88 V	-32512	0x8100	Underloading	
±5 V Siemens S5 format	5,88 V	19268	0x4B44	Overloading	D = 16384 x U / 5 U = D x 5 / 16384
	5 V	16384	0x4000	Nominal range	
	2,5	8192	0x2000		
	0 V	0	0x0000		
	-2,5 V	-8192	0xE000		
	-5 V	-16384	0xC000		
	-5,88 V	-19268	0xB4BC	Underloading	

1) If the process value is beyond the valid output range, the corresponding channel releases 0 V and 0 mA respectively.

The following applies for all S5 and S7 ranges:
value > overload range = output deactivated
value < underload range = output deactivated

6.72 Analogue output module UR20-4AO-UI-16-M-DIAG

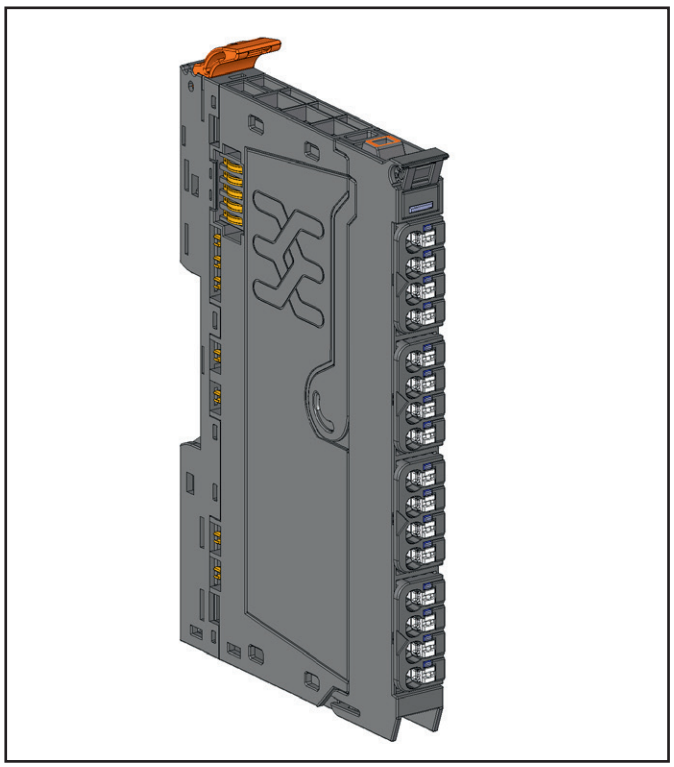

Analogue output module UR20-4AO-UI-16-M-DIAG (Item No. 2453870000)

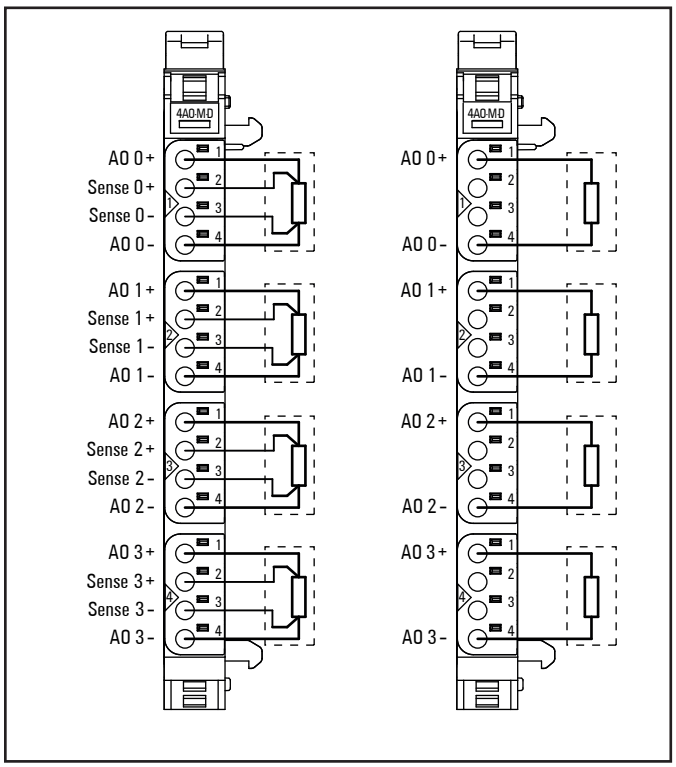

Connection diagram UR20-4AO-UI-16-M-DIAG

The analogue output module UR20-4AO-UI-16-M-DIAG can control up to 4 analogue actuators with ±10 V, ±5 V, 0 ... 10 V, 0 ... 5 V, 2 ... 10 V, 1 ... 5 V, 0 ... 20 mA or 4 ... 20 mA. The resolution is 16 bit per channel. An actuator can be connected to each connector in a 2-wire or 4-wire connection, the internal switching is carried out automatically. The output range is defined using parameterisation. A status LED is assigned to each channel. The outputs are supplied with power from the output current path (I_{OUT}). The outputs are decoupled from the system bus I_{SYS}, but there is no potential isolation to the output current path I_{OUT}.

The module provides individual channel diagnosis with channel related error messages.

The module is approved for the usage in industrial applications as well as maritime and offshore applications.

ATTENTION

The module can be destroyed!

Connections AO 0–, AO 1–, AO 2– and AO 3– are connected to the supply potential (GND OUT).

► Realise the wiring in such a way that no compensation current will flow through the module.



	Module status LED Green: Communication over the system bus Red: Error
1.2	Red: Channel 0 at voltage output: overload or short circuit, at current output: shunt resistance too high or line break detected
2.2	Red: Channel 1 at voltage output: overload or short circuit, at current output: shunt resistance too high or line break detected
3.2	Red: Channel 2 at voltage output: overload or short circuit, at current output: shunt resistance too high or line break detected
4.2	Red: Channel 3 at voltage output: overload or short circuit, at current output: shunt resistance too high or line break detected

LED indicators UR20-4AO-UI-16-M-DIAG, troubleshooting see Chapter 12

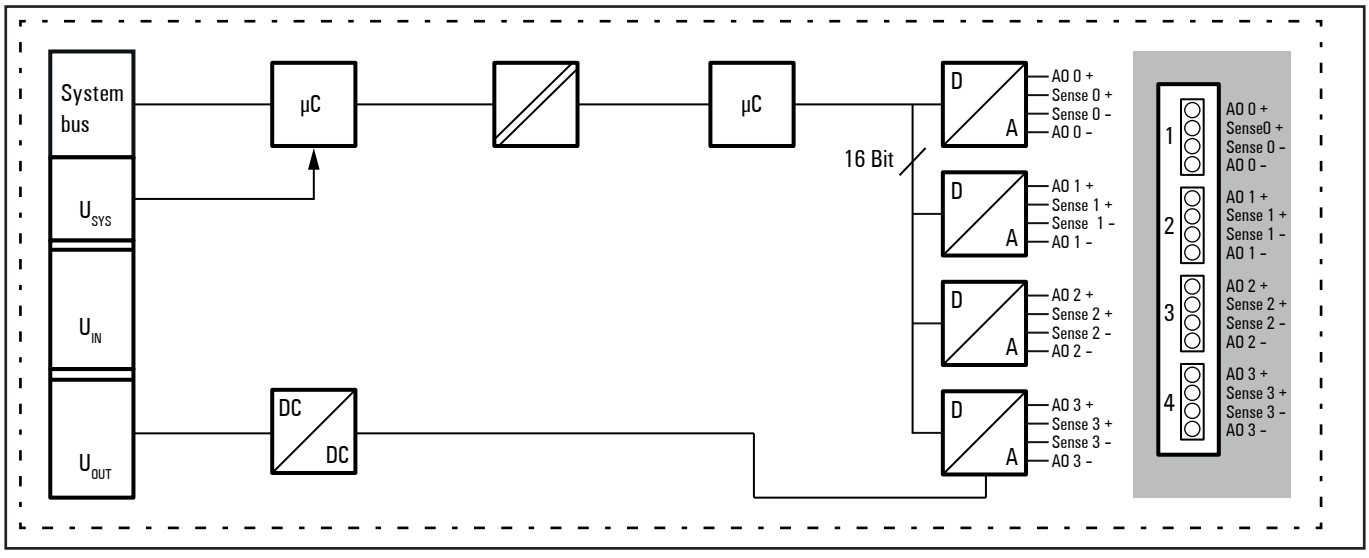

Block diagram UR20-4AO-UI-16-M-DIAG

Technical data UR20-4AO-UI-16-M-DIAG (Item No. 2453870000)

System data		
Data	Process, parameter and diagnostic data depend on the coupler used, see coupler description.	
Interface	u-remote system bus	
System bus transfer rate	48 Mbps	
Potential isolation	Channel/system bus	yes
	Channel/channel	no
Outputs		
Number	4	
Output levels	1. Voltage (0 ... 5 V, ±5 V, 0 ... 10 V, ±10 V, 1 ... 5 V, 2 ... 10 V) 2. Current (0 ... 20 mA, 4 ... 20 mA)	
Response time	1 ms for 4 channels	
Resolution	16 bits	
Accuracy	0.1 % FSR max., 0.05 % FSR typ.	
Temperature coefficient	30 ppm/K	
Max. error between T_{min} and T_{max}	± 0,24 % FSR	
Monotony	yes	
Crosstalk between the channels	±0.001 % FSR max.	
Repeat accuracy	< ±1 mV eff.	
Voltage load resistance	≥ 1 kΩ	
Current load resistance	≤ 600 Ω	
Actuator connection	Automatic detection: 2-wire (current and voltage) or 4-wire (voltage)	
Short-circuit-proof	yes	
Module diagnosis	yes	
Individual channel diagnosis	yes	
Substitute value	yes	
Can be used with PF-O-xDI-SIL	no	
Supply		
Supply voltage	24 V DC +20 %/-15 %	
Current consumption from system current path I_{SYS}	8 mA	
Current consumption from output current path I_{OUT}	92 mA	
General data		
Weight (operational status)	94 g	
For additional general data, see Section 3.4		

Overview of the editable parameters UR20-4AO-UI-16-M-DIAG

Channel	Description	Options[1)]	Default
0 ... 3	Data format	S5 Data format (0) / S7 Data format (1)	S7 Data format
0 ... 3	Output range	0 to 20 mA (0) / 4 to 20 mA (1) / 0 to 10 V (2) / -10 to 10 V (3) / 0 to 5 V (4) / -5 to 5 V (5) / 1 to 5 V (6) / 2 to 10 V (7) /disabled (8)	disabled
0 ... 3	Substitute value	depending on the channels data format (S5/S7), see Table "Output range"	0
0 ... 3	Channel diagnosis	disabled (0) / enabled (1)	disabled

1) Values in brackets for Modbus-TCP (firmware version 02.00.00 and higher), CANopen, EtherCAT and EtherNet/IP via module parameter class

Diagnostic data UR20-4AO-UI-16-M-DIAG

Name	Bytes	Bit	Description	Default
Error indicator	0	0	Module error	
		1	Internal error	
		2	External error	
		3	Channel error	
		4	Reserved	0
		5	Power supply fault	
		6	Reserved	0
		7	Parameter error	
Module type	1	0	Module Type	0x05
		1		
		2		
		3		
		4	Channel information available	1
		5 - 7	Reserved	0
Error byte 2	2	0 - 7	Reserved	0
Error byte 3	3	0 - 2	Reserved	0
		3	Internal diagnostic FIFO full	
		4	Power supply fault	
		5	Reserved	0
		6	Process alarm lost	
		7	Reserved	0
Channel type	4	0 - 6	Channel type	0x73
		7	Reserved	0
Diagnostic bits per channel	5		Number of diagnostic bit per channel	8
Number of channels	6		Number of similar channels per module	4
Channel error	7	0	Error at channel 0	
		1	Error at channel 1	
		2	Error at channel 2	
		3	Error at channel 3	
		4 ... 7	Reserved	0
	8 ... 10	0 ... 31	Reserved	0
Error Channel 0	11	0	Parameter Error	
		1	Overtemperature	
		2	Overload	
		3	Error	
		4	Line break	
		5 ... 7	Reserved	0
Error Channel 1	12	0	Parameter Error	
		1	Overtemperature	
		2	Overload	
		3	Error	
		4	Line break	
		5 ... 7	Reserved	0

Diagnostic data UR20-4AO-UI-16-M-DIAG

Name	Bytes	Bit	Description	Default
Error Channel 2	13	0	Parameter Error	
		1	Overtemperature	
		2	Overload	
		3	Error	
		4	Line break	
		5 ... 7	Reserved	0
Error Channel 3	14	0	Parameter Error	
		1	Overtemperature	
		2	Overload	
		3	Error	
		4	Line break	
		5 ... 7	Reserved	0
Channel 4 error to Channel 31 error	15 - 42	0 - 7	Reserved	0
Time stamp	43 - 46		Time stamp [µs] (32 bit)	

Process data[1] outputs UR20-4AO-UI-16-M-DIAG

Byte	Format	Description
QB0	Word	AO0
QB1		
QB2	Word	AO1
QB3		
QB4	Word	AO2
QB5		
QB6	Word	AI03
QB7		

1) Internal process data mapping with data format "Standard". Depending on the fieldbus specification and the data format of the communicating fieldbus components the bytes and/or words can be reversed during data transfer.

Output range[1] UR20-4AO-UI-16-M-DIAG

Output range	Current (I) / Voltage (U)	Decimal (D)	Hexadecimal	Range	Conversion
0 ... 20 mA Siemens S7 format	23.52 mA	32511	0x7EFF	Overloading	D = 27648 x I / 20 I = D x 20 / 27648
	20 mA	27648	0x6C00	Nominal range	
	10 mA	13824	0x3600		
	0 mA	0	0x0000		
0 ... 20 mA Siemens S5 format	23.52 mA	19268	0x4B44	Overloading	D = 16384 x I / 20 I = D x 20 / 16384
	20 mA	16384	0x4000	Nominal range	
	10 mA	8192	0x2000		
	0 mA	0	0x0000		
4 ... 20mA Siemens S7 format	22.81 mA	32511	0x7EFF	Overloading	D = 27648 x (I - 4) / 16 I= D x 16 / 27648 + 4
	20 mA	27648	0x6C00	Nominal range	
	12 mA	13824	0x3600		
	4 mA	0	0x0000		
	1.19 mA	-4864	0xED00	Underloading	
4 ... 20mA Siemens S5 format	22.82 mA	19268	0x4B44	Overloading	D = 27648 x (I - 4) / 16 I = D x 16 / 16384 + 4
	20 mA	16384	0x4000	Nominal range	
	12 mA	8192	0x2000		
	4 mA	0	0x0000		
	0.8 mA	-3277	0xF333	Underloading	
0 ... 10 V Siemens S7 format	11.76 V	32511	0x7EFF	Overloading	D = 27648 x U/10 U = D x 10 / 27648
	10 V	27648	0x6C00	Nominal range	
	5 V	13824	0x3600		
	0 V	0	0x0000		
0 ... 10 V Siemens S5 format	11.76 V	19268	0x4B44	Overloading	D = 16384 x U / 10 U = D x 10 / 16384
	10 V	16384	0x4000	Nominal range	
	5 V	8192	0x2000		
	0 V	0	0x0000		

1) If the process value is beyond the valid output range, the corresponding channel releases 0 V and 0 mA respectively.

Output range[1] UR20-4AO-UI-16-M-DIAG

Output range	Current (I) / Voltage (U)	Decimal (D)	Hexadecimal	Range	Conversion
±10 V Siemens S7 format	11.76 V	32511	0x7EFF	Overloading	D = 27648 x U / 10 U = D x 10 / 27648
	10 V	27648	0x6C00	Nominal range	
	5 V	13824	0x3600		
	0 V	0	0x0000		
	-5 V	-13824	0xCA00		
	-10 V	-27648	0x9400		
	-11.76 V	-32512	0x8100	Underloading	
±10 V Siemens S5 format	11,76 V	19268	0x4B44	Overloading	D = 16384 x U / 10 U = D x 10 / 16384
	10 V	16384	0x4000	Nominal range	
	5 V	8192	0x2000		
	0 V	0	0x0000		
	-5 V	-8192	0xE000		
	-10 V	-16384	0xC000		
	-11,76 V	-19268	0xB4BC	Underloading	
2 ... 10 V Siemens S7 format	11,41 V	32511	0x7EFF	Overloading	D = 27648 x (U – 2) / 8 U = D x 8 / 27648 + 2
	10 V	27648	0x6C00	Nominal range	
	6 V	13824	0x3600		
	2 V	0	0x0000		
	0,59 V	-4864	0xED00	Underloading	
2 ... 10 V Siemens S5 format	11,41 V	19268	0x4B44	Overloading	D = 16384 x (U – 2) / 8 U = D x 8 / 16384 + 2
	10 V	16384	0x4000	Nominal range	
	6 V	8192	0x2000		
	2V	0	0x0000		
	0,40 V	-3277	0xF333	Underloading	
1 ... 5 V Siemens S7 format	5,7 V	32511	0x7EFF	Overloading	D = 27648 x (U – 1) / 4 U = D x 4 / 27648 + 1
	5 V	27648	0x6C00	Nominal range	
	3 V	13824	0x3600		
	1 V	0	0x0000		
	0,30 V	-4864	0xED00	Underloading	

1) If the process value is beyond the valid output range, the corresponding channel releases 0 V and 0 mA respectively.

Output range[1] UR20-4AO-UI-16-M-DIAG

Output range	Current (I) / Voltage (U)	Decimal (D)	Hexadecimal	Range	Conversion
1 ... 5 V Siemens S5 format	5,7 V	19268	0x4B44	Overloading	D = 16384 x (U – 1) / 4 U = D x 4 / 16384 + 1
	5 V	16384	0x4000	Nominal range	
	3 V	8192	0x2000		
	1 V	0	0x0000		
	0,20 V	-3277	0xF333	Underloading	
0 ... 5 V Siemens S7 format	5,88 V	32511	0x7EFF	Overloading	D = 27648 x U / 5 U = D x 5 / 27648
	5 V	27648	0x6C00	Nominal range	
	2,5 V	13824	0x3600		
	0 V	0	0x0000		
0 ... 5 V Siemens S5 format	5,88 V	19268	0x4B44	Overloading	D = 16384 x U / 5 U = D x 5 / 16384
	5 V	16384	0x4000	Nominal range	
	2,5 V	8192	0x2000		
	0 V	0	0x0000		
±5 V Siemens S7 format	5,88 V	32511	0x7EFF	Overloading	D = 27648 x U / 5 U = D x 5 / 27648
	5 V	27648	0x6C00	Nominal range	
	2,5	13824	0x3600		
	0 V	0	0x0000		
	-2,5 V	-13824	0xCA00		
	-5 V	-27648	0x9400		
	-5,88 V	-32512	0x8100	Underloading	
±5 V Siemens S5 format	5,88 V	19268	0x4B44	Overloading	D = 16384 x U / 5 U = D x 5 / 16384
	5 V	16384	0x4000	Nominal range	
	2,5	8192	0x2000		
	0 V	0	0x0000		
	-2,5 V	-8192	0xE000		
	-5 V	-16384	0xC000		
	-5,88 V	-19268	0xB4BC	Underloading	

1) If the process value is beyond the valid output range, the corresponding channel releases 0 V and 0 mA respectively.

The following applies for all S5 and S7 ranges:
value > overload range = output deactivated
value < underload range = output deactivated

6.73 Analogue output module UR20-4AO-UI-16-HD

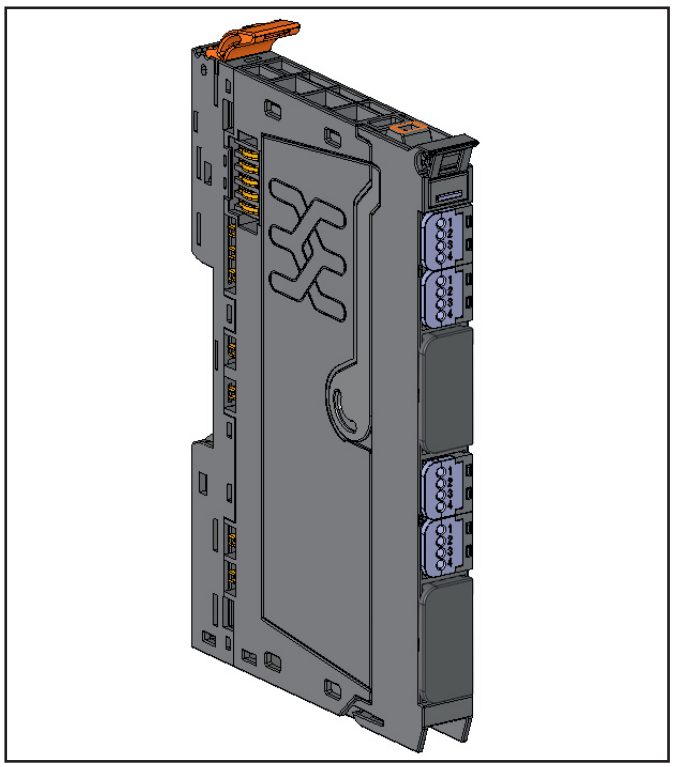

Analogue output module UR20-4AO-UI-16-HD (Item No. 1510690000)

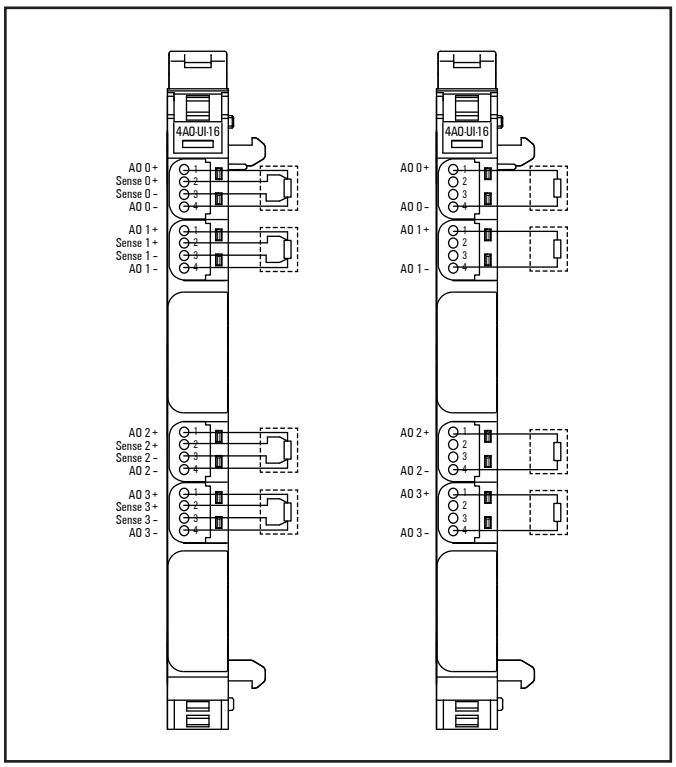

Connection diagram UR20-4AO-UI-16-HD

The analogue output module UR20-4AO-UI-16-HD can control up to 4 analogue actuators with ±10 V, ±5 V, 0 ... 10 V, 0 ... 5 V, 2 ... 10 V, 1 ... 5 V, 0 ... 20 mA or 4 ... 20 mA. The resolution is 16 bit per channel. An actuator can be connected to each connector in a 2-wire or 4-wire connection (IDC), the internal switching is carried out automatically. The output range is defined using parameterisation. A status LED is assigned to each channel. The outputs are supplied with power from the output current path (I_{OUT}). The outputs are decoupled from the system bus I_{SYS}, but there is no potential isolation to the output current path I_{OUT}.

ATTENTION

The module can be destroyed!

Connections AO 0–, AO 1–, AO 2– and AO 3– are connected to the supply potential (GND OUT).

► Realise the wiring in such a way that no compensation current will flow through the module.

Please regard the following notes when wiring, to avoid perturbation effects and to ensure proper function of the module.

► Use shielded analogue lines only and earth them on both ends. In case of potential differences between the ends, you should earth one end only.

► Always use shielded twisted pair lines when connecting the actuators.

► Shielding: Apply the cable schield to the functional earth directly on entering the cabinet; on applications without cabinet apply it to a shield bus.

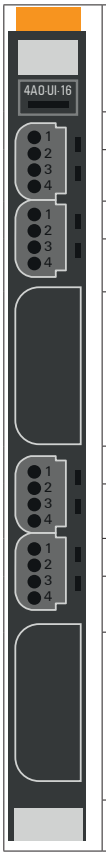

	Module status LED Green: Communication over the system bus Red: Error
1.1	Red: Channel 0 at voltage output: overload or short circuit, at current output: shunt resistance too high or line break detected
2.1	Red: Channel 1 at voltage output: overload or short circuit, at current output: shunt resistance too high or line break detected
5.1	Red: Channel 2 at voltage output: overload or short circuit, at current output: shunt resistance too high or line break detected
6.1	Red: Channel 3 at voltage output: overload or short circuit, at current output: shunt resistance too high or line break detected

LED indicators UR20-4AO-UI-16-HD, troubleshooting see Chapter 12

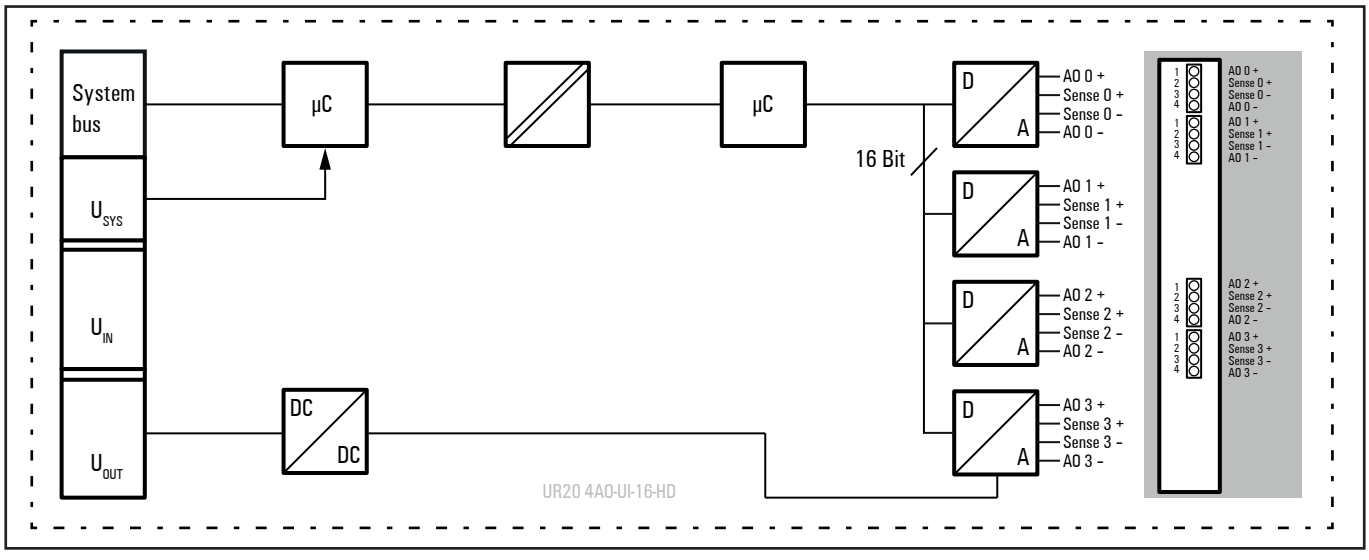

Block diagram UR20-4AO-UI-16-HD

Technical data UR20-4AO-UI-16-HD (Item No. 1510690000)

System data		
Data	Process, parameter and diagnostic data depend on the coupler used, see coupler description.	
Interface	u-remote system bus	
System bus transfer rate	48 Mbps	
Potential isolation	Channel/System bus	yes
	Channel/Channel	no
Outputs		
Number	4	
Output levels	1. Voltage (0 ... 5 V, ±5 V, 0 ... 10 V, ±10 V, 1 ... 5 V, 2 ... 10 V) 2. Current (0 ... 20 mA, 4 ... 20 mA)	
Response time	1 ms for 4 channels	
Resolution	16 bits	
Accuracy	0.1 % FSR max., 0.05 % FSR typ.	
Temperature coefficient	30 ppm/K	
Max. error between T_{min} and T_{max}	± 0,24 % FSR	
Monotony	yes	
Crosstalk between the channels	±0.001 % FSR max.	
Repeat accuracy	< ±1 mV eff.	
Voltage output load resistance	≥ 1 kΩ (at > 50 °C ambient temperature: max. 25 mA total sensor current)	
Current output load resistance	≤ 600 Ω	
Actuator connection	Automatic detection: 2-wire (current and voltage) or 4-wire (voltage)	
Short-circuit-proof	yes	
Module diagnosis	yes	
Individual channel diagnosis	no	
Substitute value	yes	
Can be used with PF-O-xDI-SIL	yes	
Supply		
Supply voltage	24 V DC +20 %/-15 %	
Current consumption from system current path I_{IN}	8 mA	
Current consumption from output current path I_{OUT}	110 mA	
Connection data		
Type of connection	Insulation Displacement Connection (IDC)	
Line connection cross-section	Single-wired, fine-wired	0.14 ... 0.35 mm^2
General data		
Weight (operational status)	98 g	
For additional general data, see Section 3.4		

Overview of the editable parameters UR20-4AO-UI-16-HD

Channel	Description	Options[1)]	Default
0 ... 3	Data format	S5 Data format (0) / S7 Data format (1)	S7 Data format
0 ... 3	Output range	0 to 20 mA (0) / 4 to 20 mA (1) / 0 to 10 V (2) / -10 to 10 V (3) / 0 to 5 V (4) / -5 to 5 V (5) / 1 to 5 V (6) / 2 to 10 V (7) /disabled (8)	disabled
0 ... 3	Substitute value	depending on the channels data format (S5/S7), see Table "Output range"	0

1) Values in brackets for Modbus-TCP (firmware version 02.00.00 and higher), CANopen, EtherCAT and EtherNet/IP via module parameter class

Diagnostic data UR20-4AO-UI-16-HD

Name	Byte	Bit	Description	Default
Error indicator	0	0	Module error	
		1	Internal error	
		2	External error	
		3	Channel error	0
		4	Error	
		5	Reserved	0
		6	Reserved	0
		7	Parameter error	
Module typ	1	0	Module Type	0x05
		1		
		2		
		3		
		4	Reserved	0
		5	Reserved	0
		6	Reserved	0
		7	Reserved	0
Error byte 2	2	0 ... 7	Reserved	0
Error byte 3	3	0 ... 2	Reserved	0
		3	Internal diagnostic FIFO full	
		4	Power supply fault	
		5	Reserved	0
		6	Reserved	0
		7	Reserved	0
Channel type	4	0 ... 6	Channel type	0x73
		7	Reserved	0
Diagnostic bits per channel	5		Number of diagnostic bit per channel	0
Number of channels	6		Number of similar channels per module	4
Channel error	7 ... 10	0 ... 31	Reserved	0
Channel 0 error to Channel 31 error	11 ... 42	0 ... 7	Reserved	0
Time stamp	43-46		time stamp [µs] (32bit)	

Process data[1)] outputs UR20-4AO-UI-16-HD

Byte	Format	Description
QB0	Word	AO0
QB1		
QB2	Word	AO1
QB3		
QB4	Word	AO2
QB5		
QB6	Word	AO3
QB7		

1) Internal process data mapping with data format "Standard". Depending on the fieldbus specification and the data format of the communicating fieldbus components the bytes and/or words can be reversed during data transfer.

Output range[1] UR20-4AO-UI-16-HD

Output range	Current (I) / Voltage (U)	Decimal (D)	Hexadecimal	Range	Conversion
0 ... 20 mA Siemens S7 format	23,52 mA	32511	0x7EFF	Overloading	D = 27648 x I / 20 I = D x 20 / 27648
	20 mA	27648	0x6C00	Nominal range	
	10 mA	13824	0x3600		
	0 mA	0	0x0000		
0 ... 20 mA Siemens S5 format	23,52 mA	19268	0x4B44	Overloading	D = 16384 x I / 20 I = D x 20 / 16384
	20 mA	16384	0x4000	Nominal range	
	10 mA	8192	0x2000		
	0 mA	0	0x0000		
4 ... 20mA Siemens S7 format	22,81 mA	32511	0x7EFF	Overloading	D = 27648 x (I - 4) / 16 I= D x 16 / 27648 + 4
	20 mA	27648	0x6C00	Nominal range	
	12 mA	13824	0x3600		
	4 mA	0	0x0000		
	1,19 mA	-4864	0xED00	Underloading	
4 ... 20 mA Siemens S5 format	22,82 mA	19268	0x4B44	Overloading	D = 16384 x (I - 4) / 16 I = D x 16 / 16384 + 4
	20 mA	16384	0x4000	Nominal range	
	12 mA	8192	0x2000		
	4 mA	0	0x0000		
	0,8 mA	-3277	0xF333	Underloading	
0 ... 10 V Siemens S7 format	11,76 V	32511	0x7EFF	Overloading	D = 27648 x U/10 U = D x 10 / 27648
	10 V	27648	0x6C00	Nominal range	
	5 V	13824	0x3600		
	0 V	0	0x0000		
0 ... 10 V Siemens S5 format	11,76 V	19268	0x4B44	Overloading	D = 16384 x U / 10 U = D x 10 / 16384
	10 V	16384	0x4000	Nominal range	
	5 V	8192	0x2000		
	0 V	0	0x0000		

1) If the process value is beyond the valid output range, the corresponding channel releases 0 V and 0 mA respectively.

Output range[1] UR20-4AO-UI-16-HD

Output range	Current (I) / Voltage (U)	Decimal (D)	Hexadecimal	Range	Conversion
±10 V Siemens S7 format	11,76 V	32511	0x7EFF	Overloading	D = 27648 x U / 10 U = D x 10 / 27648
	10 V	27648	0x6C00	Nominal range	
	5 V	13824	0x3600		
	0 V	0	0x0000		
	-5 V	-13824	0xCA00		
	-10 V	-27648	0x9400		
	-11,76 V	-32512	0x8100	Underloading	
±10 V Siemens S5 format	11,76 V	19268	0x4B44	Overloading	D = 16384 x U / 10 U = D x 10 / 16384
	10 V	16384	0x4000	Nominal range	
	5 V	8192	0x2000		
	0 V	0	0x0000		
	-5 V	-8192	0xE000		
	-10 V	-16384	0xC000		
	-11,76 V	-19268	0xB4BC	Underloading	
2 ... 10 V Siemens S7 format	11,41 V	32511	0x7EFF	Overloading	D = 27648 x (U – 2) / 8 U = D x 8 / 27648 + 2
	10 V	27648	0x6C00	Nominal range	
	6 V	13824	0x3600		
	2 V	0	0x0000		
	0,59 V	-4864	0xED00	Underloading	
2 ... 10 V Siemens S5 format	11,41 V	19268	0x4B44	Overloading	D = 16384 x (U – 2) / 8 U = D x 8 / 16384 + 2
	10 V	16384	0x4000	Nominal range	
	6 V	8192	0x2000		
	2V	0	0x0000		
	0,40 V	-3277	0xF333	Underloading	
1 ... 5 V Siemens S7 format	5,7 V	32511	0x7EFF	Overloading	D = 27648 x (U – 1) / 4 U = D x 4 / 27648 + 1
	5 V	27648	0x6C00	Nominal range	
	3 V	13824	0x3600		
	1 V	0	0x0000		
	0,30 V	-4864	0xED00	Underloading	

1) If the process value is beyond the valid output range, the corresponding channel releases 0 V and 0 mA respectively.

Output range[1] UR20-4AO-UI-16-HD

Output range	Current (I) / Voltage (U)	Decimal (D)	Hexadecimal	Range	Conversion
1 ... 5 V Siemens S5 format	5,7 V	19268	0x4B44	Overloading	D = 16384 x (U – 1) / 4 U = D x 4 / 16384 + 1
	5 V	16384	0x4000	Nominal range	
	3 V	8192	0x2000		
	1 V	0	0x0000		
	0,20 V	-3277	0xF333	Underloading	
0 ... 5 V Siemens S7 format	5,88 V	32511	0x7EFF	Overloading	D = 27648 x U / 5 U = D x 5 / 27648
	5 V	27648	0x6C00	Nominal range	
	2,5 V	13824	0x3600		
	0 V	0	0x0000		
0 ... 5 V Siemens S5 format	5,88 V	19268	0x4B44	Overloading	D = 16384 x U / 5 U = D x 5 / 16384
	5 V	16384	0x4000	Nominal range	
	2,5 V	8192	0x2000		
	0 V	0	0x0000		
±5 V Siemens S7 format	5,88 V	32511	0x7EFF	Overloading	D = 27648 x U / 5 U = D x 5 / 27648
	5 V	27648	0x6C00	Nominal range	
	2,5	13824	0x3600		
	0 V	0	0x0000		
	-2,5 V	-13824	0xCA00		
	-5 V	-27648	0x9400		
	-5,88 V	-32512	0x8100	Underloading	
±5 V Siemens S5 format	5,88 V	19268	0x4B44	Overloading	D = 16384 x U / 5 U = D x 5 / 16384
	5 V	16384	0x4000	Nominal range	
	2,5	8192	0x2000		
	0 V	0	0x0000		
	-2,5 V	-8192	0xE000		
	-5 V	-16384	0xC000		
	-5,88 V	-19268	0xB4BC	Underloading	

1) If the process value is beyond the valid output range, the corresponding channel releases 0 V and 0 mA respectively.

The following applies for all S5 and S7 ranges:
value > overload range = output deactivated
value < underload range = output deactivated

6.74 Analogue output module UR20-4AO-UI-16-DIAG-HD

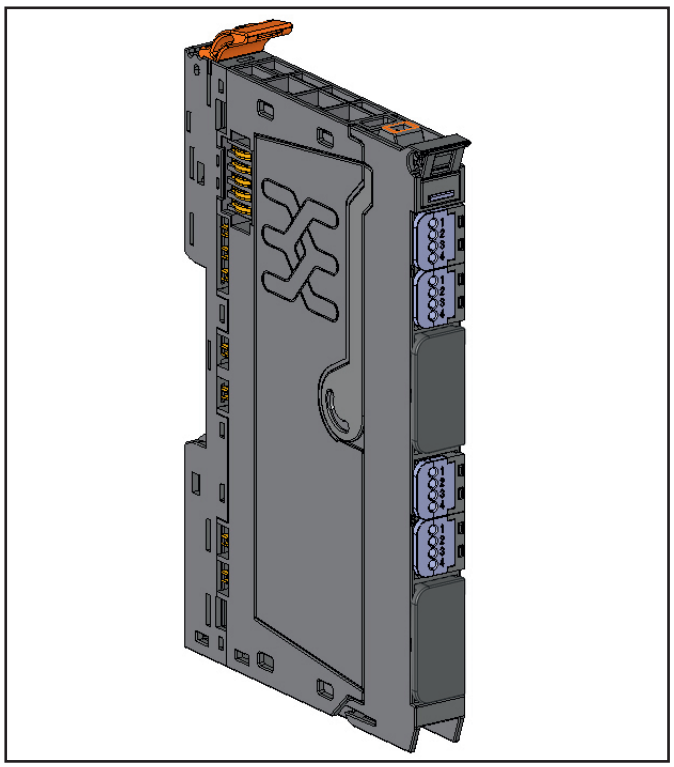

Analogue output module UR20-4AO-UI-16-DIAG-HD (Item No. 1506930000)

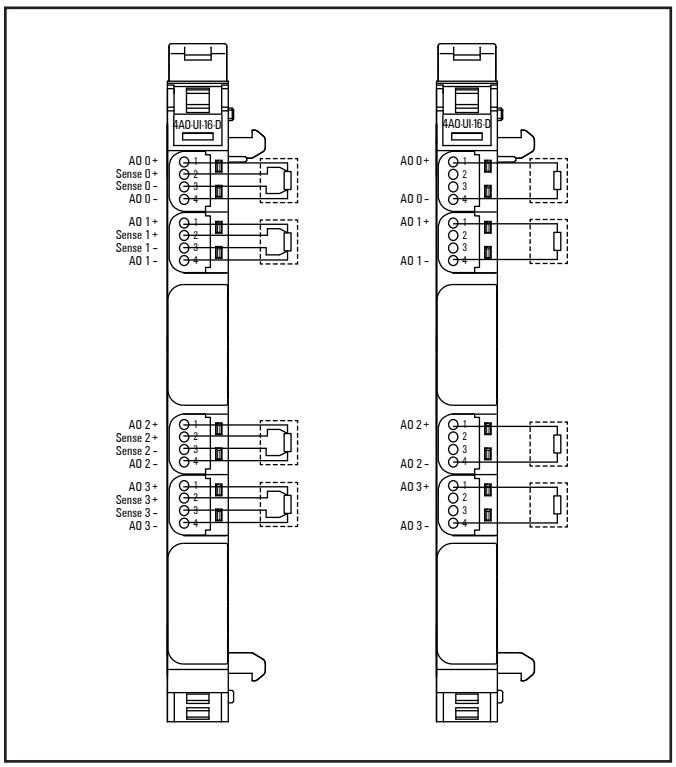

Connection diagram UR20-4AO-UI-16-DIAG-HD

The analogue output module UR20-4AO-UI-16-DIAG-HD can control up to 4 analogue actuators with ±10 V, ±5 V, 0 ... 10 V, 0 ... 5 V, 2 ... 10 V, 1 ... 5 V, 0 ... 20 mA or 4 ... 20 mA. The resolution is 16 bit per channel. An actuator can be connected to each connector in a 2-wire or 4-wire connection (IDC), the internal switching is carried out automatically. The output range is defined using parameterisation. A status LED is assigned to each channel. The outputs are supplied with power from the output current path (I_{OUT}). The outputs are decoupled from the system bus I_{SYS}, but there is no potential isolation to the output current path I_{OUT}.

The module provides individual channel diagnosis with channel related error messages.

ATTENTION

The module can be destroyed!

Connections AO 0–, AO 1–, AO 2– and AO 3– are connected to the supply potential (GND OUT).

► Realise the wiring in such a way that no compensation current will flow through the module.

Please regard the following notes when wiring, to avoid perturbation effects and to ensure proper function of the module.

► Use shielded analogue lines only and earth them on both ends. In case of potential differences between the ends, you should earth one end only.

► Always use shielded twisted pair lines when connecting the actuators.

► Shielding: Apply the cable schield to the functional earth directly on entering the cabinet; on applications without cabinet apply it to a shield bus.

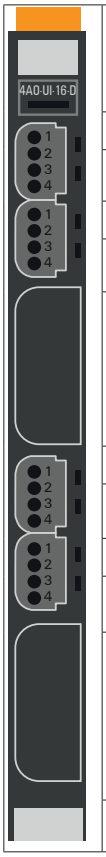

	Module status LED Green: Communication over the system bus Red: Error
1.1	Red: Channel 0 at voltage output: overload or short circuit, at current output: shunt resistance too high or line break detected
2.1	Red: Channel 1 at voltage output: overload or short circuit, at current output: shunt resistance too high or line break detected
5.1	Red: Channel 2 at voltage output: overload or short circuit, at current output: shunt resistance too high or line break detected
6.1	Red: Channel 3 at voltage output: overload or short circuit, at current output: shunt resistance too high or line break detected

LED indicators UR20-4AO-UI-16-DIAG-HD, troubleshooting see Chapter 12

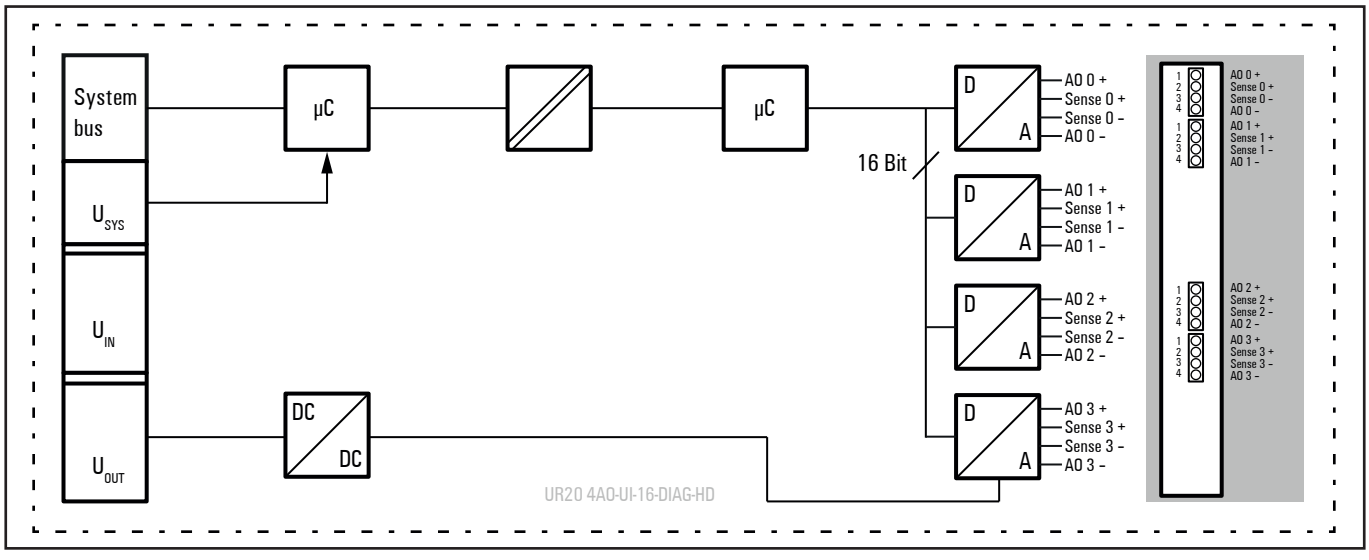

Block diagram UR20-4AO-UI-16-DIAG-HD

Technical data UR20-4AO-UI-16-DIAG-HD (Item No. 1506930000)

System data		
Data	Process, parameter and diagnostic data depend on the coupler used, see coupler description.	
Interface	u-remote system bus	
System bus transfer rate	48 Mbps	
Potential isolation	Channel/System bus	yes
	Channel/Channel	no
Outputs		
Number	4	
Output levels	1. Voltage (0 ... 5 V, ±5 V, 0 ... 10 V, ±10 V, 1 ... 5 V, 2 ... 10 V) 2. Current (0 ... 20 mA, 4 ... 20 mA)	
Response time	1 ms for 4 channels	
Resolution	16 bits	
Accuracy	0.1 % FSR max., 0.05 % FSR typ.	
Temperature coefficient	30 ppm/K	
Max. error between T_{min} and T_{max}	± 0,24 % FSR	
Monotony	yes	
Crosstalk between the channels	±0.001 % FSR max.	
Repeat accuracy	< ±1 mV eff.	
Voltage output load resistance	≥ 1 kΩ (at > 50 °C ambient temperature: max. 25 mA total sensor current)	
Current output load resistance	≤ 600 Ω	
Actuator connection	Automatic detection: 2-wire (current and voltage) or 4-wire (voltage)	
Short-circuit-proof	yes	
Module diagnosis	yes	
Individual channel diagnosis	yes	
Substitute value	yes	
Can be used with PF-O-xDI-SIL	yes	
Supply		
Supply voltage	24 V DC +20 %/-15 %	
Current consumption from system current path I_{SYS}	8 mA	
Current consumption from output current pat I_{OUT}	110 mA	
Connection data		
Type of connection	Insulation Displacement Connection (IDC)	
Line connection cross-section	Single-wired, fine-wired	0.14 ... 0.35 mm²
General data		
Weight (operational status)	98 g	
For additional general data, see Section 3.4		

Overview of the editable parameters UR20-4AO-UI-16-DIAG-HD

Channel	Description	Options[1)]	Default
0 ... 3	Data format	S5 Data format (0) / S7 Data format (1)	S7 Data format
0 ... 3	Output range	0 to 20 mA (0) / 4 to 20 mA (1) / 0 to 10 V (2) / -10 to 10 V (3) / 0 to 5 V (4) / -5 to 5 V (5) / 1 to 5 V (6) / 2 to 10 V (7) /disabled (8)	disabled
0 ... 3	Substitute value	depending on the channels data format (S5/S7), see Table "Output range"	0
0 ... 3	Channel diagnosis	disabled (0) / enabled (1)	disabled

1) Values in brackets for Modbus-TCP (firmware version 02.00.00 and higher), CANopen, EtherCAT and EtherNet/IP via module parameter class

Process data[1)] outputs UR20-4AO-UI-16-DIAG-HD

Byte	Format	Description
QB0	Word	AO0
QB1		
QB2	Word	AO1
QB3		
QB4	Word	AO2
QB5		
QB6	Word	AO3
QB7		

1) Internal process data mapping with data format "Standard". Depending on the fieldbus specification and the data format of the communicating fieldbus components the bytes and/or words can be reversed during data transfer.

Diagnostic data UR20-4AO-UI-16-DIAG-HD

Name	Byte	Bit	Description	Default
Error indicator	0	0	Module error	
		1	Internal error	
		2	External error	
		3	Channel error	
		4	Reserved	0
		5	Power supply fault	
		6	Reserved	0
		7	Parameter error	
Module type	1	0	Module Type	0x05
		1		
		2		
		3		
		4	Channel information available	1
		5 ... 7	Reserved	0
Error byte 2	2	0 ... 7	Reserved	0
Error byte 3	3	0 ... 2	Reserved	0
		3	Internal diagnostic FIFO full	
		4	Power supply fault	
		5	Reserved	0
		6	Reserved	0
		7	Reserved	0
Channel type	4	0 ... 6	Channel type	0x73
		7	Reserved	0
Diagnostic bits per channel	5		Number of diagnostic bit per channel	8
Number of channels	6		Number of similar channels per module	4
Channel error	7	0	Error at channel 0	
		1	Error at channel 1	
		2	Error at channel 2	
		3	Error at channel 3	
		4 ... 7	Reserved	0
	8 ... 10	0 ... 31	Reserved	0
Channel 0 error	11	0	Parameter Error	
		1	Overtemperature	
		2	Overload	
		3	Error	
		4	Line break	
		5 ... 7	Reserved	0
Channel 1 error	12	0	Parameter Error	
		1	Overtemperature	
		2	Overload	
		3	Error	
		4	Line break	
		5 ... 7	Reserved	0

Diagnostic data UR20-4AO-UI-16-DIAG-HD

Name	Byte	Bit	Description	Default
Channel 2 error	13	0	Parameter Error	
		1	Overtemperature	
		2	Overload	
		3	Error	
		4	Line break	
		5 ... 7	Reserved	0
Channel 3 error	14	0	Parameter Error	
		1	Overtemperature	
		2	Overload	
		3	Error	
		4	Line break	
		5 ... 7	Reserved	0
Channel 4 error... Channel 31 error	15 ... 42	0 ... 7	Reserved	0
Time stamp	43 ... 46		time stamp [µs] (32bit)	

Output range[1] UR20-4AO-UI-16-DIAG-HD

Output range	Current (I) / Voltage (U)	Decimal (D)	Hexadecimal	Range	Conversion
0 ... 20 mA Siemens S7 format	23,52 mA	32511	0x7EFF	Overloading	D = 27648 x I / 20 I = D x 20 / 27648
	20 mA	27648	0x6C00	Nominal range	
	10 mA	13824	0x3600		
	0 mA	0	0x0000		
0 ... 20 mA Siemens S5 format	23,52 mA	19268	0x4B44	Overloading	D = 16384 x I / 20 I = D x 20 / 16384
	20 mA	16384	0x4000	Nominal range	
	10 mA	8192	0x2000		
	0 mA	0	0x0000		
4 ... 20mA Siemens S7 format	22,81 mA	32511	0x7EFF	Overloading	D = 27648 x (I - 4) / 16 I= D x 16 / 27648 + 4
	20 mA	27648	0x6C00	Nominal range	
	12 mA	13824	0x3600		
	4 mA	0	0x0000		
	1,19 mA	-4864	0xED00	Underloading	
4 ... 20 mA Siemens S5 format	22,82 mA	19268	0x4B44	Overloading	D = 16384 x (I - 4) / 16 I = D x 16 / 16384 + 4
	20 mA	16384	0x4000	Nominal range	
	12 mA	8192	0x2000		
	4 mA	0	0x0000		
	0,8 mA	-3277	0xF333	Underloading	
0 ... 10 V Siemens S7 format	11,76 V	32511	0x7EFF	Overloading	D = 27648 x U/10 U = D x 10 / 27648
	10 V	27648	0x6C00	Nominal range	
	5 V	13824	0x3600		
	0 V	0	0x0000		
0 ... 10 V Siemens S5 format	11,76 V	19268	0x4B44	Overloading	D = 16384 x U / 10 U = D x 10 / 16384
	10 V	16384	0x4000	Nominal range	
	5 V	8192	0x2000		
	0 V	0	0x0000		

1) If the process value is beyond the valid output range, the corresponding channel releases 0 V and 0 mA respectively.

Output range[1] UR20-4AO-UI-16-DIAG-HD

Output range	Current (I) / Voltage (U)	Decimal (D)	Hexadecimal	Range	Conversion
±10 V Siemens S7 format	11,76 V	32511	0x7EFF	Overloading	D = 27648 x U / 10 U = D x 10 / 27648
	10 V	27648	0x6C00	Nominal range	
	5 V	13824	0x3600		
	0 V	0	0x0000		
	-5 V	-13824	0xCA00		
	-10 V	-27648	0x9400		
	-11,76 V	-32512	0x8100	Underloading	
±10 V Siemens S5 format	11,76 V	19268	0x4B44	Overloading	D = 16384 x U / 10 U = D x 10 / 16384
	10 V	16384	0x4000	Nominal range	
	5 V	8192	0x2000		
	0 V	0	0x0000		
	-5 V	-8192	0xE000		
	-10 V	-16384	0xC000		
	-11,76 V	-19268	0xB4BC	Underloading	
2 ... 10 V Siemens S7 format	11,41 V	32511	0x7EFF	Overloading	D = 27648 x (U – 2) / 8 U = D x 8 / 27648 + 2
	10 V	27648	0x6C00	Nominal range	
	6 V	13824	0x3600		
	2 V	0	0x0000		
	0,59 V	-4864	0xED00	Underloading	
2 ... 10 V Siemens S5 format	11,41 V	19268	0x4B44	Overloading	D = 16384 x (U – 2) / 8 U = D x 8 / 16384 + 2
	10 V	16384	0x4000	Nominal range	
	6 V	8192	0x2000		
	2V	0	0x0000		
	0,40 V	-3277	0xF333	Underloading	
1 ... 5 V Siemens S7 format	5,7 V	32511	0x7EFF	Overloading	D = 27648 x (U – 1) / 4 U = D x 4 / 27648 + 1
	5 V	27648	0x6C00	Nominal range	
	3 V	13824	0x3600		
	1 V	0	0x0000		
	0,30 V	-4864	0xED00	Underloading	

1) If the process value is beyond the valid output range, the corresponding channel releases 0 V and 0 mA respectively.

Output range[1] UR20-4AO-UI-16-DIAG-HD

Output range	Current (I) / Voltage (U)	Decimal (D)	Hexadecimal	Range	Conversion
1 ... 5 V Siemens S5 format	5,7 V	19268	0x4B44	Overloading	D = 16384 x (U – 1) / 4 U = D x 4 / 16384 + 1
	5 V	16384	0x4000	Nominal range	
	3 V	8192	0x2000		
	1 V	0	0x0000		
	0,20 V	-3277	0xF333	Underloading	
0 ... 5 V Siemens S7 format	5,88 V	32511	0x7EFF	Overloading	D = 27648 x U / 5 U = D x 5 / 27648
	5 V	27648	0x6C00	Nominal range	
	2,5 V	13824	0x3600		
	0 V	0	0x0000		
0 ... 5 V Siemens S5 format	5,88 V	19268	0x4B44	Overloading	D = 16384 x U / 5 U = D x 5 / 16384
	5 V	16384	0x4000	Nominal range	
	2,5 V	8192	0x2000		
	0 V	0	0x0000		
±5 V Siemens S7 format	5,88 V	32511	0x7EFF	Overloading	D = 27648 x U / 5 U = D x 5 / 27648
	5 V	27648	0x6C00	Nominal range	
	2,5	13824	0x3600		
	0 V	0	0x0000		
	-2,5 V	-13824	0xCA00		
	-5 V	-27648	0x9400		
	-5,88 V	-32512	0x8100	Underloading	
±5 V Siemens S5 format	5,88 V	19268	0x4B44	Overloading	D = 16384 x U / 5 U = D x 5 / 16384
	5 V	16384	0x4000	Nominal range	
	2,5	8192	0x2000		
	0 V	0	0x0000		
	-2,5 V	-8192	0xE000		
	-5 V	-16384	0xC000		
	-5,88 V	-19268	0xB4BC	Underloading	

1) If the process value is beyond the valid output range, the corresponding channel releases 0 V and 0 mA respectively.

The following applies for all S5 and S7 ranges:
value > overload range = output deactivated
value < underload range = output deactivated

6.75 Digital counter module UR20-1CNT-100-1DO

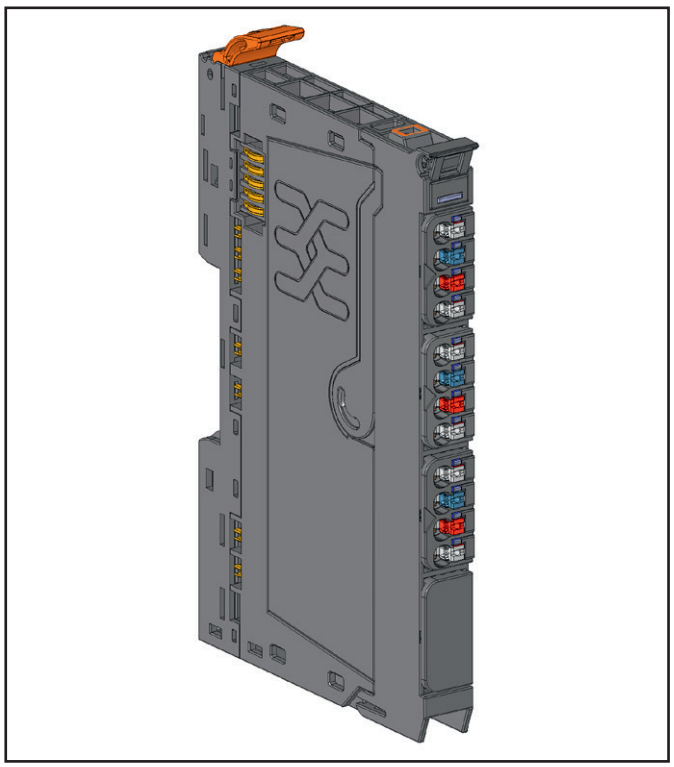

Counter module UR20-1CNT-100-1DO (Item No. 1315570000)

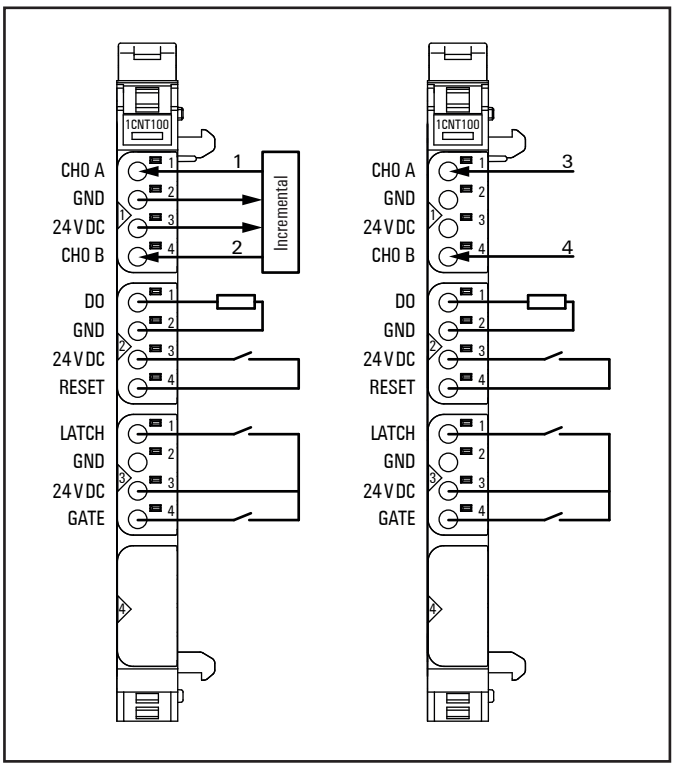

Connection diagram UR20-1CNT-100-1DO

The counter module UR20-1CNT-100-1DO can read square-wave signals (e.g. from an rotary encoder) with a maximum input frequency of 100 kHz. The 32-bit counter can count up or down within a predetermined range of values. The counter's basic functions are controlled by the coupler. In addition the counting behaviour can be influenced via the latch, gate and reset inputs.

A digital output can be parameterised to be activated immediatly upon either dropping below, meeting or exceeding the set comparison value. An overrun time can be provided with the parameter **Pulse duration**. Thus even a comparison condition that exists only for a very short time can be evaluated at the output. Moreover the output can be set back early in case the comparison condition is being met during a longer period.

In signal mode **Pulse and Direction**, channel CH0 A is used as the input and channel CH0 B as a direction-determining input. In **incremental** mode, an rotary encoder with track A and B can be connected.

A status LED is assigned to each channel. The module electronics supply the connected sensors with power from the input current path (I_{IN}).

1 Track A
2 Track B
3 Cycle
4 Direction 0/1 (24 V)

- One 32-bit counter, 24 V DC
- Counting frequency 100 kHz max (A/B channel, 1/2/4-times sampling or pulse and direction, invertible)
- Input filter (parameterisable)
- Latch value (triggered via separate input), comparision value, set value
- Gate input (hardware gate, HW gate), reset input, digital output controlled by an internal comparator
- Alarm and diagnostic function with µs time stamp
- µs time stamp for counting value (e.g. for speed measurements)

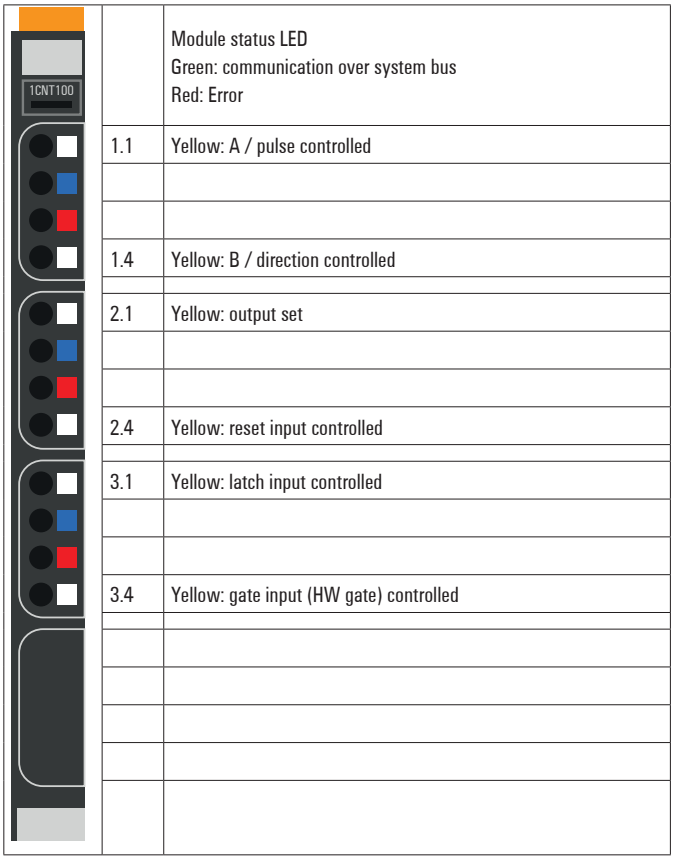

	Module status LED Green: communication over system bus Red: Error
1.1	Yellow: A / pulse controlled
1.4	Yellow: B / direction controlled
2.1	Yellow: output set
2.4	Yellow: reset input controlled
3.1	Yellow: latch input controlled
3.4	Yellow: gate input (HW gate) controlled

LED indicators UR20-1CNT-100-1DO, troubleshooting see Chapter 12

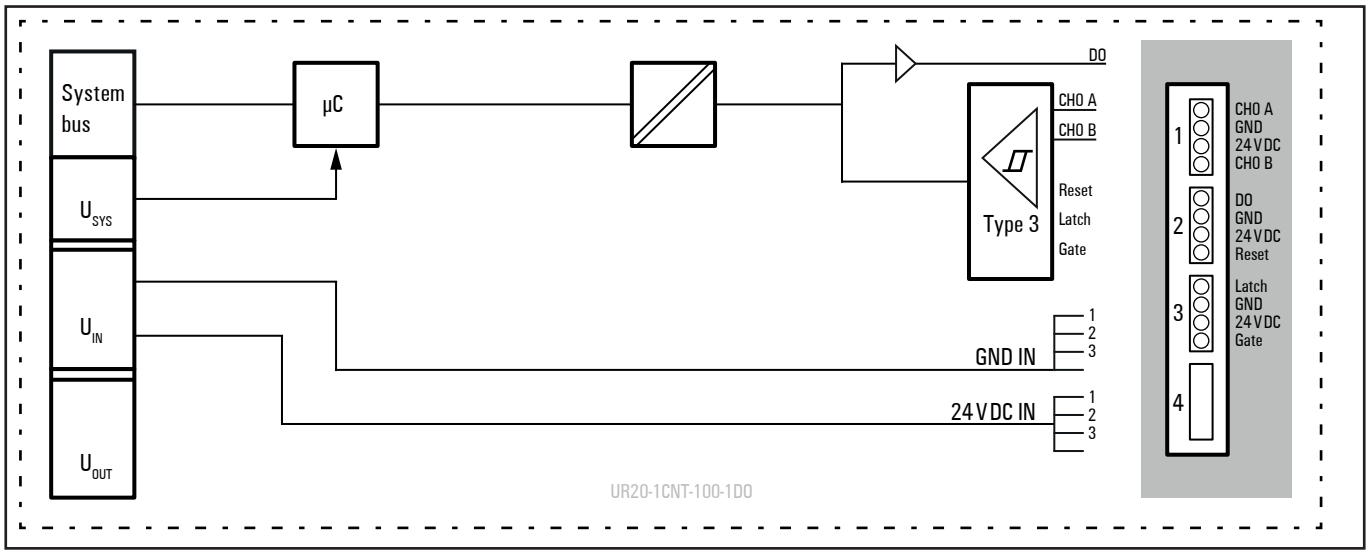

Block diagram UR20-1CNT-100-1DO

Technical data UR20-1CNT-100-1DO (Item No. 1315570000)

System data	
Data	Process, parameter and diagnostic data depend on the coupler used, see coupler description.
Interface	u-remote system bus
System bus transfer rate	48 Mbps
Digital inputs	
Number of counter inputs	1
Input type	Input characteristics for sensor types 1 and 3 are in accordance with EN 61131-2, suitable for incremental encoders
Input filter	Filter time adjustable from 0.01 to 1 ms
Low input voltage	< 5 V
High input voltage	> 11 V
Max. input current per channel	3.5 mA
Sensor supply	max. 2 A per plug
Sensor connection	2-wire, 3-wire
Reverse polarity protection	yes
Module diagnosis	yes
Individual channel diagnosis	yes
Counter width	32 bits
Maximum input frequency	100 kHz
Latch, gate, reset input	yes
Mode of operation	Pulse and direction / AB mode with 1-, 2-, 4-times sampling
Status, alarm, diagnostics	
Status indicator	yes
Process alarm	yes, parameterisable
Diagnostic alarm	yes
Outputs	
Number	1
Output current	0.5 A
Reverse polarity protection	yes
Module diagnosis	yes
Individual channel diagnosis	yes
Supply	
Supply voltage	24 V DC +20 %/-15 %
Current consumption from system current path I_{SYS}	8 mA
Current consumption from input current path I_{IN}	35 mA (plus output current for the digital output)

Technical data UR20-1CNT-100-1DO (Item No. 1315570000)

General data	
Weight (operational status)	83 g
For additional general data, see Section 3.4	

Overview of the editable parameter UR20-1CNT-100-1DO

Channel	Description	Options[1)]	Default
	Diagnostic alarm	disabled (0) / enabled (1)	disabled
0	Filter time signal A	0.010 ms [100 kHz] (0) / 0.017 ms [50 kHz] (1) / 0.033 ms [30 kHz] (2) / 0.1 ms [10 kHz] (3) / 0.2 ms [5 kHz] (4) / 0.5 ms [2 kHz] (5) / 1 ms [1 kHz] (6)	0,010 ms [100 kHz]
0	Filter time signal B		
0	Filter time latch		
0	Filter time gate		
0	Filter time reset		
0	Process alarm HW gate open	disabled (0) / enabled (1)	disabled
0	Process alarm HW gate closed	disabled (0) / enabled (1)	disabled
0	Process alarm overflow	disabled (0) / enabled (1)	disabled
0	Process alarm underflow	disabled (0) / enabled (1)	disabled
0	Process alarm comp. value	disabled (0) / enabled (1)	disabled
0	Process alarm end value	disabled (0) / enabled (1)	disabled
0	Process alarm latch value	disabled (0) / enabled (1)	disabled
0	Counting mode	count endless (0) / once - forward (1) / once - backwards (2) / once - no main direction (3) / periodic - forward (4) / periodic - backwards (5) / periodic - no main direction (6)	count endless
0	Condition for DO	disabled (0) / higher equal comparison value (1) / lower equal comparison value (2)/ equal comparison value (3)	disabled
0	Counter dir. signal B inv.	disabled (0) / enabled (1)	disabled
0	Reset	disabled (0) / high level (1) / rising edge 0-1 (2)/ rising edge once 0-1 (3)	disabled
0	Signal mode	Rotary transducer - single (0) / Rotary transducer - double (1) / Rotary transducer - quadruple (2) / Pulse and Direction (3) / Counter disabled (4)	Counter disabled
0	HW gate	disabled (0) / enabled (1)	disabled
0	Counter behaviour internal gate	Interrupt counting (0) / Cancel counting (1)	Cancel counting
0	End value	-2147483648 ... 2147483647	2147483647
0	Load value	-2147483648 ... 2147483647	0
0	Hysteresis	0 ... 255	0
0	Pulse duration	0 ... 255 [Input value x 2 = output time in ms; corresponds to 0 ... 510 ms]	0

1) Values in brackets for Modbus-TCP (firmware version 02.00.00 and higher), CANopen, EtherCAT and EtherNet/IP via module parameter class

The parameter setting in the coupler for the **Output behaviour on fieldbus error** affects the control word and thus the behaviour of the UR20-1CNT-100-1DO:

- The **Hold last value** setting
  The output continues working or switches as prametrized respectively.
  The counter continues to count during the error. Once normal operating conditions have been restored, the counter continues to count starting at the previous value.
- The **Enable substitute value** setting
  The output is switched off.
  The counter value is frozen. Once normal operating conditions have been restored, the counter value is reset to the parameterised load value.
- **All outputs off** setting
  The output is switched off.
  The counter behaves in the same way as for **Hold last value**.

Diagnostic data UR20-1CNT-100-1DO

Name	Bytes	Bit	Description	Default
Error indicator	0	0	Module error	
		1	Internal error	
		2	External error	
		3	Channel error	
		4	External auxiliary supply error	
		5	Reserved	0
		6	Reserved	0
		7	Parameter error	
Module type	1	0	Module Type	0x08
		1		
		2		
		3		
		4	Channel information available	1
		5	Reserved	0
		6	Reserved	0
		7	Reserved	0
Error byte 2	2	0 - 7	Reserved	0
Error byte 3	3	0 - 2	Reserved	0
		3	Internal diagnostic FIFO full	
		4	Reserved	0
		5	Reserved	0
		6	Process alarm lost	
		7	Reserved	0
Channel type	4	0 - 6	Channel type	0x76
		7	Reserved	0
Diagnostic bits per channel	5		Number of diagnostic bit per channel	8
Number of channels	6		Number of similar channels per module	1
Channel error	7	0	Error at channel 0	
		1 - 7	Reserved	0
Channel error	8	8 - 15	Reserved	0
Channel error	9	16 - 23	Reserved	0
Channel error	10	24 - 31	Reserved	0
Channel 0 error	11	0	Hardware gate opened	
		1	Hardware gate closed	
		2	Overflow/underflow/end value	
		3	Comparison value reached	
		4	Latch value saved	
		5 - 7	Reserved	0
Channel 1 error to Channel 31 error	12 to 42	0 - 7	Reserved	0
Time stamp	43 - 46		Time stamp [µs] (32 bit)	

Process data[1] inputs UR20-1CNT-100-1DO

Byte	Format	Name	Bit	Function when active	Remark
IB0 ... IB3	Double word	Counter value			current count value
IB4 ... IB7	Double word	Latch value			Count value image at the point of edge 0-1 at latch input
IB8	Word	Counter status	IX8.0	Reset was active	remains until reset mode is disabled
			IX8.1	DO released	
			IX8.2	SW gate active	
			IX8.3	Reset input active	depending only of the parameter „reset“ but not of the reset mode
			IX8.4	HW gate active	
			IX8.5	internal gate active	
			IX8.6	DO set	
			IX8.7	Counter direction down	
IB9			IX9.0	Counter direction up	
			IX9.1	Comparison condition met	remains until reset of the status bits
			IX9.2	End value reached	remains until reset of the status bits
			IX9.3	Overflow performed	remains until reset of the status bits
			IX9.4	Underflow performed	remains until reset of the status bits
			IX9.5	Zero crossing performed	remains until reset of the status bits
			IX9.6	Latch input active	
			IX9.7	reserved	
IB10 IB11	Word	Time stamp			0 ... 65535 µs rotating, updated when counter value changes

1) Internal process data mapping with data format “Standard”. Depending on the fieldbus specification and the data format of the communicating fieldbus components the bytes and/or words can be reversed during data transfer.

Process data[1] outputs UR20-1CNT-100-1DO

Byte	Format	Name	Bit	Function, when edge 0-1	Remark
QB0 ... QB3	Double word	Comparison value			depending on parametrization for triggering of process alarm or setting the DO, as soon as the condition is met
QB4 ... QB7	Double word	Set value			this value is copied into counter value in the event of edge 0-1 at bit 5 of the control word
QB8	Word	Control word	QX8.0	Activate reset mode	
			QX8.1	Release DO	
			QX8.2	Set SW gate	
			QX8.3 - 8.4	reserved	
			QX8.5	Load set value	loads set value into counter value
			QX8.6	Reset status bits	counter status bits 9.1 - 9.5
			QX8.7	reserved	
QB9			QX9.0	Deactivate reset mode	
			QX9.1	Block DO	
			QX9.2	Reset SW gate	
			QX9.3 - 9.7	reserved	

1) Internal process data mapping with data format “Standard”. Depending on the fieldbus specification and the data format of the communicating fieldbus components the bytes and/or words can be reversed during data transfer.

Process alarm data UR20-1CNT-100-1DO

Byte	Bit	Function
B0	X0.0	HW gate activated
	X0.1	HW gate deactivated
	X0.2	Overflow, underflow or end value reached
	X0.3	Comparison value reached
	X0.4	Latch value reached
	X0.5 - 0.7	reserved
B1	X1.0	Status input channel 0 A (track A)
	X1.1	Status input channel 0 B (track B)
	X1.2	Status input "Latch"
	X1.3	Status input "Gate"
	X1.4	Status input "Reset"
	X1.5 - 1.7	reserved
B2		16 bit time stamp 0 ... 65535µs, rotating
B3		

Setting up the counter

To start a counting process at least the signal mode needs to be parameterised and a rising flank at the bit QX8.2 (“Set SW gate”) of the control word is required.
You can define the counter functions by parameterising: the counting mode, a primary direction (counting up or down), the counting behaviour and the hardware gate’s function (input „gate“). In addition you can parameterise output setting options (comparison function, hysteresis) as well as producing a process alarm (see section „additional counter features").

Counting range, count limits

The maximum count limits are predetermined by the register size and cannot be changed.

Maximum counting range

Limit	Value
Lower count limit	–2 147 483 648 (-2^{31})
Upper count limit	+2 147 483 647 ($2^{31}-1$)

Counter functions

Counting mode

Depending on the application you can chose the counting mode:
- Endless counting, e.g. for position detection with a rotary encoder
- 1-time counting with or without primary direction, e.g. for counting products up to a maximum limit
- Periodic counting with or without primary direction, e.g. repeated identical pick-and-place operations

For both counting modes “1-time counting” and “periodic counting” you can parameterise the counting range with load value and end value.

Via bit QX8.5 of the control word you can load a set value into the counting value. You can define the set value in the second double word of the process data outputs.

Counting direction

No primary direction

The entire counting range is available when using a counting mode without primary direction.

Primary direction up

The counting range is limited at the top by a parameterised end value. Starting from 0, a set value or a parameterised load value, the counter counts until the end value -1 and is reset to the load value with the next encoder pulse.

Primary direction down

The counting range is limited at the bottom by a parameterised end value. Starting from 0, a set value or a parameterised load value, the counter counts until the end value +1 and is reset to the load value with the next encoder input.

Gate function: activate/deactivate counter

The counter is activated and deactivated using an internal gate. If the hardware gate (HW gate) is deactivated in the parameters, the internal gate is identical to the software gate (SW gate).
With activated hardware gate, there is a logic AND connection of SW gate and HW gate, so that the gate functions operate exclusively on the HW gate. In this case, opening and closing of the SW gate has an interrupting effect only.
The software gate is activated using a 0-1 edge at the bit “Set SW gate” in the control word and deactivated with a 0-1 edge at the bit “Reset SW gate” in the control word (see table “Process data outputs”).

Counting behaviour: cancel/interrupt counting

You can parameterise the counting behaviour after a new gate start: Using “Interrupt counting”, the counter continues from the last counting value. Using “Cancel counting”, counting starts again from the load value.

Endless counting

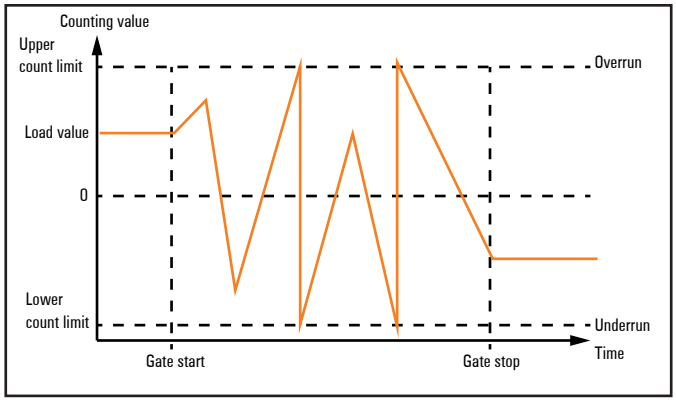

Continous counting

- Counting starts at the load value, the entire counting range is used.
- If the upper count limit is reached during up-counting, an additional counting pulse in the positive direction leads to a jump to the lower count limit. Counting continues from there.
- If the lower count limit is reached during down-counting, an additional counting pulse in the negative direction leads to a jump to the upper count limit. Counting continues from there.
- Upon exceeding the upper or lower counting limit, the status bit “Overflow performed” or “Underflow performed” is set and a process alarm is triggered if it is parameterised. The status bits remain set until they are reset with the bit “Reset status bits” in the control word.

1-time counting / no primary direction

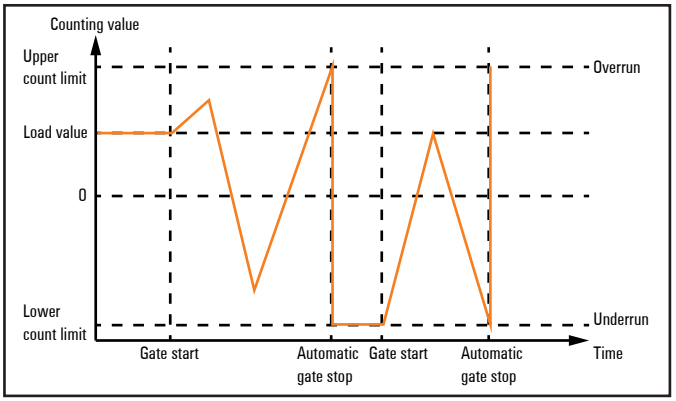

1-time counting, interrupted counting

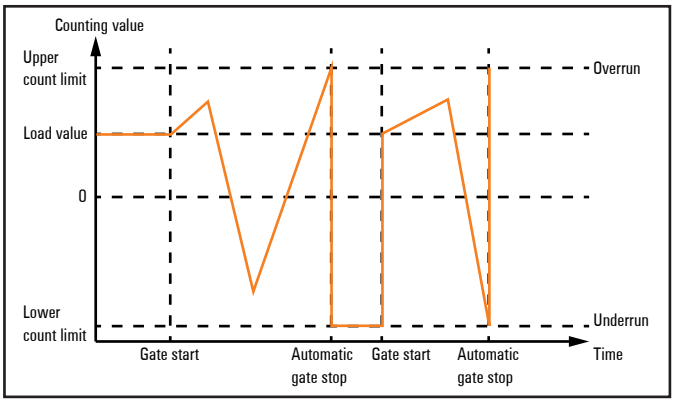

1-time counting, cancelled counting

- Counting (up and down) starts at the load value, the entire counting range is used.
- Upon exceeding the upper or lower count limit, the counter jumps to the other count limit respectively. The internal gate is automatically closed, the status bit “Overflow performed” or “Underflow performed” is set and a process alarm will be triggered if it is parameterised.
- To restart counting, the internal gate must be reopened. Depending on the parameters set, counting continues from the current counting value (“Interrupt counting”) or it starts again from the load value (“Cancel counting”).

1-time counting / primary direction up

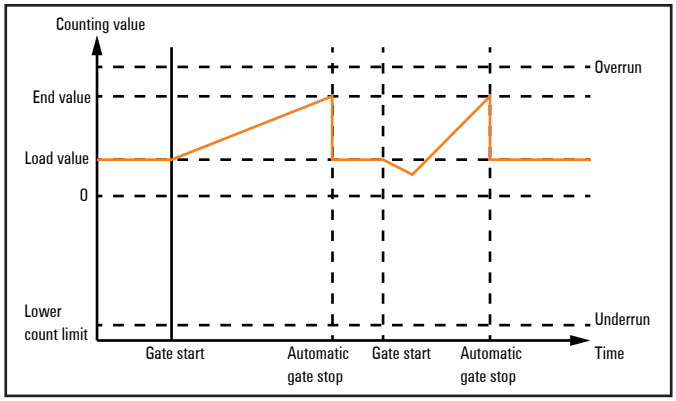

1-time counting, primary counting direction up

- Up-counting starts at the load value.
- If the parametrerised end value -1 is reached during counting in the positive direction, the counter jumps back to the load value at the next positive count pulse. The internal gate is automatically closed, the status bit "End value reached" is set and a process alarm will be triggered if it is parameterised.
- To restart counting, the internal gate must be reopened. Counting starts again at the load value.
- Upon reaching the lower count limit the counter jumps to the upper count limit to continue counting from there. The status bit "Underflow performed" is set and a process alarm will be triggered if it is parameterised. All status bits remain set until they are reset with the bit "Reset status bits" in the control word.

Counting range

Limits	Valid range of values
End value	–2 147 483 647 ($-2^{31}+1$) to +2 147 483 647 ($2^{31}-1$)
Lower count limit	+2 147 483 648 (-2^{31})

1-time counting / primary direction down

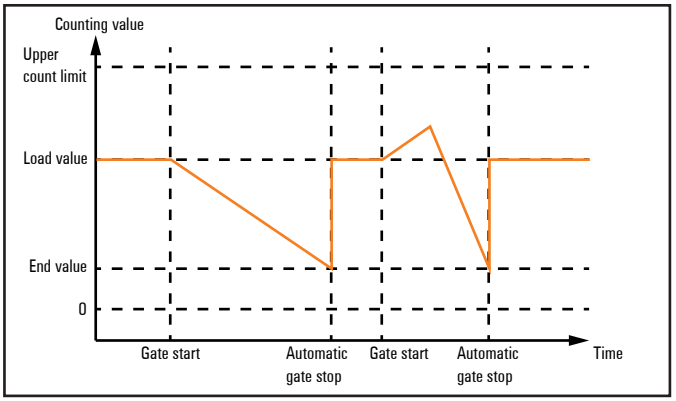

1-time counting, primary count direction down.

- Down-counting starts at the load value.
- If the parametrerised end value +1 is reached during counting in the negative direction, the counter jumps back to the load value at the next count pulse. The internal gate is automatically closed, the status bit "End value reached" is set and a process alarm will be triggered if it is parameterised.
- To restart counting, the internal gate must be reopened. Counting starts again at the load value.
- Upon reaching the upper count limit the counter jumps to the lower count limit to continue counting from there. The status bit "Overflow performed" is set and a process alarm will be triggered if it is parameterised. All status bits remain set until they are reset with the bit "Reset status bits" in the control word.

Counting range

Limits	Valid range of values
End value	–2 147 483 648 (-2^{31}) to +2 147 483 647 ($2^{31}-2$)
Upper count limit	+2 147 483 647 ($2^{31}-1$)

Periodic counting / no primary direction

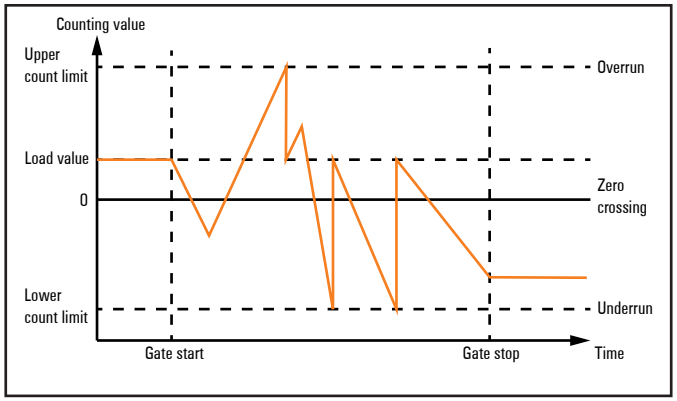

Periodic counting, no primary counting direction

- Counting (up or down) starts at the load value, the entire counting range is used.
- Upon reaching a count limit, the counter jumps to the load value and starts counting again from there. The status bit "Overflow performed" or "Underflow performed" is set and a process alarm will be triggered if it is parameterised. All status bits remain set until they are reset with the bit "Reset status bits" in the control word.

Periodic counting / primary direction up

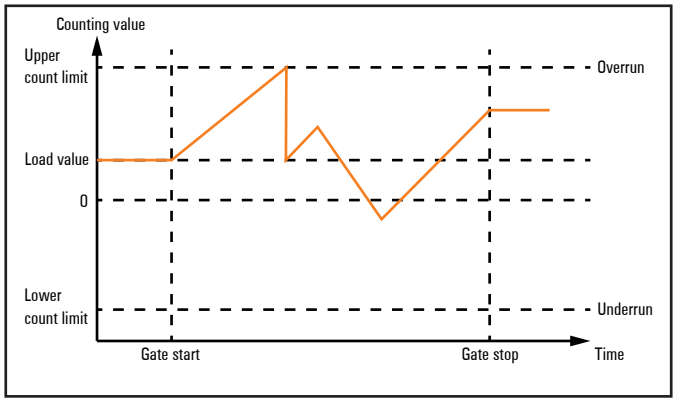

Periodic counting, primary counting direction up.

- Up-counting starts at the load value.
- If the parametrerised end value -1 is reached during counting in the positive direction, the counter jumps back to the load value at the next positive count pulse and continues counting from there. The status bit "End value reached" is set and a process alarm will be triggered if it is parameterised.
- Upon reaching the lower count limit the counter jumps to the upper count limit to continue counting from there. The status bit "Underflow performed" is set and a process alarm will be triggered if it is parameterised. All status bits remain set until they are reset with the bit "Reset status bits" in the control word.

Counting range

Limits	Valid range of values
End value	-2 147 483 647 (-2^{31} +1) to +2 147 483 647 (2^{31} -1)
Lower count limit	+2 147 483 648 (-2^{31})

Periodic counting / primary direction down

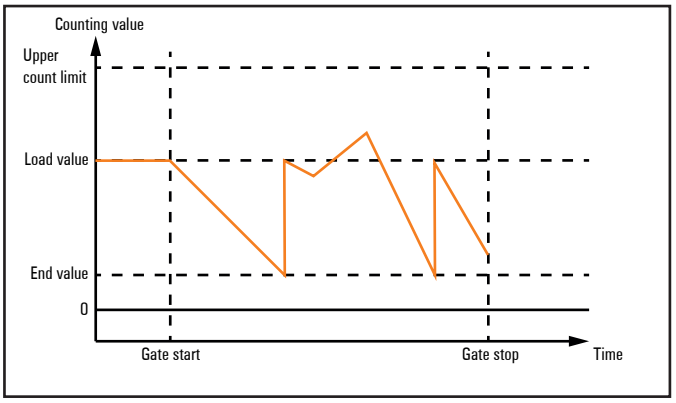

Periodic counting, primary counting direction down.

- Down-counting starts at the load value.
- If the parametrerised end value +1 is reached during counting in the negative direction, the counter jumps back to the load value at the next count pulse and continues counting from there. The status bit "Endvalue reached" is set and a process alarm will be triggered if it is parameterised.
- Upon reaching the upper count limit the counter jumps to the lower count limit to continue counting from there. The status bit "Overflow performed" is set and a process alarm will be triggered if it is parameterised. All status bits remain set until they are reset with the bit "Reset status bits" in the control word.

Counting range

Limits	Valid range of values
End value	-2 147 483 647 (-2^{31}) to +2 147 483 646 (2^{31} -2)
Upper count limit	+2 147 483 647 (2^{31} -1)

Additional counter features

You can define the additional features for the counter listed below by parameterising or via the process data outputs:

- Reset: resets the counting value to the load value during counting.
- Latch function: stores the current counting value in the latch register.
- Comparator: Upon meeting the comparison condition, the digital output is activated or a process alarm is triggered.
- Hysteresis: reduces frequent switching of the output and/or excessive triggering of process alarms, e.g. when the value of a sensor signal fluctuates around the comparison value.

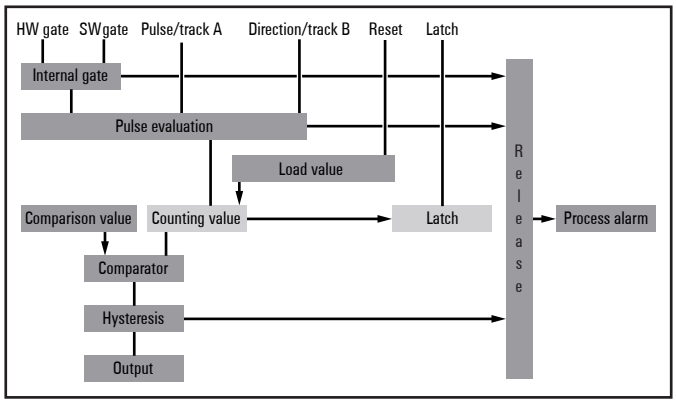

Additional counter functions.

Reset

The load value will be load into the counting value once there is a signal at the reset input. To use this feature you have to release the reset mode in the control word (bit QX8.0) in addition to the parameterisation.
The status bit IX8.3 indicates that there is a signal at the reset input. Once a reset is done, the status bit IX8.0 is set. This bit will be reset by deactivating the reset mode (control bit QX9.0).

Latch function

If a 0-1 edge appears at the latch input, the current counter value is stored in the latch register. The latch register is accessed through the process data inputs. With every activation of the counter the latch value is set to 0.

Comparison function

You can use the parameter „Condition for DO" to deactivate the output („never switching") or define a comparison condition for the output's switching:

- Counter value higher or equal comparison value
- Counter value lower or equal comparison value
- Counter value equal comparison value

To use the comparison function, you have to preset the comparison value in the first double word of the process data outputs and release the digital output via the control word (bit QX8.1).

The bit IX9.1 "Comparison condition met" of the status word is activated as soon as the comparison condition is met. The output switches and remains set as long as the comparison condition is met accordingly to the parameterised hysteresis and pulse duration.

When using „Counter value equal comparison value" the output remains set during the pulse duration parameterised. With pulse duration = 0, the output remains set until the comparison condition is not met any more. When using a counting mode with primary direction, the output will be switched only upon reaching the comparison value from the primary direction.

Pulse duration

You can use the parameter "Pulse duration" to specify how long the digital output should remain set at minimum. The pulse duration can be preselected between 0 and 510 ms with an inaccuracy of less than 2.048 ms. With pulse duration = 0 the output behaves exclusively according to the comparison conditions.

If the comparison value is left during a pulse output and is reached again, there is no post-triggering of the pulse duration.

The bit "Comparison condition met" is activated together with the bit "DO set" of the status word. In contrast to the "DO set" bit it remains active until it is reset with the bit "Reset status bits" of the control word.

Hysteresis

It is possible to reduce frequent switching of the output and/or triggering of a process alarm, e.g. if the value of a sensor signal fluctuates around the comparison value, by setting the hysteresis. Thereby you define a range above and below a reference value (zero crossing, overflow/underflow or comparison value), within which the output will not be reset.

A limit value between 0 and 255 can be parameterised for the hysteresis. With hysteresis = 3 for example, all values differing less than 3 from the reference value are smoothed. Hysteresis is deactivated with the values 0 and 1.

The hysteresis is activated upon reaching the comparison condition. The comparison result remains unchanged during active hysterersis until the counting value reaches the predetermined hysteresis limit. After leaving the hysteresis range, hysteresis is reactivated only upon reaching the comparison condition again.

After changing the hysteresis value, an active hysteresis remains active. The new hysteresis value is actived during the next hysteresis event.

The behaviour of the output for hysteresis = 0 (hysteresis deactivated) and hysteresis = 3 is shown in the following diagrams (legends describe the behaviour for hysteresis = 3):

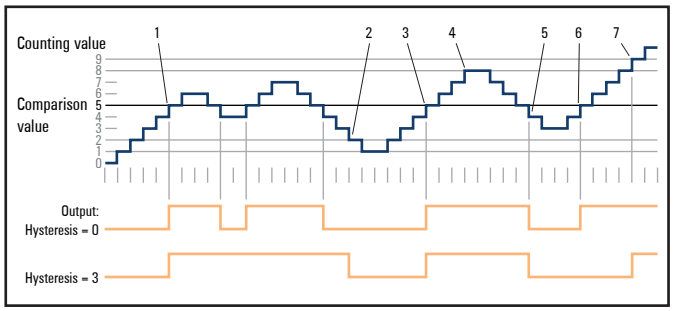

Operating principle of the hysteresis when counter value ≥ comparison value, pulse duration 0

1 Comparison condition met → output is set and hysteresis activated
2 Comparison condition not met, leaving the hysteresis range → output is reset
3 Comparison condition met → output is set and hysteresis activated
4 Leaving the hysteresis range, the output remains set because the comparison condition is still met
5 Comparison condition no longer met but hysteresis still active → output remains set
6 Comparison condition met, hysteresis still active → output remains set
7 Leaving the hysteresis range and comparison condition met → output remains set

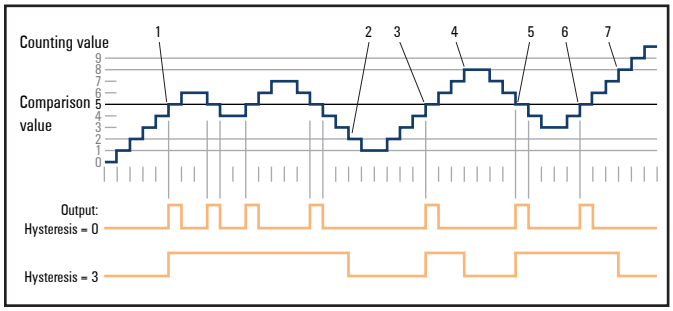

Operating principle of the hysteresis when counter value = comparison value, pulse duration 0

1 Comparison condition met → output is set and hysteresis activated
2 Comparison condition not met, leaving the hysteresis range → output is reset
3 Comparison condition met → output is set and hysteresis activated
4 Leaving the hysteresis range and comparison condition not met → output is reset
5 Comparison condition met → output is set and hysteresis activated
6 Comparison condition met and hysteresis active → output remains set
7 Leaving the hysteresis range and comparison condition no longer met → output is reset

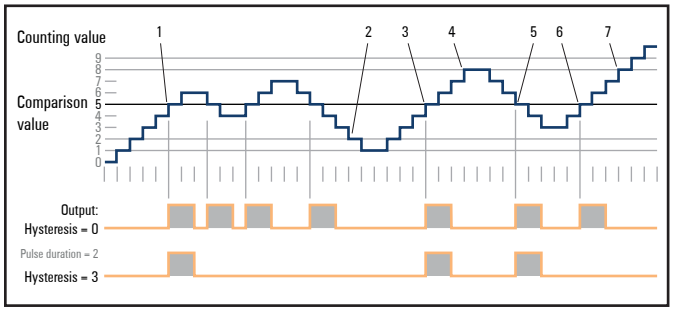

Operating principle of the hysterersis when counter value = comparison value, pulse duration 2

1 Comparison condition met → pulse of the parameterised duration is output, hysteresis activated
2 Leaving the hysteresis range → hysteresis deactivated
3 Comparison condition met → pulse of the parameterised duration is output, hysteresis activated
4 Leaving the hysteresis range → hysteresis deactivated
5 Comparison condition met → pulse of the parameterised duration is output, hysteresis activated
6 Comparison condition met and hysteresis active → no pulse
7 Comparison condition not met, leaving the hysteresis range → hysteresis deactivated

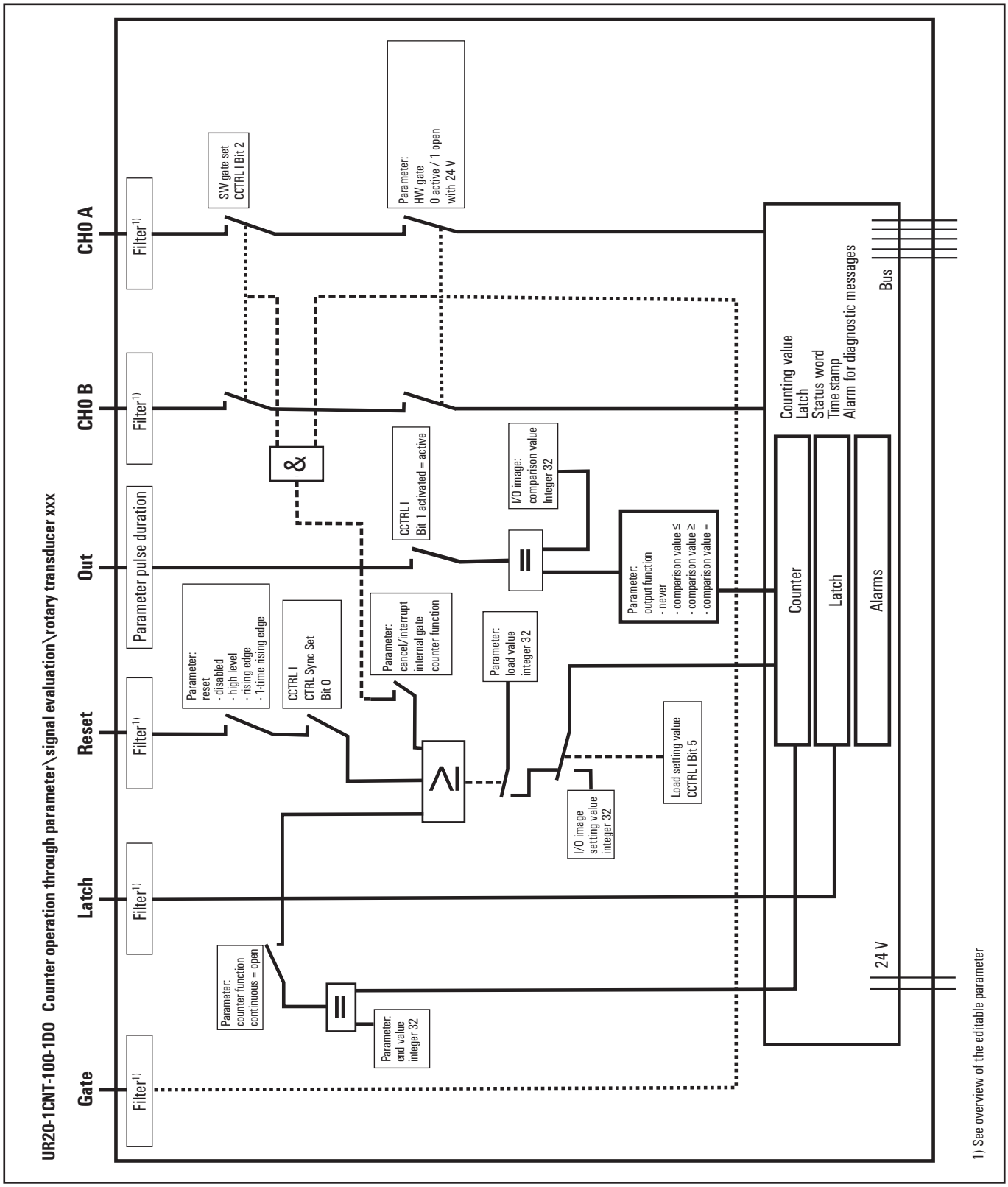
UR20-1CNT-100-1DO Counter operation through parameter\signal evaluation\rotary transducer xxx
Gate
Latch
Reset
Out
CH0 B
CH0 A
Filter1)
Parameter pulse duration
SW gate set
CCTRL I Bit 2
Parameter:
HW gate
0 active / 1 open
with 24 V
&
CCTRL I
Bit 1 activated = active
I/O image:
comparison value
Integer 32
=
Parameter:
output function
- never
- comparison value ≤
- comparison value ≥
- comparison value =
Parameter:
reset
- disabled
- high level
- rising edge
- 1-time rising edge
CCTRL I
CTRL Sync Set
Bit 0
Parameter:
cancel/interrupt
internal gate
counter function
Parameter:
load value
integer 32
Load setting value
CCTRL I Bit 5
I/O image
setting value
integer 32
Parameter:
counter function
continuous = open
Parameter:
end value
integer 32
Counter
Latch
Alarms
Counting value
Latch
Status word
Time stamp
Alarm for diagnostic messages
Bus
24 V
1) See overview of the editable parameter

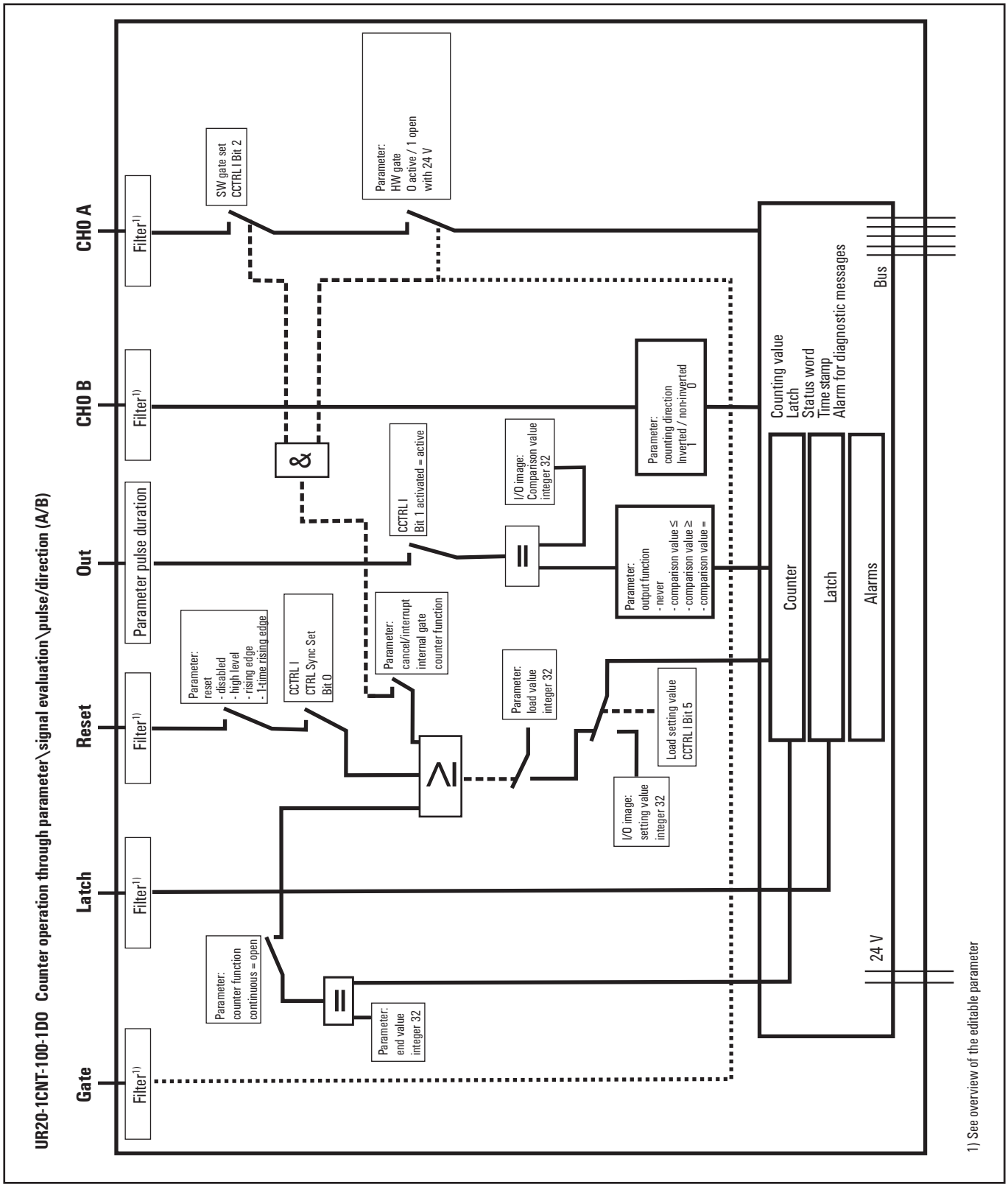
UR20-1CNT-100-1DO Counter operation through parameter\signal evaluation\pulse/direction (A/B)
Gate
Latch
Reset
Out
CH0 B
CH0 A
Filter1)
SW gate set
CCTRL I Bit 2
Parameter:
HW gate
0 active / 1 open
with 24 V
Parameter pulse duration
Parameter:
reset
- disabled
- high level
- rising edge
- 1-time rising edge
CCTRL I
CTRL Sync Set
Bit 0
Parameter:
cancel/interrupt
internal gate
counter function
CCTRL I
Bit 1 activated = active
I/O image:
Comparison value
integer 32
Parameter:
load value
integer 32
Load setting value
CCTRL I Bit 5
I/O image:
setting value
integer 32
Parameter:
output function
- never
- comparison value ≤
- comparison value ≥
- comparison value =
Parameter:
counting direction
Inverted / non-inverted
0
1
Parameter:
counter function
continuous = open
Parameter:
end value
integer 32
Counting value
Latch
Status word
Time stamp
Alarm for diagnostic messages
Bus
Counter
Latch
Alarms
24 V
1) See overview of the editable parameter

6.76 Digital counter module UR20-2CNT-100

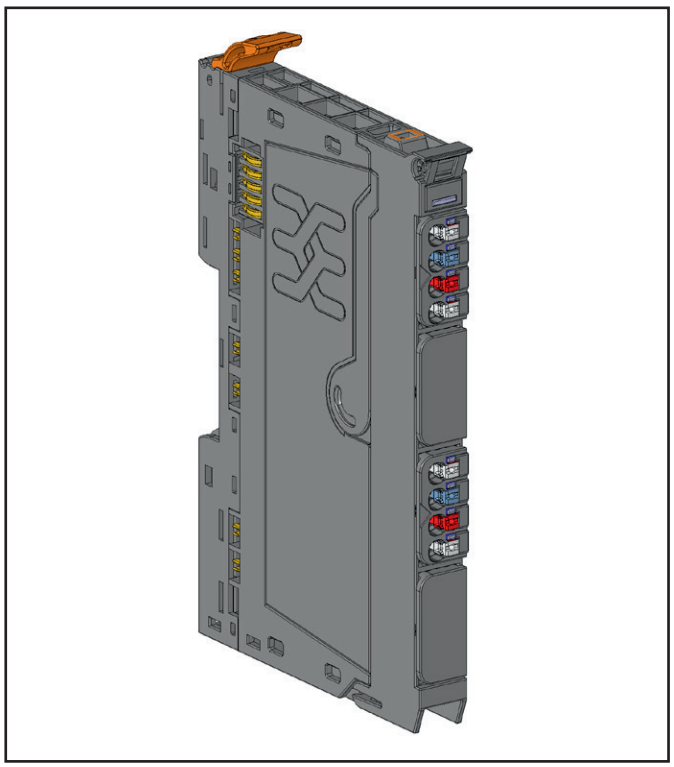

Digital counter module UR20-2CNT-100 (Item No. 1315590000)

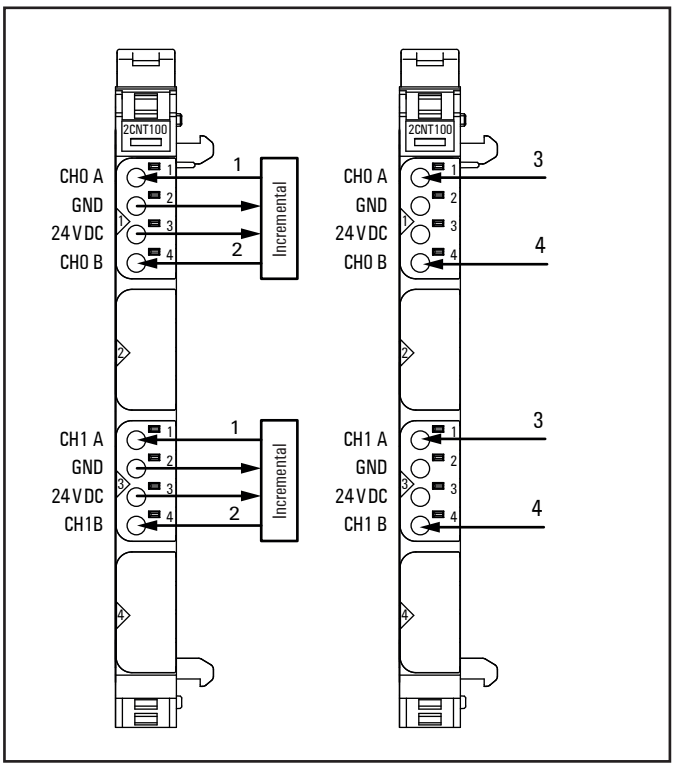

Connection diagram UR20-2CNT-100

The digital counter module UR20-2CNT-100 can read square-wave signals (e.g. from an rotary encoder) with a maximum input frequency of 100 kHz. Depending on the operating mode, both 32-bit counters can count up or down independent of each other in a preset range of values.

In signal mode **Pulse and Direction**, channel CH0 A and CH1 A respectively is used as the input, channel CH0 B and CH1 B respectively is used as a direction-determining input. In **incremental** mode, an incremental encoder with track A and B can be connected.

A status LED is assigned to each channel. The module electronics supply the connected sensors with power from the input current path (I_{IN}).

1 Track A
2 Track B
3 Cycle
4 Direction 0/1 (24 V)

- Two 32-bit counters, 24 V DC
- Counting frequency 100 kHz max (A/B channel, 1/2/4-times sampling or pulse and direction, invertible)
- Input filter (parameterisable)
- Comparison value, set value,
- Alarm and diagnostic function with µs time stamp

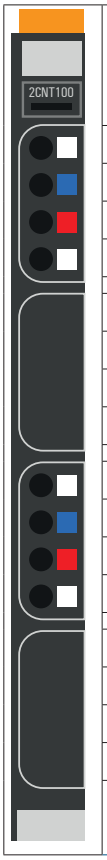

	Module status LED Green: Communication on system bus Red: Error
1.1	Yellow: CH0 A pulse controlled
1.4	Yellow: CH0 B direction controlled
3.1	Yellow: CH1 A pulse controlled
3.4	Yellow: CH1 B direction controlled

LED indicators UR20-2CNT-100, troubleshooting see Chapter 12

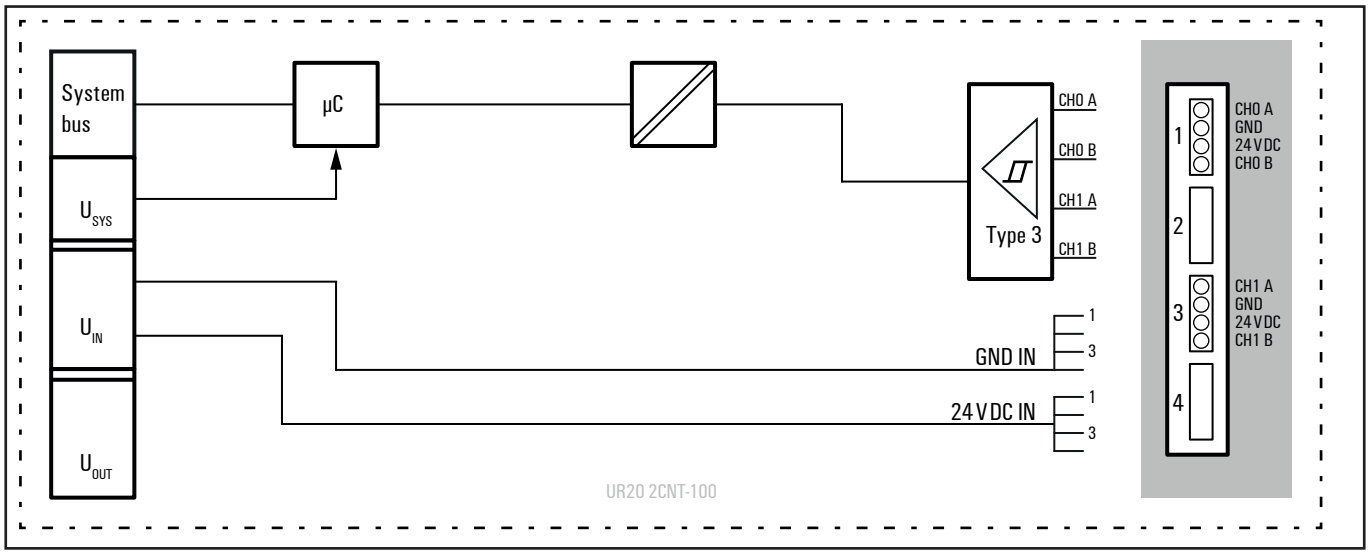

Block diagram UR20-2CNT-100

Technical data UR20-2CNT-100 (Item No. 1315590000)

System data	
Data	Process, parameter and diagnostic data depend on the coupler used, see coupler description.
Interface	u-remote system bus
System bus transfer rate	48 Mbps
Digital inputs	
Number of counter inputs	2
Input type	Input characteristics for sensor types 1 and 3 are in accordance with EN 61131-2, suitable for incremental encoders and others
Input filter	Filter time adjustable from 0.01 to 1 ms
Low input voltage	< 5 V
High input voltage	> 11 V
Max. input current per channel	3.5 mA
Sensor supply	max. 2 A per plug
Sensor connection	2-wire, 3-wire
Reverse polarity protection	yes
Module diagnosis	yes
Individual channel diagnosis	yes
Counter width	32 bits
Maximum input frequency	100 kHz
Mode of operation	Pulse and direction / AB mode with 1-, 2-, 4-times sampling
Status, alarm, diagnostics	
Status indicator	yes
Process alarm	yes, parameterisable
Diagnostic alarm	yes
Supply	
Supply voltage	24 V DC +20 %/-15 %
Current consumption from system current path I_{SYS}	8 mA
Current consumption from input current path I_{IN}	35 mA
General data	
Weight (operational status)	79 g
For additional general data, see Section 3.4	

Overview of the editable parameter UR20-2CNT-100

Channel	Description	Options[1)]	Default
	Diagnostic alarm	disabled (0) / enabled (1)	disabled
0 ... 1	Filter time signal A	0.010 ms [100 kHz] (0) / 0.017 ms [50 kHz] (1) / 0.033 ms [30 kHz] (2) / 0.1 ms [10 kHz] (3) / 0.2 ms [5 kHz] (4) / 0.5 ms [2 kHz] (5) / 1 ms [1 kHz] (6)	0.010 ms [100 kHz]
0 ... 1	Filter time signal B		
0 ... 1	Process alarm overflow	disabled (0) / enabled (1)	disabled
0 ... 1	Process alarm underflow	disabled (0) / enabled (1)	disabled
0 ... 1	Process alarm comp. value	disabled (0) / enabled (1)	disabled
0 ... 1	Process alarm end value	disabled (0) / enabled (1)	disabled
0 ... 1	Counting mode	count endless (0) / once - forward (1) / once - backwards (2) / once - no main direction (3) / periodic - forward (4) / periodic - backwards (5) / periodic - no main direction (6)	count endless
0 ... 1	Comparison function	disabled (0) / higher equal comparison value (1) / lower equal comparison value (2)/ equal comparison value (3)	disabled
0 ... 1	Counter dir. signal B inv.	disabled (0) / enabled (1)	disabled
0 ... 1	Signal mode	Rotary transducer - single (0) / Rotary transducer - double (1) / Rotary transducer - quadruple (2) / Pulse and Direction (3) / Counter disabled (4)	Counter disabled
0 ... 1	Counter behaviour internal gate	Interrupt counting (0) / Cancel counting (1)	Cancel counting
0 ... 1	Setting value	-2147483648 ... 2147483647	0
0 ... 1	End value	-2147483648 ... 2147483647	2147483647
0 ... 1	Load value	-2147483648 ... 2147483647	0
0 ... 1	Hysteresis	0 ... 255	0

1) Values in brackets for Modbus-TCP (firmware version 02.00.00 and higher), CANopen, EtherCAT and EtherNet/IP via module parameter class

The parameter setting in the coupler for the **Output behaviour on fieldbus error** affects the control word and thus the behaviour of the UR20-2CNT-100:

- The **Hold last value** setting
  The counter continues to count during the error. Once normal operating conditions have been restored, the counter continues to count starting at the previous value.
- The **Enable substitute value** setting
  The counter value is frozen. Once normal operating conditions have been restored, the counter value is reset to the parameterised load value.
- **All outputs off** setting
  The counter behaves in the same way as for **Hold last value**.

Diagnostic data UR20-2CNT-100

Name	Bytes	Bit	Description	Default
Error indicator	0	0	Module error	
		1	Internal error	
		2	External error	
		3	Channel error	
		4	External auxiliary supply error	
		5	Reserved	0
		6	Reserved	0
		7	Parameter error	
Module type	1	0	Module Type	0x08
		1		
		2		
		3		
		4	Channel information available	1
		5	Reserved	0
		6	Reserved	0
		7	Reserved	0
Error byte 2	2	0 - 7	Reserved	0
Error byte 3	3	0 - 2	Reserved	0
		3	Internal diagnostic FIFO full	
		4	Reserved	0
		5	Reserved	0
		6	Process alarm lost	
		7	Reserved	0
Channel type	4	0 - 6	Channel type	0x76
		7	Reserved	0
Diagnostic bits per channel	5		Number of diagnostic bit per channel	8
Number of channels	6		Number of similar channels per module	2
Channel error	7	0	Error at channel group 0	
		1	Error at channel group 1	
		2 - 7	Reserved	0
Channel error	8	8 - 15	Reserved	0
Channel error	9	16 - 23	Reserved	0
Channel error	10	24 - 31	Reserved	0
Channel 0 error	11	0 - 1	Reserved	0
		2	Overflow/underflow/end value	
		3	Comparison value reached	
		4 - 7	Reserved	0
Channel 1 error	12	0 - 1	Reserved	0
		2	Overflow/underflow/end value	
		3	Comparison value reached	
		4 - 7	Reserved	0
Channel 2 error to Channel 31 error	13 - 42	0 - 7	Reserved	0
Time stamp	43 - 46		Time stamp [µs] (32 bit)	

Process data[1] inputs UR20-2CNT-100

Byte	Format	Name	Intel	Motorola	Function when active	Remark
IB0 ... IB3	Double word	Counter 0: Counter value				Counter 0: current count value
IB4 ... IB7	Double word	Counter 1: Counter value				Counter 1: current count value
IB8 ... IB9:	Word	Counter 0: Counter status	IX8.0	IX9.0	reserved	
			IX8.1	IX9.1	Comparison bit released	
			IX8.2	IX9.2	SW gate active	
High Byte			IX8.3 - 8.4	IX9.3 - 9.4	reserved	
			IX8.5	IX9.5	internal gate active	
			IX8.6	IX9.6	Comparison bit active	
			IX8.7	IX9.7	Counter direction down	
			IX9.0	IX8.0	Counter direction up	
			IX9.1	IX8.1	Comparison condition met	
			IX9.2	IX8.2	End value reached	
Low Byte			IX9.3	IX8.3	Overflow performed	
			IX9.4	IX8.4	Underflow performed	
			IX9.5	IX8.5	Zero crossing performed	
			IX9.6 - 9.7	IX8.6 - 8.7	reserved	
IB10 ... IB11:	Word	Counter 1: Counter status	IX10.0	IX11.0	reserved	
			IX10.1	IX11.1	Comparison bit released	
			IX10.2	IX11.2	SW gate active	
High Byte			IX10.3 - 10.4	IX11.3 - 11.4	reserved	
			IX10.5	IX11.5	internal gate active	
			IX10.6	IX11.6	Comparison bit active	
			IX10.7	IX11.7	Counter direction down	
			IX11.0	IX10.0	Counter direction up	
			IX11.1	IX10.1	Comparison condition met	
			IX11.2	IX10.2	End value reached	
Low Byte			IX11.3	IX10.3	Overflow performed	
			IX11.4	IX10.4	Underflow performed	
			IX11.5	IX10.5	Zero crossing performed	
			IX11.6 - 11.7	IX10.6 - 10.7	reserved	

1) Depending on the fieldbus specification and the data format of the communicating fieldbus components the bytes and/or words can be reversed during data transfer.

Process data[1] outputs UR20-2CNT-100

Byte	Format	Name	Intel	Motorola	Function, when edge 0-1	Remark
QB0 ... QB3	Double word	Counter 0: Comparison value				
QB4 ... QB7	Double word	Counter 1: Comparison value				
QB8	Word	Counter 0: Control word	QX8.0	QX9.0	reserved	
			QX8.1	QX9.1	Release comparison bit	
			QX8.2	QX9.2	Set SW gate	
			QX8.3 - 8.4	QX9.3 - 9.4	reserved	
			QX8.5	QX9.5	Load set value	Loads set value into counter value
			QX8.6	QX9.6	Reset status bits	Counter 0: status bits 9.1 - 9.5
			QX8.7	QX9.7	reserved	
QB9			QX9.0	QX8.0	reserved	
			QX9.1	QX8.1	Deactivate comparison bit	
			QX9.2	QX8.2	Reset SW gate	
			QX9.3 - 9.7	QX8.3 - 8.7	reserved	
QB10	Word	Counter 1: Control word	QX10.0	QX11.0	reserved	
			QX10.1	QX11.1	Release comparison bit	
			QX10.2	QX11.2	Set SW gate	
			QX10.3 - 10.4	QX11.3 - 11.4	reserved	
			QX10.5	QX11.5	Load set value	Loads set value into counter value
			QX10.6	QX11.6	Reset status bits	Counter 1: status bits 11.1 - 11.5
			QX10.7	QX11.7	reserved	
QB11			QX11.0	QX10.0	reserved	
			QX11.1	QX10.1	Deactivate comparison bit	
			QX11.2	QX10.2	Reset SW gate	
			QX11.3 - 11.7	QX10.3 - 10.7	reserved	

1) Internal process data mapping with data format “Standard”. Depending on the fieldbus specification and the data format of the communicating fieldbus components the bytes and/or words can be reversed during data transfer.

Process alarm data UR20-2CNT-100

Byte	Bit	Function
B0	X0.0 - 0.1	reserved
	X0.2	Counter 0: Overflow, underflow or end value reached
	X0.3	Counter 0: Comparison value reached
	X0.4 - 0.5	reserved
	X0.6	Counter 1: Overflow, underflow or end value reached
	X0.7	Counter 1: Comparison value reached
B1	X1.0	Status Counter 0: Input channel 0 A (track A)
	X1.1	Status Counter 0: Input channel 0 B (track B)
	X1.2	Status Counter 1: Input channel 0 A (track A)
	X1.3	Status Counter 1: Input channel 0 B (track B)
	X1.4 - 1.7	reserved
B2		16 Bit Time stamp 0 ... 65535µs, rotating
B3		

Setting up the counter

To start a counting process at least the signal mode needs to be parameterised and a rising flank at the bit QX8.2 or QX10.2 respectively ("Set SW gate") of the control word is required.
You can define the counter functions by parameterising: the counting mode, a primary direction (counting up or down), and the counting behaviour. In addition you can parameterise options for setting a comparison bit (conditions, hysteresis) as well as producing a process alarm (see section „additional counter features").

Counting range, count limits

The maximum count limits are predetermined by the register size and cannot be changed.

Maximum counting range

Limit	Value
Lower count limit	-2 147 483 648 (-2^{31})
Upper count limit	+2 147 483 647 ($2^{31}-1$)

Counter functions

Counting mode

Depending on the application you can chose the counting mode:
- Endless counting, e.g. for detecting the position with a rotary encoder
- 1-time counting with or without primary direction, e.g. for counting products up to a maximum limit
- Periodic counting with or without primary direction, e.g. repeated identical pick-and-place operations

For both counting modes "1-time counting" and "periodic counting" you can parameterise the counting range with load value and end value.

Via bit QX8.5 or QX10.5 respectively of the control word you can load a set value into the counting value. You can define the set value in the module parameters.

Counting direction

No primary direction

The entire counting range is available when using a counting mode without primary direction.

Primary direction up

The counting range is limited at the top by a parameterised end value. Starting from 0, a set value or a parameterised load value, the counter counts until the end value -1 and is reset to the load value with the next encoder pulse.

Primary direction down

The counting range is limited at the bottom by a parameterised end value. Starting from 0, a set value or a parameterised load value, the counter counts until the end value +1 and is reset to the load value with the next encoder pulse.

Gate function: activate / deactivate counter

The counter is activated and deactivated using an internal gate. The internal gate is identical to the software gate (SW gate), it is activated using a 0-1 edge at the bit "Set SW gate" in the control word and deactivated with a 0-1 edge at the bit "Reset SW gate" in the control word (see table "Process data outputs").

Counting bahaviour: interrupt / cancel counting

You can parameterise the counting behaviour after a new gate start: Using "Interrupt counting", the counter continues from the last counting value. Using "Cancel counting", counting starts again from the load value.

Endless counting

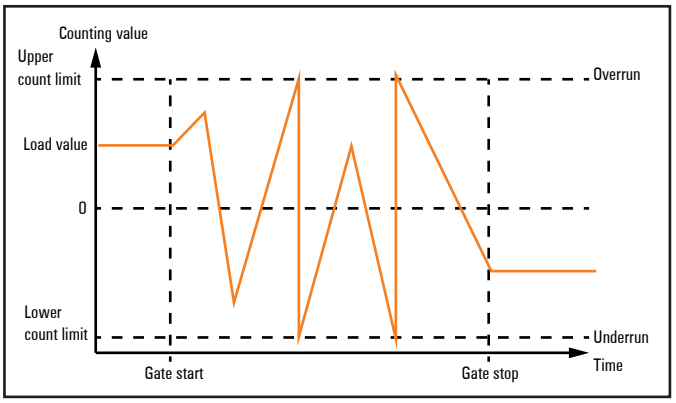

Continous counting

- Counting starts at the load value, the entire counting range is used.
- If the upper count limit is reached during up-counting, an additional counting pulse in the positive direction leads to a jump to the lower count limit. Counting continues from there.
- If the lower count limit is reached during down-counting, an additional counting pulse in the negative direction leads to a jump to the upper count limit. Counting continues from there.
- Upon exceeding the upper or lower counting limit, the status bit "Overflow performed" or "Underflow performed" is set and a process alarm is triggered if it is parameterised. The status bits remain set until they are reset with the bit "Reset status bits" in the control word.

1-time counting / no primary direction

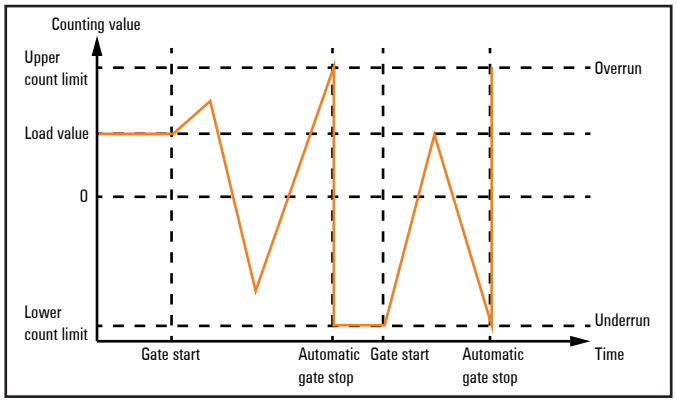

1-time counting, interrupted counting

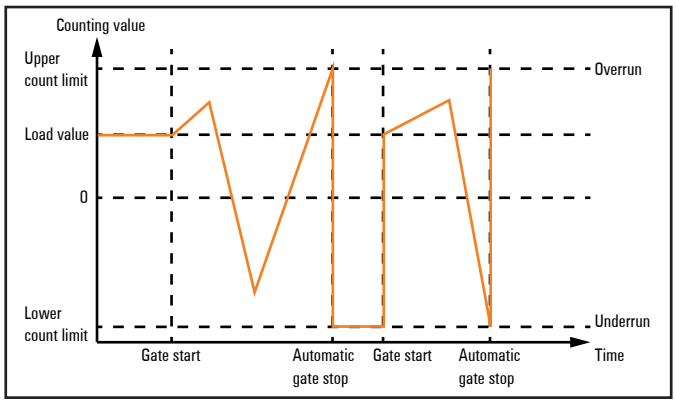

1-time counting, cancelled counting

- Counting (up and down) starts at the load value, the entire counting range is used.
- Upon exceeding the upper or lower count limit, the counter jumps to the other count limit respectively. The internal gate is automatically closed, the status bit “Overflow performed” or “Underflow performed” is set and a process alarm will be triggered if it is parameterised.
- To restart counting, the internal gate must be reopened. Depending on the parameters set, counting continues from the current counting value (“Interrupt counting”) or it starts again from the load value (“Cancel counting”).

1-time counting / primary direction up

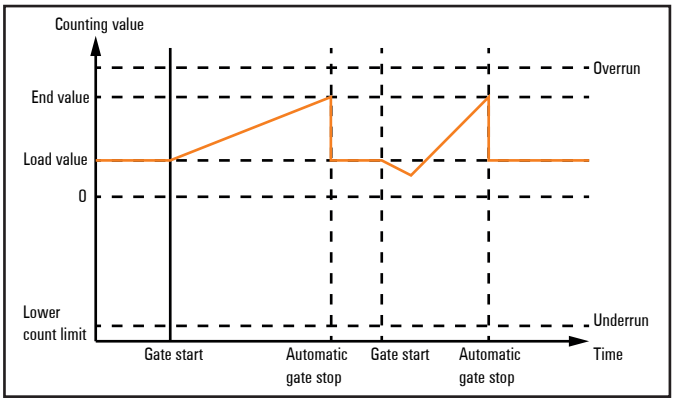

1-time counting, primary direction up

- Up-counting starts at the load value.
- If the parametrerised end value -1 is reached during counting in the positive direction, the counter jumps back to the load value at the next positive count pulse. The internal gate is automatically closed, the status bit "End value reached" is set and a process alarm will be triggered if it is parameterised.
- To restart counting, the internal gate must be reopened. Counting starts again at the load value.
- Upon reaching the lower count limit the counter jumps to the upper count limit to continue counting from there. The status bit "Underflow performed" is set and a process alarm will be triggered if it is parameterised. All status bits remain set until they are reset with the bit "Reset status bits" in the control word.

Counting range

Limits	Valid range of values
End value	-2 147 483 647 ($-2^{31}+1$) to +2 147 483 647 ($2^{31}-1$)
Lower count limit	+2 147 483 648 (-2^{31})

1-time counting / primary direction down

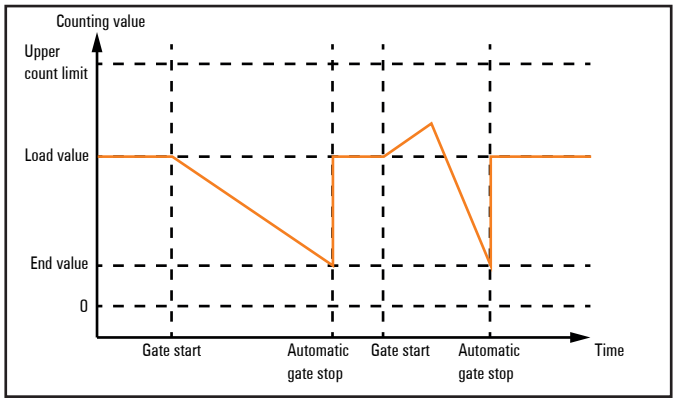

1-time counting, primary count down.

- Down-counting starts at the load value.
- If the parametrerised end value +1 is reached during counting in the negative direction, the counter jumps back to the load value at the next count pulse. The internal gate is automatically closed, the status bit "End value reached" is set and a process alarm will be triggered if it is parameterised.
- To restart counting, the internal gate must be reopened. Counting starts again at the load value.
- Upon reaching the upper count limit the counter jumps to the lower count limit to continue counting from there. The status bit "Overflow performed" is set and a process alarm will be triggered if it is parameterised. All status bits remain set until they are reset with the bit "Reset status bits" in the control word.

Counting range

Limits	Valid range of values
End value	-2 147 483 648 (-2^{31}) to +2 147 483 647 ($2^{31}-2$)
Upper count limit	+2 147 483 647 ($2^{31}-1$)

Periodic counting / no primary direction

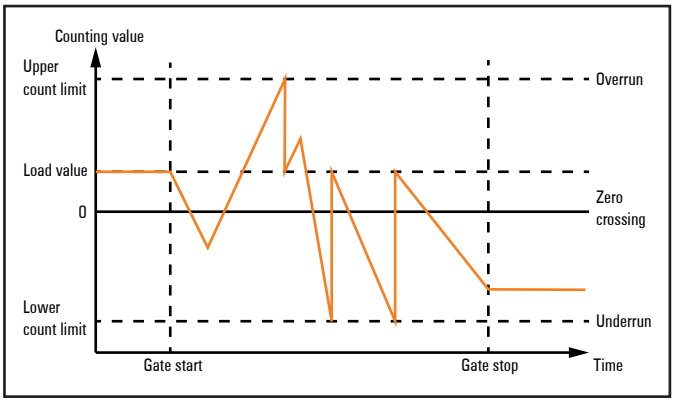

Periodic counting, no primary direction

- Counting (up or down) starts at the load value, the entire counting range is used.
- Upon reaching a count limit, the counter jumps back to the load value and starts counting again from there. The status bit "Overflow performed" or "Underflow performed" is set and a process alarm will be triggered if it is parameterised. All status bits remain set until they are reset with the bit "Reset status bits" in the control word.

Periodic counting / primary direction up

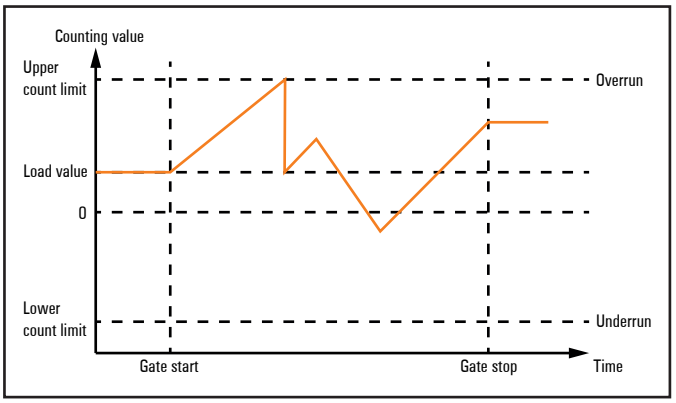

Periodic counting, primary direction up.

- Up-counting starts at the load value.
- If the parameterised end value -1 is reached during counting in the positive direction, the counter jumps back to the load value at the next positive count pulse and continues counting from there. The status bit "End value reached" is set and a process alarm will be triggered if it is parameterised.
- Upon reaching the lower count limit the counter jumps to the upper count limit to continue counting from there. The status bit "Underflow performed" is set and a process alarm will be triggered if it is parameterised. All status bits remain set until they are reset with the bit "Reset status bits" in the control word.

Counting range

Limits	Valid range of values
End value	-2 147 483 647 (-2^{31} +1) to +2 147 483 647 (2^{31}-1)
Lower count limit	+2 147 483 648 (-2^{31})

Periodic counting / primary direction down

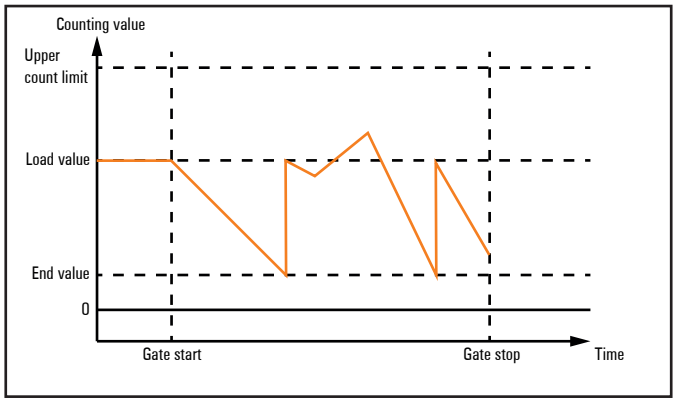

Periodic counting, primary direction down.

- Down-counting starts at the load value.
- If the parameterised end value +1 is reached during counting in the negative direction, the counter jumps back to the load value at the next count pulse and continues counting from there. The status bit "End value reached" is set and a process alarm will be triggered if it is parameterised.
- Upon reaching the upper count limit the counter jumps to the lower count limit to continue counting from there. The status bit "Overflow performed" is set and a process alarm will be triggered if it is parameterised. All status bits remain set until they are reset with the bit "Reset status bits" in the control word.

Counting range

Limits	Valid range of values
End value	-2 147 483 647 (-2^{31}) to +2 147 483 646 (2^{31}-2)
Upper count limit	+2 147 483 647 (2^{31}-1)

Additional counter features

You can define the additional features for the counter listed below by parametrising or via the process data outputs:

- Reset: resets the counting value to the load value during counting.
- Comparator: Upon meeting the comparison condition, the comparison bit is activated or a process alarm is triggered.
- Hysteresis: reduces frequent toggling of the comparison bit and/or excessive triggering of a process alarm, e.g. when the value of a sensor signal fluctuates around the comparison value.

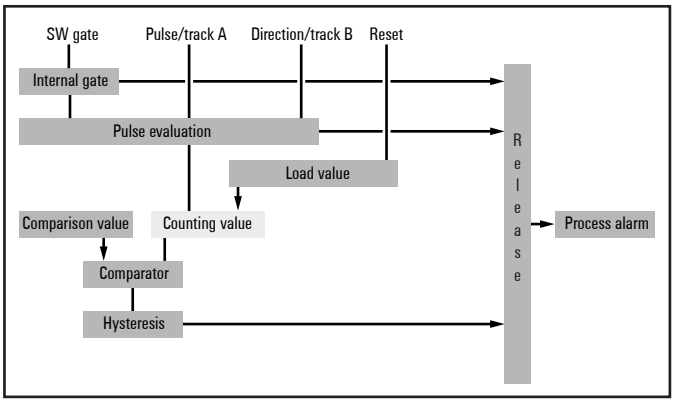

Additional counter functions.

Comparison function

Via the parameter „Comparison function“ you can deactivate the comparison function or define a comparison condition:

- Counter value higher or equal comparison value
- Counter value lower or equal comparison value
- Counter value equal comparison value

To use the comparison function, you have to preset the comparison values for both counting channels in the respective first double word of the process data outputs and to set the bit QX8.1 and QX10.1 respectively ("Comparison bit released") in each control word.

As soon as the counting value meets the corresponding comparison condition, the bits "Comparison bit active" and "Comparison condition met" are activated. The bit "Comparison bit active" remains set as long as the comparison condition is being met (respectively the parameterised hysteresis). The bit "Comparison condition met" remains active until it will be reset with the bit "Reset of the status bits" in the control word.

When using a counting mode with primary direction, the comparison bit will be set only upon reaching the comparison value from the primary direction.

Hysteresis

It is possible to reduce frequent triggering of a process alarm and toggling of the comparison bit (e.g. if the value of a sensor signal fluctuates around the comparison value), by setting the hysteresis. Thereby you define a range above and below a reference value (zero crossing, overflow/underflow and comparison value), within which the status bit will not be reset.
A limit value between 0 and 255 can be parameterised for the hysteresis. With hysteresis = 3 for example, all values differing less than 3 from the reference value are smoothed. Hysteresis is deactivated with the values 0 and 1.
The hysteresis is activated upon reaching the comparison condition. The comparison result remains unchanged during active hysterersis until the counting value reaches the predetermined hysteresis limit. After leaving the hysteresis range, hysteresis is reactivated only upon reaching the comparison condition again.
After changing the hysteresis value, an active hysteresis remains active. The new hysteresis value is actived during the next hysteresis event.
The behaviour of the status bit for hysteresis = 0 (hysteresis deactivated) and hysteresis = 3 is shown in the following diagrams (legends describe the behaviour for hysteresis = 3)::

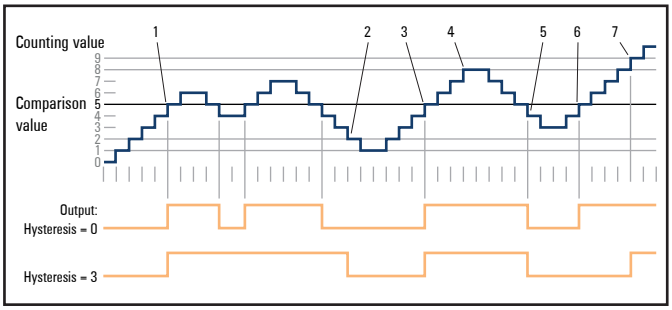

Operating principle of the hysteresis with counter value ≥ comparison value

1 Comparison condition met → status bit is set and hysteresis activated
2 Comparison condition not met, leaving the hysteresis range → status bit is reset
3 Comparison condition met → status bit is set and hysteresis activated
4 Leaving the hysteresis range, the status bit remains set because the comparison condition is still met
5 Comparison condition no longer met but hysteresis still active → status bit remains set
6 Comparison condition met, hysteresis still active → status bit remains set
7 Leaving the hysteresis range and comparison condition met → status bit remains set

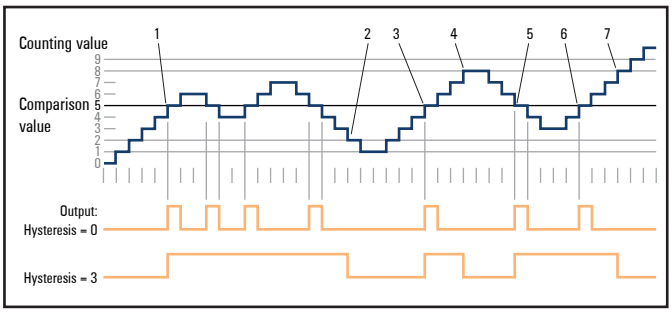

Operating principle of the hysteresis whit counter value = comparison value

1 Comparison condition met → status bit is set and hysteresis activated
2 Comparison condition not met, leaving the hysteresis range → status bit is reset
3 Comparison condition met → status bit is set and hysteresis activated
4 Leaving the hysteresis range and comparison condition not met → status bit is reset
5 Comparison condition met → status bit is set and hysteresis activated
6 Comparison condition met and hysteresis active → status bit remains set
7 Leaving the hysteresis range and comparison condition no longer met → status bit is reset

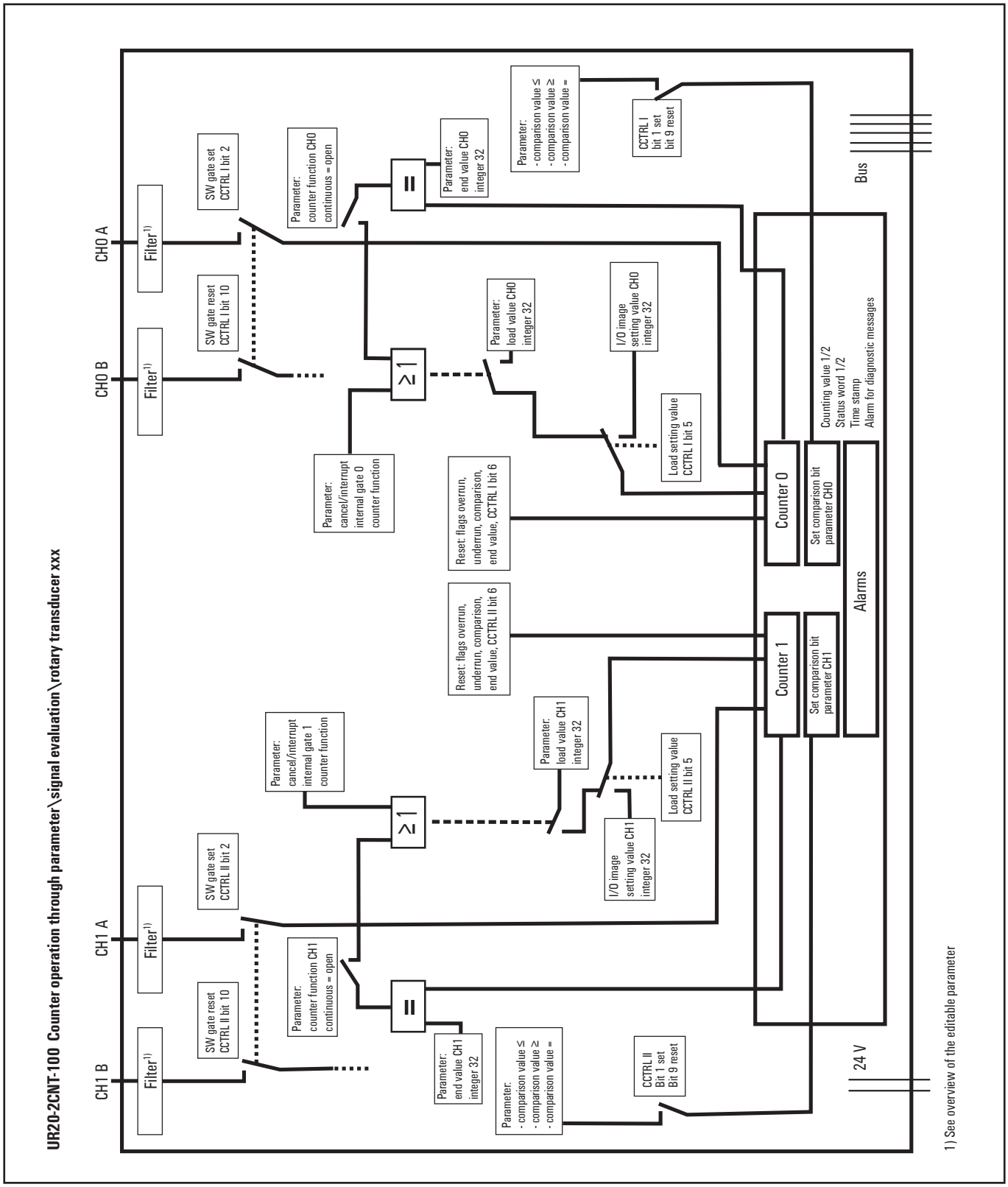
UR20-2CNT-100 Counter operation through parameter\signal evaluation\rotary transducer xxx
CH0 A
CH0 B
CH1 A
CH1 B
Filter1)
SW gate set CCTRL I bit 2
SW gate reset CCTRL I bit 10
SW gate set CCTRL II bit 2
SW gate reset CCTRL II bit 10
Parameter: counter function CH0 continuous = open
Parameter: counter function CH1 continuous = open
=
≥1
Parameter: end value CH0 integer 32
Parameter: end value CH1 integer 32
Parameter: - comparison value ≤ - comparison value ≥ - comparison value =
CCTRL I bit 1 set bit 9 reset
CCTRL II Bit 1 set Bit 9 reset
Parameter: load value CH0 integer 32
Parameter: load value CH1 integer 32
I/O image setting value CH0 integer 32
I/O image setting value CH1 integer 32
Load setting value CCTRL I bit 5
Load setting value CCTRL II bit 5
Parameter: cancel/interrupt internal gate 0 counter function
Parameter: cancel/interrupt internal gate 1 counter function
Reset: flags overrun, underrun, comparison, end value, CCTRL I bit 6
Reset: flags overrun, underrun, comparison, end value, CCTRL II bit 6
Counter 0
Counter 1
Set comparison bit parameter CH0
Set comparison bit parameter CH1
Alarms
Counting value 1/2
Status word 1/2
Time stamp
Alarm for diagnostic messages
Bus
24 V
1) See overview of the editable parameter

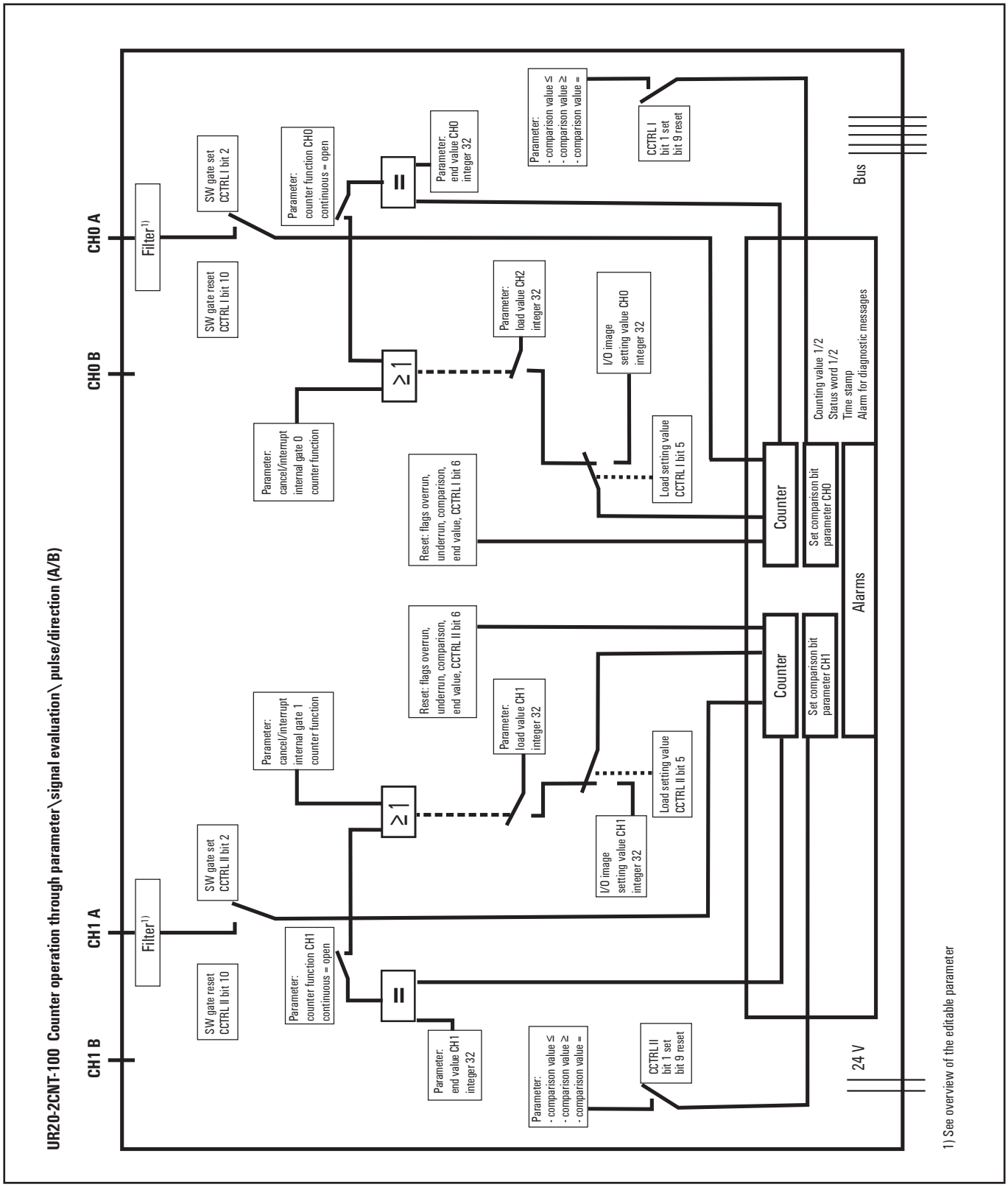
UR20-2CNT-100 Counter operation through parameter\signal evaluation\ pulse/direction (A/B)
CH0 A
CH0 B
CH1 A
CH1 B
Filter 1)
SW gate set CCTRL I bit 2
SW gate reset CCTRL I bit 10
Parameter: counter function CH0 continuous = open
=
Parameter: end value CH0 integer 32
Parameter: - comparison value ≤ - comparison value ≥ - comparison value =
CCTRL I bit 1 set bit 9 reset
Bus
≥1
Parameter: load value CH2 integer 32
I/O image setting value CH0 integer 32
Parameter: cancel/interrupt internal gate 0 counter function
Load setting value CCTRL I bit 5
Reset: flags overrun, underrun, comparison, end value, CCTRL I bit 6
Counter
Counting value 1/2
Status word 1/2
Time stamp
Alarm for diagnostic messages
Set comparison bit parameter CH0
Alarms
Reset: flags overrun, underrun, comparison, end value, CCTRL II bit 6
Counter
Parameter: load value CH1 integer 32
Parameter: cancel/interrupt internal gate 1 counter function
Load setting value CCTRL II bit 5
Set comparison bit parameter CH1
I/O image setting value CH1 integer 32
SW gate set CCTRL II bit 2
SW gate reset CCTRL II bit 10
Parameter: counter function CH1 continuous = open
Parameter: end value CH1 integer 32
Parameter: - comparison value ≤ - comparison value ≥ - comparison value =
CCTRL II bit 1 set bit 9 reset
24 V
1) See overview of the editable parameter

6.77 Digital counter module UR20-1CNT-500

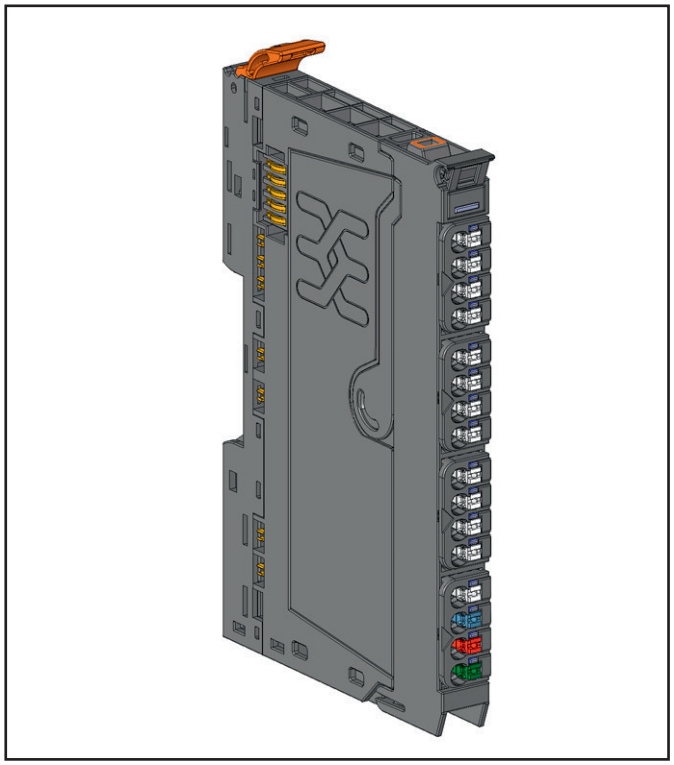

Digital counter module UR20-1CNT-500 (Item No. 1315580000)

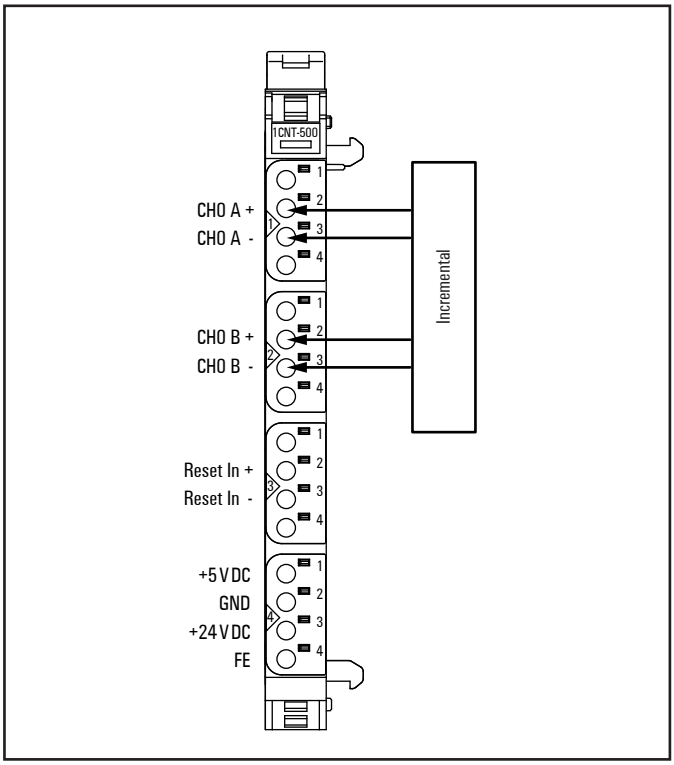

Connection diagram UR20-1CNT-500

The digital counter module UR20-1CNT-500 includes a RS422 interface for recording difference signals (e.g. from an differential rotary encoder) with a maximum frequency of 500 kHz. The 32-bit counter can count up or down in a preset range of values. The counter's basic functions are controlled by the coupler. Via a reset the counitng value can be set to zero.

In signal mode **Pulse and Direction**, channel CH0 A is used as the input, channel CH0 B is used as a direction-determining input. In **incremental** mode, an rotary encoder with track A and B can be connected.

A status LED is assigned to each channel. The module electronics supply the connected sensors with 5 V DC or 24 V DC from the input current path (I_{IN}).

- One 32-bit counter, invertible, RS422
- Counting frequency 500 kHz max. (A/B channel, 1/2/4-times sampling or pulse and direction)
- input filter (parametrisable)
- Comparison value, set value
- Alarm and diagnostic function with µs time stamp
- µs time stamp for value counting (e.g. for speed measurements)

Twisted-pair cables with additional foilscreen (SF/UTP) have to be used to connect the rotary transducer.

Please note for pins 1 to 3: The (+) signals are present on connectors 1 and 2 respectively, the (–) signals on connectors 3 and 4 respectively. Terminating resistors can be connected to the respective free connectors.

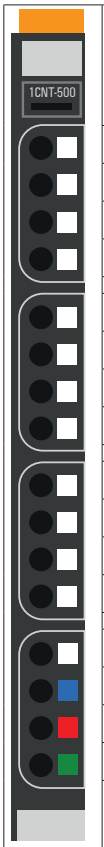

	Module status LED Green: Communication on system bus Red: Error
1.1	Yellow: CH0 A active
2.1	Yellow: CH0 B active
3.1	Yellow: Reset In active
4.1	Green: sensor supply + 5 V
4.3	Green: sensor supply + 24 V

LED indicators UR20-1CNT-500, troubleshooting see Chapter 12

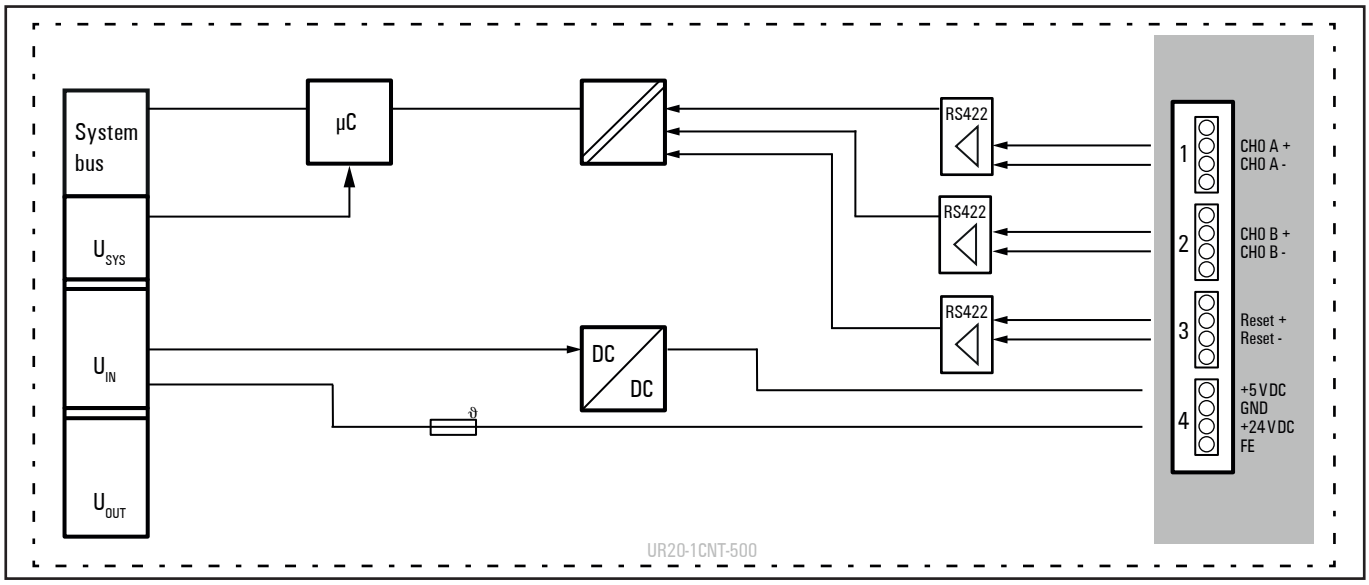

Block diagram UR20-1CNT-500

Technical data UR20-1CNT-500 (Item No. 1315580000)

System data	
Data	Process, parameter and diagnostic data depend on the coupler used, see coupler description.
Interface	u-remote system bus
System bus transfer rate	48 Mbps
Digital inputs	
Number of counter inputs	1
Input type	RS422, suitable for diffential rotary encoders
Input filter	Filter time adjustable from 1.3 µs to 1 ms
Dielectric strength	up to 30 V DC max.
Sensor supply	500 mA max. (feed-in 24 V); 400 mA max. (feed-in 5 V)
Short-circuit-proof	yes
Reverse polarity protection	yes
Module diagnosis	yes
Individual channel diagnosis	no
Counter width	32 bits
Maximum input frequency	500 kHz
Mode of operation	Pulse and direction / AB mode with 1-, 2-, 4-times sampling
Status, alarm, diagnostics	
Status indicator	yes
Process alarm	yes, parameterisable
Diagnostic alarm	yes
Supply	
Supply voltage	24 V DC +20 %/-15 %
Current consumption from system current path I_{SYS}	8 mA
Current consumption from input current path I_{IN}	20 mA
General data	
Weight (operational status)	72 g
For additional general data, see Section 3.4	

Overview of the editable parameter UR20-1CNT-500

Channel	Description	Options[1)]	Default
	Diagnostic alarm	disabled (0) / enabled (1)	disabled
0	Filter time signal A	0.0013 ms [750 kHz] (0) / 0.0026 ms [375 kHz] (1) / 0.010 ms [100 kHz] (2) / 0.017 ms [50 kHz] (3) / 0.033 ms [30 kHz] (4) / 0.1 ms [10 kHz] (5) / 0.2 ms [5 kHz] (6) / 0.5 ms [2 kHz] (7) / 1 ms [1 kHz] (8)	0.0013 ms [750 kHz]
0	Filter time signal B		
0	Filter time reset		
0	Process alarm overflow	disabled (0) / enabled (1)	disabled
0	Process alarm underflow	disabled (0) / enabled (1)	disabled
0	Process alarm comp. value	disabled (0) / enabled (1)	disabled
0	Process alarm end value	disabled (0) / enabled (1)	disabled
0	Counting mode	count endless (0) / once - forward (1) / once - backwards (2) / once - no main direction (3) / periodic - forward (4) / periodic - backwards (5) / periodic - no main direction (6)	count endless
0	Comparison function	disabled (0) / higher equal comparison value (1) / lower equal comparison value (2)/ equal comparison value (3)	disabled
0	Counter dir. signal B inv.	disabled (0) / enabled (1)	disabled
0	Reset	disabled (0) / high level (1) / rising edge 0-1 (2)/ rising edge once 0-1 (3)	disabled
0	Signal mode	Rotary transducer - single (0) / Rotary transducer - double (1) / Rotary transducer - quadruple (2) / Pulse and Direction (3) / Counter disabled (4)	Counter disabled
0	Counter behaviour internal gate	Interrupt counting (0) / Cancel counting (1)	Cancel counting
0	Setting value	-2147483648 ... 2147483647	0
0	End value	-2147483648 ... 2147483647	2147483647
0	Load value	-2147483648 ... 2147483647	0
0	Hysteresis	0 ... 255	0

1) Values in brackets for Modbus-TCP (firmware version 02.00.00 and higher), CANopen, EtherCAT and EtherNet/IP via module parameter class

The parameter setting in the coupler for the **Output behaviour on fieldbus error** affects the control word and thus the behaviour of the UR20-1CNT-500:

- The **Hold last value** setting
  The counter continues to count during the error. Once normal operating conditions have been restored, the counter continues to count starting at the previous value.
- The **Enable substitute value** setting
  The counter value is frozen. Once normal operating conditions have been restored, the counter value is reset to the parameterised load value.
- **All outputs off** setting
  The counter behaves in the same way as for **Hold last value**.

Diagnostic data UR20-1CNT-500

Name	Bytes	Bit	Description	Default
Error indicator	0	0	Module error	
		1	Internal error	
		2	External error	
		3	Channel error	
		4	External auxiliary supply error	
		5	Reserved	0
		6	Reserved	0
		7	Parameter error	
Module type	1	0	Module Type	0x08
		1		
		2		
		3		
		4	Reserved	1
		5	Reserved	0
		6	Reserved	0
		7	Reserved	0
Error byte 2	2	0 - 7	Reserved	0
Error byte 3	3	0 - 2	Reserved	0
		3	Internal diagnostic FIFO full	
		4	Reserved	0
		5	Reserved	0
		6	Process alarm lost	0
		7	Reserved	0
Channel type	4	0 - 6	Channel type	0x76
		7	Reserved	0
Diagnostic bits per channel	5		Number of diagnostic bit per channel	8
Number of channels	6		Number of similar channels per module	1
Channel error	7	0	Error at channel 0	
		1 - 7	Reserved	0
Channel error	8	8 - 15	Reserved	0
Channel error	9	16 - 23	Reserved	0
Channel error	10	24 - 31	Reserved	0
Channel 0 error	11	0 - 1	Reserved	0
		2	Overflow/underflow/end value	
		3	Comparison value reached	
		4 - 7	Reserved	0
Channel 1 error to Channel 31 error	12 - 42	0 - 7	Reserved	0
Time stamp	43 - 46		Time stamp [µs] (32 bit)	

Process data[1] inputs UR20-1CNT-500

Byte	Format	Name	Bit	Function when active	Remark
IB0 ...IB3	Double word	Counter value			current counter value
IB4	Word	Counter status	IX4.0	Reset was active	remains until reset mode is deactivated
			IX4.1	Comparison bit released	is set when comparison bit is activated
			IX4.2	status SW gate	is set when SW gate active
			IX4.3	Reset input active	depending only of the parameter „reset“ but not of the reset mode
			IX4.4	reserved	
			IX4.5	status internal gate	is set when internal gate active
			IX4.6	status comparison bit	
			IX4.7	Counter direction down	
IB5			IX5.0	Counter direction up	
			IX5.1	Comparison condition met	remains until reset of the status bits
			IX5.2	End value reached	remains until reset of the status bits
			IX5.3	Overflow performed	remains until reset of the status bits
			IX5.4	Underflow performed	remains until reset of the status bits
			IX5.5	Zero crossing performed	remains until reset of the status bits
			IX5.6	reserved	
			IX5.7	reserved	
IB6	Word	Time stamp	16 Bit		0 ... 65535 µs rotating, updated when counter value changes
IB7					

1) Internal process data mapping with data format “Standard”. Depending on the fieldbus specification and the data format of the communicating fieldbus components the bytes and/or words can be reversed during data transfer.

Process data[1] outputs UR20-1CNT-500

Byte	Format	Name	Bit	Function, when edge 0-1	Remark
QB0 ... QB3	Double word	Comparison value			-2147483648 (-2^{31}) ... +2147483647 (2^{31} -1)
QB4 ... QB7	Double word	Set value			-2147483648 (-2^{31}) ... +2147483647 (2^{31} -1)
QB8	Word	Control word	QX8.0	Activate reset mode	
			QX8.1	Release comparison bit	
			QX8.2	Set SW gate	
			QX8.3	reserved	
			QX8.4	reserved	
			QX8.5	Load set value	loads set value into counter value
			QX8.6	Reset status bits	Reset of Bits 5.1 to 5.5 of the process data inputs (Comparison condition met, End value reached, Overflow performed, Underflow performed, Zero-crossing performed)
			QX8.7	reserved	
QB9			QX9.0	Deactivate reset mode	
			QX9.1	Disable comparison bit	
			QX9.2	Reset SW gate	
			QX9.3 - 9.7	reserved	

1) Internal process data mapping with data format “Standard”. Depending on the fieldbus specification and the data format of the communicating fieldbus components the bytes and/or words can be reversed during data transfer.

Process alarm data UR20-1CNT-500

Byte	Bit	Function
B0	X0.0 - 0.1	reserved
	X0.2	Overflow, underflow or end value reached
	X0.3	Comparison value reached
	X0.4 - 0.7	reserved
B1	X1.0	Status Input channel 0 A (track A)
	X1.1	Status Input channel 0 B (track B)
	X1.2	Status Input Reset
	X1.3 - 1.7	reserved
B2		16 Bit Time stamp 0 ... 65535µs, rotating
B3		

Setting up the counter

To start a counting process at least the signal mode needs to be parameterised and a rising flank at the bit QX8.2 (“Set SW gate”) of the control word is required.
You can define the counter functions by parameterising: the counting mode, a primary direction (counting up or down), and the counting behaviour. In addition you can parameterise options for setting a comparison bit (conditions, hysteresis) as well as producing a process alarm (see section „additional counter features").

Counting range, count limits

The maximum count limits are predetermined by the register size and cannot be changed.

Maximum counting range

Limit	Value
Lower count limit	-2 147 483 648 (-2^{31})
Upper count limit	+2 147 483 647 ($2^{31}-1$)

Counter functions

Counting mode

Depending on the application you can chose the counting mode:
- Endless counting, e.g. for detecting the position with a rotary encoder
- 1-time counting with or without primary direction, e.g. for counting products up to a maximum limit
- Periodic counting with or without primary direction, e.g. repeated identical pick-and-place operations

For both counting modes “1-time counting” and “periodic counting” you can parameterise the counting range with load value and end value.

Via bit QX8.5 of the control word you can load a set value into the counting value. You can define the set value in the module parameters.

Counting direction

No primary direction

The entire counting range is available when using a counting mode without primary direction.

Primary direction up

The counting range is limited at the top by a parameterised end value. Starting from 0, a set value or a parameterised load value, the counter counts until the end value -1 and is reset to the load value with the next encoder pulse.

Primary direction down

The counting range is limited at the bottom by a parameterised end value. Starting from 0, a set value or a parameterised load value, the counter counts until the end value +1 and is reset to the load value with the next encoder pulse.

Gate function: activate / deactivate counter

The counter is activated and deactivated using an internal gate. The internal gate is identical to the software gate (SW gate), it is activated using a 0-1 edge at the bit “Set SW gate” in the control word and deactivated with a 0-1 edge at the bit “Reset SW gate” in the control word (see table “Process data outputs”).

Counting bahaviour: interrupt / cancel counting

You can parameterise the counting behaviour after a new gate start: Using “Interrupt counting”, the counter continues from the last counting value. Using “Cancel counting”, counting starts again from the load value.

Endless counting

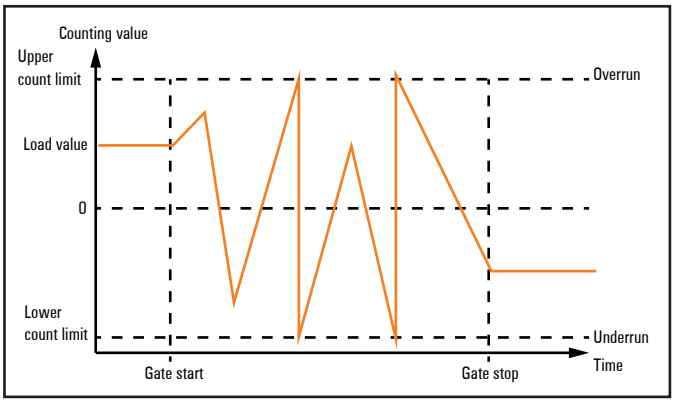

Continous counting

- Counting starts at the load value, the entire counting range is used.
- If the upper count limit is reached during up-counting, an additional counting pulse in the positive direction leads to a jump to the lower count limit. Counting continues from there.
- If the lower count limit is reached during down-counting, an additional counting pulse in the negative direction leads to a jump to the upper count limit. Counting continues from there.
- Upon exceeding the upper or lower counting limit, the status bit “Overflow performed” or “Underflow performed” is set and a process alarm is triggered if it is parameterised. The status bits remain set until they are reset with the bit “Reset status bits” in the control word.

1-time counting / no primary direction

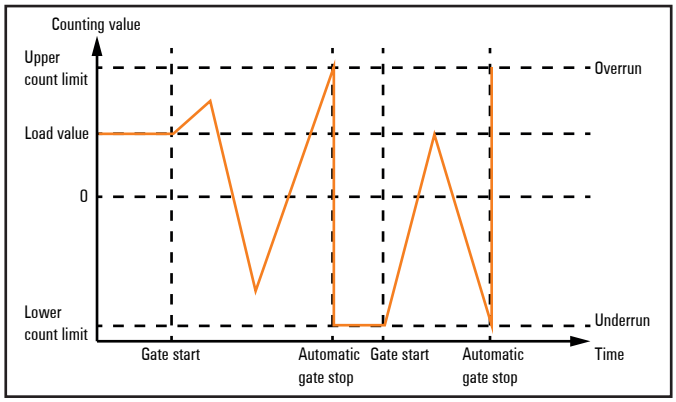

1-time counting, interrupted counting

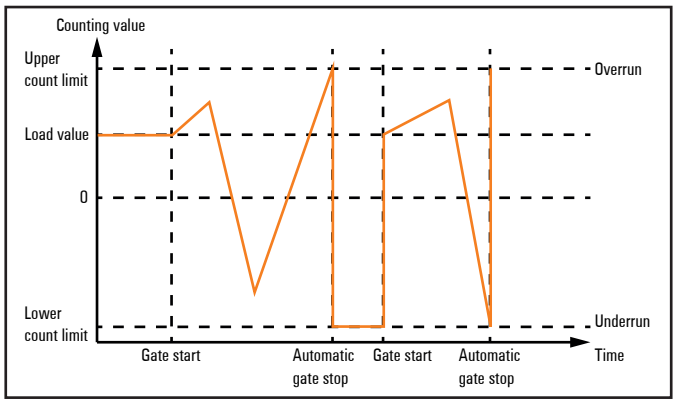

1-time counting, cancelled counting

- Counting (up and down) starts at the load value, the entire counting range is used.
- Upon exceeding the upper or lower count limit, the counter jumps to the other count limit respectively. The internal gate is automatically closed, the status bit “Overflow performed” or “Underflow performed” is set and a process alarm will be triggered if it is parameterised.
- To restart counting, the internal gate must be reopened. Depending on the parameters set, counting continues from the current counting value (“Interrupt counting”) or it starts again from the load value (“Cancel counting”).

1-time counting / primary direction up

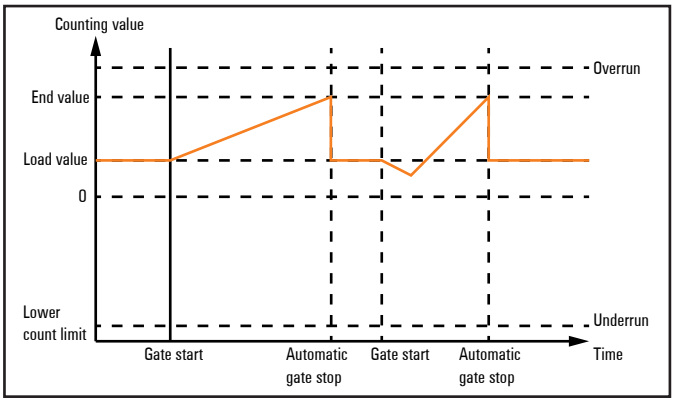

1-time counting, primary direction up

- Up-counting starts at the load value.
- If the parametrerised end value -1 is reached during counting in the positive direction, the counter jumps back to the load value at the next positive count pulse. The internal gate is automatically closed, the status bit "End value reached" is set, and a process alarm will be triggered if it is parameterised.
- To restart counting, the internal gate must be reopened. Counting starts again at the load value.
- Upon reaching the lower count limit the counter jumps to the upper count limit to continue counting from there. The status bit "Underflow performed" is set and a process alarm will be triggered if it is parameterised. All status bits remain set until they are reset with the bit "Reset status bits" in the control word.

Counting range

Limits	Valid range of values
End value	-2 147 483 647 ($-2^{31}+1$) to +2 147 483 647 ($2^{31}-1$)
Lower count limit	+2 147 483 648 (-2^{31})

1-time counting / primary direction down

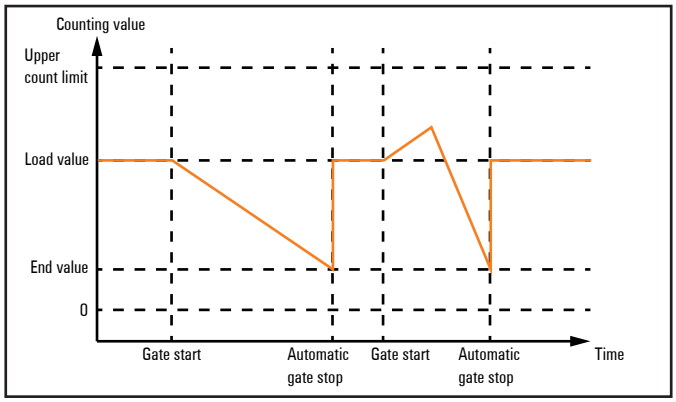

1-time counting, primary direction down.

- Down-counting starts at the load value.
- If the parameterised end value +1 is reached during counting in the negative direction, the counter jumps back to the load value at the next count pulse. The internal gate is automatically closed, the status bit "End value reached" is set and a process alarm will be triggered if it is parameterised.
- To restart counting, the internal gate must be reopened. Counting starts again at the load value.
- Upon reaching the upper count limit the counter jumps to the lower count limit to continue counting from there. The status bit "Overflow performed" is set and a process alarm will be triggered if it is parameterised. All status bits remain set until they are reset with the bit "Reset status bits" in the control word

Counting range

Limits	Valid range of values
End value	-2 147 483 648 (-2^{31}) to +2 147 483 647 ($2^{31}-2$)
Upper count limit	+2 147 483 647 ($2^{31}-1$)

Periodic counting / no primary direction

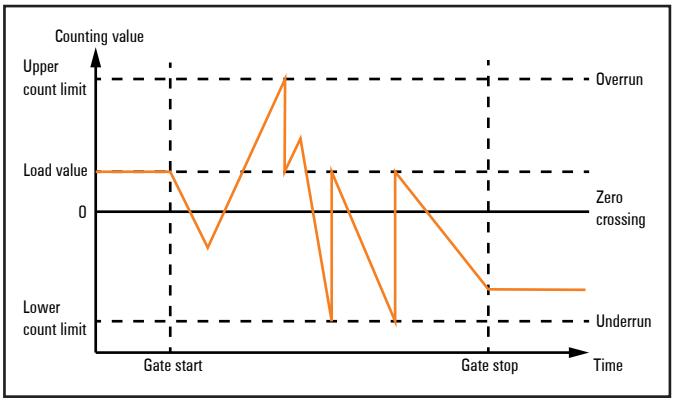

Periodic counting, no primary direction

- Counting (up or down) starts at the load value, the entire counting range is used.
- Upon reaching a count limit, the counter jumps back to the load value and starts counting again from there. The status bit "Overflow performed" or "Underflow performed" is set and a process alarm will be triggered if it is parameterised. All status bits remain set until they are reset with the bit "Reset status bits" in the control word.

Periodic counting / primary direction up

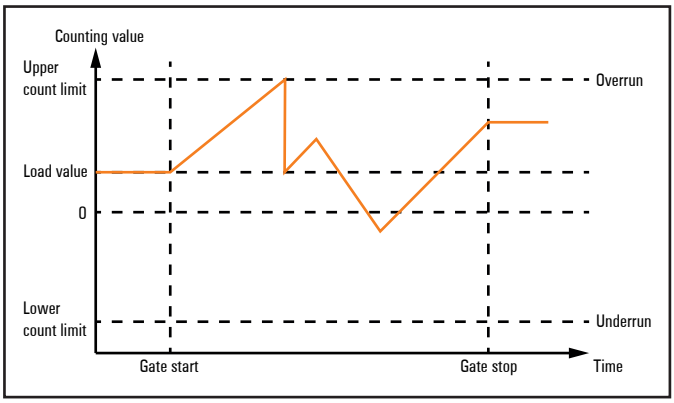

Periodic counting, primary direction up.

- Up-counting starts at the load value.
- If the parameterised end value -1 is reached during counting in the positive direction, the counter jumps back to the load value at the next positive count pulse and continues counting from there. The status bit "End value reached" is set and a process alarm will be triggered if it is parameterised.
- Upon reaching the lower count limit the counter jumps to the upper count limit to continue counting from there. The status bit "Underflow performed" is set and a process alarm will be triggered if it is parameterised. All status bits remain set until they are reset with the bit "Reset status bits" in the control word.

Counting range

Limits	Valid range of values
End value	-2 147 483 647 (-2^{31} +1) to +2 147 483 647 (2^{31}-1)
Lower count limit	+2 147 483 648 (-2^{31})

Periodic counting / primary direction down

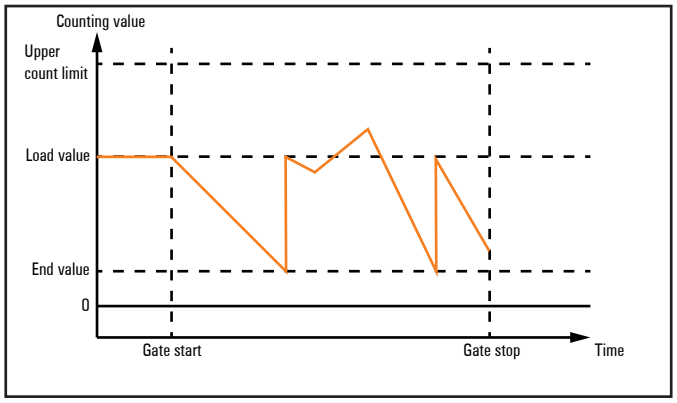

Periodic counting, primary direction down.

- Down-counting starts at the load value.
- If the parameterised end value +1 is reached during counting in the negative direction, the counter jumps back to the load value at the next count pulse and continues counting from there. The status bit "End value reached" is set and a process alarm will be triggered if it is parameterised.
- Upon reaching the upper count limit the counter jumps to the lower count limit to continue counting from there. The status bit "Overflow performed" is set and a process alarm will be triggered if it is parameterised. All status bits remain set until they are reset with the bit "Reset status bits" in the control word.

Counting range

Limits	Valid range of values
End value	-2 147 483 647 (-2^{31}) to +2 147 483 646 (2^{31}-2)
Upper count limit	+2 147 483 647 (2^{31}-1)

Additional counter features

You can define the additional features for the counter listed below by parametrising or via the process data outputs:

- Reset: resets the counting value to the load value during counting.
- Comparator: Upon meeting the comparison condition, the comparison bit is activated or a process alarm is triggered.
- Hysteresis: reduces frequent toggling of the comparison bit and/or excessive triggering of a process alarm, e.g. when the value of a sensor signal fluctuates around the comparison value.

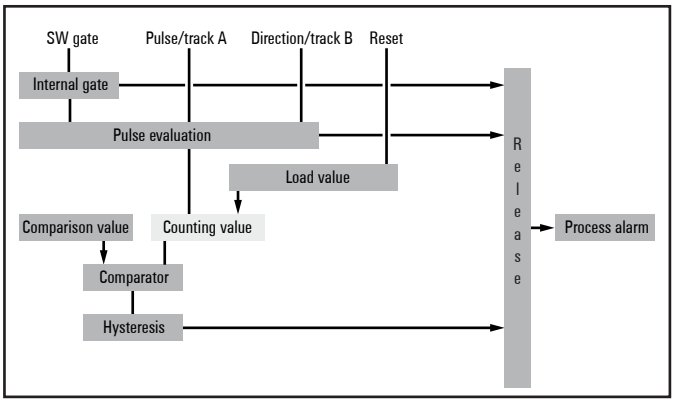

Additional counter functions.

Reset

The load value will be load into the counting value once there is a signal at the reset input. To use this feature you have to release the reset mode in the control word (bit QX8.0) in addition to the parameterisation.
The status bit IX4.3 indicates that there is a signal at the reset input. Once a reset is done, the status bit IX4.0 is set. This bit will be reset by deactivating the reset mode (control bit QX9.0).

Comparison function

Via the parameter „Comparison function“ you can deactivate the comparison function or define a comparison condition:

- Counter value higher or equal comparison value
- Counter value lower or equal comparison value
- Counter value equal comparison value

To use the comparison function, you have to preset the comparison value in the first double word of the process data outputs and to set the bit QX8.1 ("Comparison bit released") in the control word.

As soon as the counting value meets the corresponding comparison condition, the bits "Comparison bit active" and "Comparison condition met" are activated. The bit "Comparison bit active" remains set as long as the comparison condition is being met (respectively the parameterised hysteresis). The bit "Comparison condition met" remains active until it will be reset with the bit "Reset of the status bits" in the control word.

When using a counting mode with primary direction, the comparison bit will be set only upon reaching the comparison value from the primary direction.

Hysteresis

It is possible to reduce frequent triggering of a process alarm and toggling of the comparison bit (e.g. if the value of a sensor signal fluctuates around the comparison value), by setting the hysteresis. Thereby you define a range above and below a reference value (zero crossing, overflow/underflow and comparison value), within which the status bit will not be reset.
A limit value between 0 and 255 can be parameterised for the hysteresis. With hysteresis = 3 for example, all values differing less than 3 from the reference value are smoothed. Hysteresis is deactivated with the values 0 and 1.
The hysteresis is activated upon reaching the comparison condition. The comparison result remains unchanged during active hysterersis until the counting value reaches the predetermined hysteresis limit. After leaving the hysteresis range, hysteresis is reactivated only upon reaching the comparison condition again.
After changing the hysteresis value, an active hysteresis remains active. The new hysteresis value is actived during the next hysteresis event.
The behaviour of the status bit for hysteresis = 0 (hysteresis deactivated) and hysteresis = 3 is shown in the following diagrams (legends describe the behaviour for hysteresis = 3):

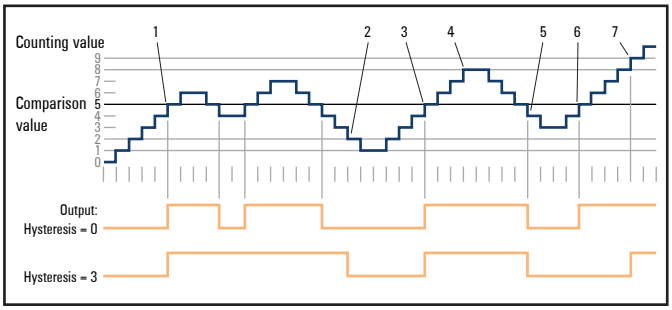

Operating principle of the hysteresis when counter value ≥ comparison value

1 Comparison condition met → status bit is set and hysteresis activated
2 Comparison condition not met, leaving the hysteresis range → status bit is reset
3 Comparison condition met → status bit is set and hysteresis activated
4 Leaving the hysteresis range, the status bit remains set because the comparison condition is still met
5 Comparison condition no longer met but hysteresis still active → status bit remains set
6 Comparison condition met, hysteresis still active → status bit remains set
7 Leaving the hysteresis range and comparison condition met → status bit remains set

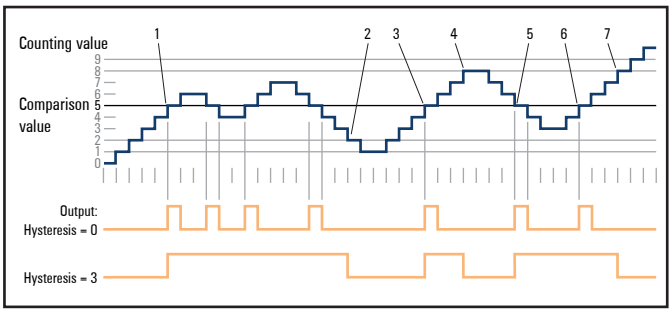

Operating principle of the hysteresis when counter value = comparison value

1 Comparison condition met → status bit is set and hysteresis activated
2 Comparison condition not met, leaving the hysteresis range → status bit is reset
3 Comparison condition met → status bit is set and hysteresis activated
4 Leaving the hysteresis range and comparison condition not met → status bit is reset
5 Comparison condition met → status bit is set and hysteresis activated
6 Comparison condition met and hysteresis active → status bit remains set
7 Leaving the hysteresis range and comparison condition no longer met → status bit is reset

6.78 Digital frequency counter module UR20-2FCNT-100

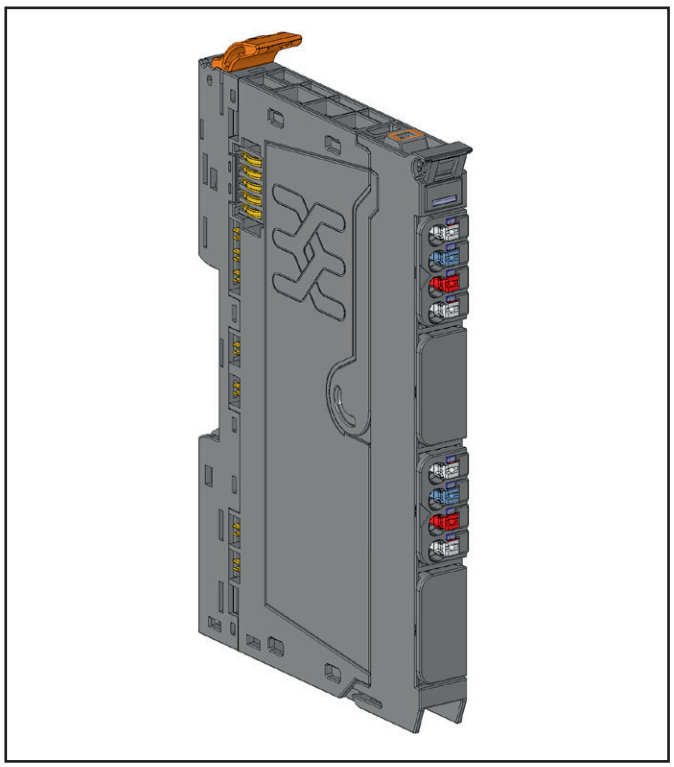

Digital frequency counter module UR20-2FCNT-100 (Item No. 1508080000)

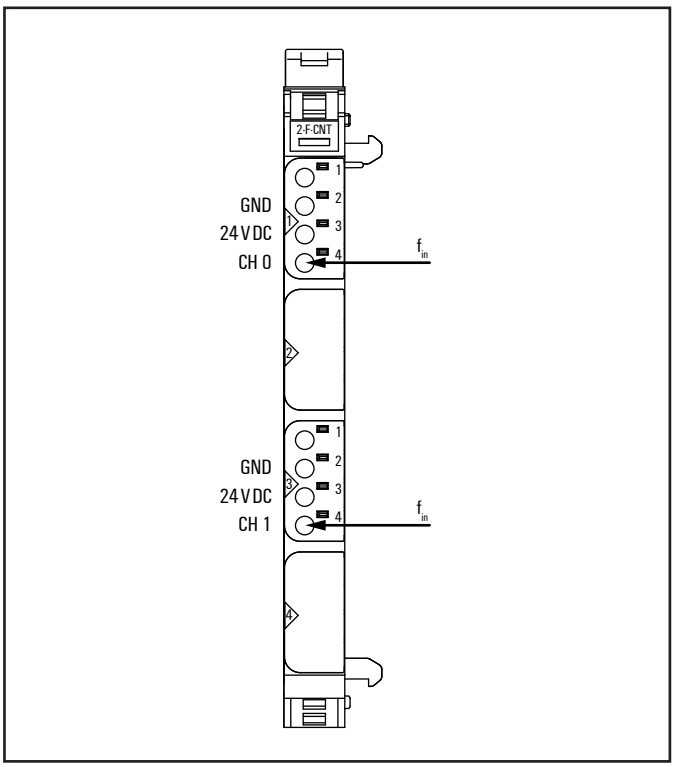

Connection diagram UR20-2FCNT-100

The digital frequency counter module UR20-2FCNT-100 can read square-wave signals from one or two external sensors with a maximum input frequency of 100 kHz. Frequencys to be counted are applied to channel CH0 and/or channel CH1.

The measurement will be started via control word 1 or 2 respectively in the process data. Measuring cycles can be defined in µs via an output double word. The longer the measuring cycle the more exactly the measurement.

A status LED is assigned to each channel. The module electronics supply the connected sensors with power from the input voltage path (U_{IN}).

- Two counter inputs 24 V DC
- Counting frequency 100 kHz max
- Digitally adjustable input filter to suppress interferences (17 filter frequencies gradually adjustable between 3 Hz and 187 kHz)

If the measuring cycle time will be zero (e.g. as an initial process value) the edge value will remain zero and the current period duration reaches its maximum. In this case please procede as follows:

► Stopp the measurement via the control word.
► Start the measurement again using a valid measuring cycle time value.

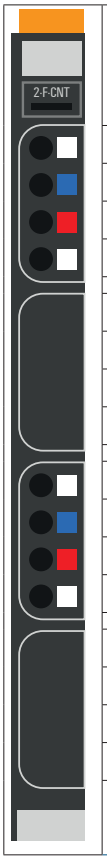

	Module status LED Green: Communication on system bus Red: Error
1.4	Yellow: CH0 active (1-level)
3.4	Yellow: CH1 active (1-level)

LED indicators UR20-2FCNT-100, troubleshooting see Chapter 12

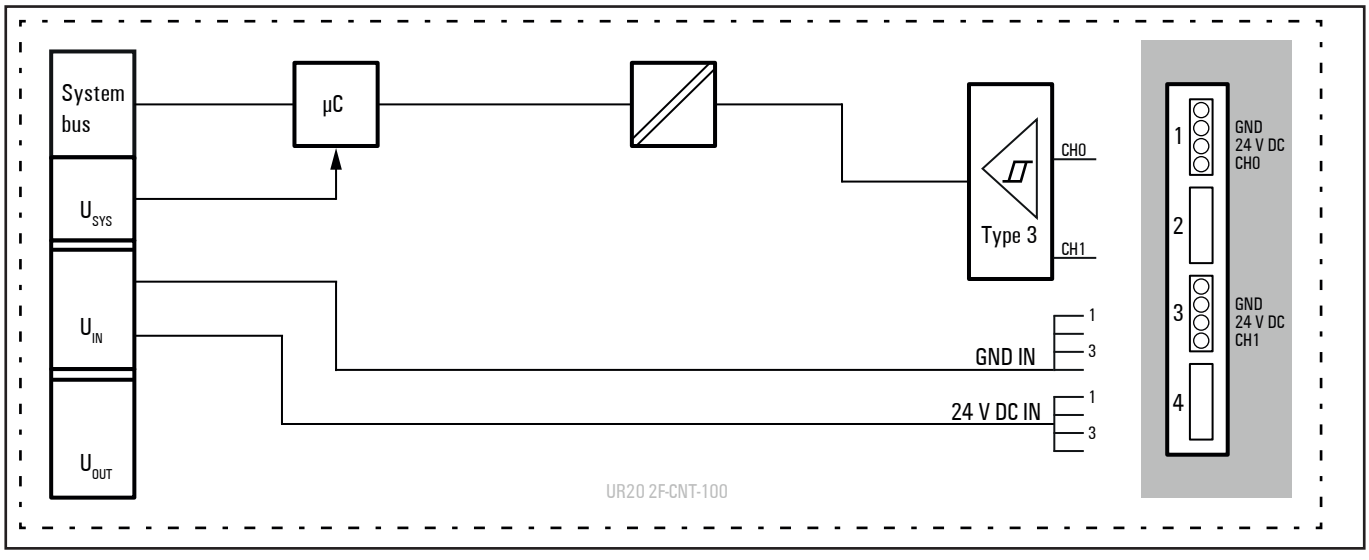

Block diagram UR20-2FCNT-100

Technical data UR20-2FCNT-100 (Item No. 1508080000)

System data	
Data	Process, parameter and diagnostic data depend on the coupler used, see coupler description.
Interface	u-remote system bus
System bus transfer rate	48 Mbps
Digital inputs	
Number of counter inputs	2
Input filter	adjustable between 3 Hz and 187 kHz (333 ms and 5 µs)
Low input voltage	< 5 V
High input voltage	> 11 V
Max. input current per channel	3.5 mA
Sensor supply	max. 2 A per plug
Sensor connection	2- and 3-wire
Reverse polarity protection	yes
Module diagnosis	yes
Individual channel diagnosis	no
Counter width	32 bits
Maximum input frequency	100 kHz
Mode of operation	Pulse (rising edges)
Supply	
Supply voltage	24 V DC +20 %/-15 %
Current consumption from system current path I_{SYS}	8 mA
Current consumption from input current path I_{IN}	35 mA + sensor supply current
General data	
Weight (operational status)	82 g
For additional general data, see Section 3.4	

Overview of the editable parameter UR20-2FCNT-100

Channel	Description	Options[1)]	Default
0 ... 1	Input filter	5 µs [187 kHz] (0) / 11 µs [94 kHz] (1) / 21 µs [47 kHz] (2) / 43 µs [23 kHz] (3) / 83 µs [12 kHz] (4) / 167 µs [6 kHz] (5) / 333 µs [3 kHz] (6) / 667 µs [1,5 kHz] (7) / 1 ms [732 Hz] (8) / 3 ms [366 Hz] (9) / 5 ms [183 Hz] (10) / 11 ms [92 Hz] (11) / 22 ms [46 Hz] (12) / 43 ms [23 Hz] (13) / 91 ms [11 Hz] (14) / 167 ms [6 Hz] (15) / 333 ms [3 Hz] (16)	5 µs [187 kHz]

1) Values in brackets for Modbus-TCP (firmware version 02.00.00 and higher), CANopen, EtherCAT and EtherNet/IP via module parameter class

Input filter UR20-2FCNT-100

Limiting frequency	Filter time, real value	Filter time
187 kHz	5,35 µs	5 µs
94 kHz	10,64 µs	11 µs
47 kHz	21,28 µs	21 µs
23 kHz	43,47 µs	43 µs
12 kHz	83,33 µs	83 µs
6 kHz	166,67 µs	167 µs
3 kHz	333,33 µs	333 µs
1,5 kHz	666,67 µs	667 µs
732 Hz	1,36 ms	1 ms
366 Hz	2,73 ms	3 ms
183 Hz	5,46 ms	5 ms
92 Hz	10,87 ms	11 ms
46 Hz	21,74 ms	22 ms
23 Hz	43,47 ms	43 ms
11 Hz	90,90 ms	91 ms
6 Hz	166,67 ms	167 ms
3 Hz	333,33 ms	333 ms

Diagnostic data UR20-2FCNT-100

Name	Bytes	Bit	Description	Default
Error indicator	0	0	Module error	
		1	Internal error	
		2	External error	
		3	Channel error	0
		4	Error	
		5	Reserved	0
		6	Reserved	0
		7	Parameter error	
Module type	1	0	Module Type	0x08
		1		
		2		
		3		
		4	Reserved	0
		5	Reserved	0
		6	Reserved	0
		7	Reserved	0
Error byte 2	2	2 ... 7	Reserved	0
Error byte 3	3	0 ... 2	Reserved	0
		3	Internal diagnostic FIFO full	0
		4 ... 7	Reserved	0
Channel type	4	0 ... 6	Channel type	0x76
		7	Reserved	0
Diagnostic bits per channel	5		Number of diagnostic bit per channel	0
Number of channels	6		Number of similar channels per module	2
Channel error	7 ... 10	0 ... 31	Reserved	0
Channel 0 error to Channel 31 error	11 ... 42	0 ... 7	Reserved	0
Time stamp	43-46		time stamp [µs] (32bit)	

Process data[1] inputs UR20-2FCNT-100

Byte	Format	Name	Bit	Function, when active	Remark
IB0 ... IB3	Double Word	Channel 0: Current measured period			Channel 0: Currently measured value of period duration multiplied by 125 ns results in the current period duration in µs
IB4 ... IB7	Double Word	Channel 0: Rising edges in current period			Channel 0: Number of rising edges within the current measurement cycle
IB8 ... IB11	Double Word	Channel 1: Current measured period			Channel 1: Currently measured value of period duration multiplied by 125 ns results in the current period duration in µs
IB12 ... IB15	Double Word	Channel 1: Rising edges in current period			Channel 1: Number of rising edges within the current measurement cycle
IB16	Word	Channel 0: Status	IX16.0 ... 16.7	reserved	
IB17			IX17.0	Measurement active	
			IX17.1 ... 17.7	reserved	
IB18	Word	Channel 1: Status	IX18.0 ... 18.7	reserved	
IB19			IX19.0	Measurement active	
			IX19.1 ... 19.7	reserved	

1) Internal process data mapping with data format “Standard”. Depending on the fieldbus specification and the data format of the communicating fieldbus components the bytes and/or words can be reversed during data transfer.

Process data[1] outputs UR20-2FCNT-100

Byte	Format	Name	Bit	Function, when active	Remark
QB0 ... QB3	Double Word	Channel 0: Measurement cycle period			Channel 0: Preset value of the measurement cycle period (24 Bit)
QB4 ... QB7	Double Word	Channel 1: Measurement cycle period			Channel 1: Preset value of the measurement cycle period (24 Bit)
QB8	Word	Channel 0: Control word	QX8.0 - QX8.7	reserved	
QB9			QX9.0	Measurement start	
			QX9.1	Measurement stop	
			QX9.2 - 9.7	reserved	
QB10	Word	Channel 1: Control word	QX10.0 - QX10.7	reserved	
QB11			QX11.0	Measurement start	
			QX11.1	Measurement stop	
			QX11.2 - 11.7	reserved	

1) Internal process data mapping with data format “Standard”. Depending on the fieldbus specification and the data format of the communicating fieldbus components the bytes and/or words can be reversed during data transfer.

Function frequency counting

Defining the measurement cycle period

You can define the length of the measurement cycle period for each channel within the output process data. As the 24 bit value has a resolution of 1 µs, values from 1 µs to 16.777.215 µs can be defined. The measurement cycle period must be long enough to detect at least one rising edge.

Setting of input filter

In order to suppress any distrubances you can parameterise a digital input filter for each channel (filter frequencies and respective pulse widths see "Overview of editable parameter").

Start measurement

To start the cyclic measurement, you have to set the Bit "Measurement start" in the control word of each channel (QX9.0 and QX11.0 respectively).

Calcuation of results

The input process data **Rising edges** register the amount of rising edges for each channel within the referring measurement cycle period. Counting starts with the last rising edge of the previous measurement cycle and ends with the last but one edge of the current measurement cycle. The time between first and last counted edge is defined as measured period. This is a 27-bit value with a resolution of 125 ns and an precision of 1 µs (valid value range between 0x00000008 and 0x7FFFFFF8).

Due to its resolution the value has to be devided by 8 within the control programm in order to get the current period duration in microseconds. This value can be from 1 µs to 16.777.215 µs.

The frequency is being calculated programwise as follows:

$$\text{Frequency } F = \frac{\text{Rising edges in current period}}{\text{Current measured period}}$$

In case there is no rising edge registred within a measurement cycle the current period duration will be set to the maximum value of 16.777.215,875 µs.
If the current period duration as well as the rising edges are registred as zero, the current measured period was too short to register a rising edge.

Modifying the measurement cycle period

You can modify the measurement cycle period during a running measurement. In this case the new value is not valid until the following measurement cycle, during the current measurement cycle the old value will be kept.

Stop measurement

To stop the cyclic measurement, you have to set the Bit "Measurement stop" in the control word of each channel (QX9.1 and QX11.1 respectively). If the last measurement cycle has not been run through completely, the current measured period will be set to the maximum value of 0x7FFFFFFF, the rising edges will be set to zero.

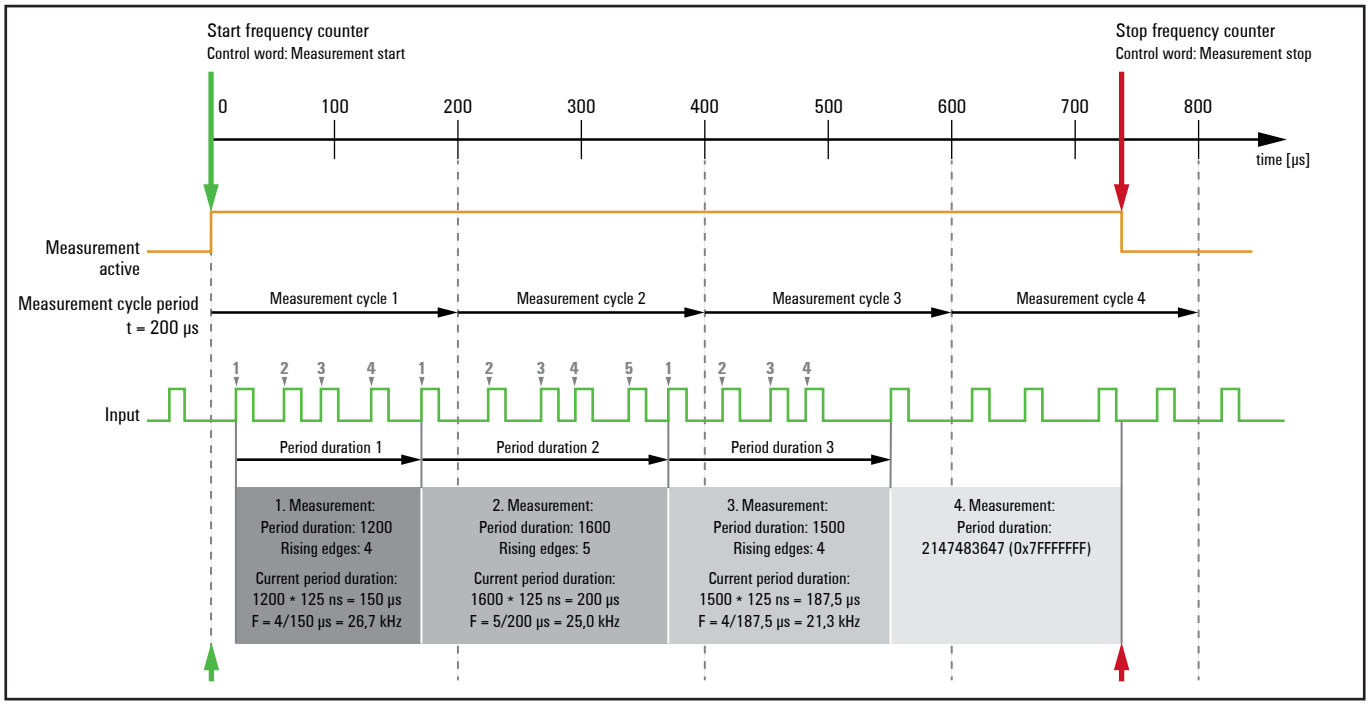

Functional principle frequency counting

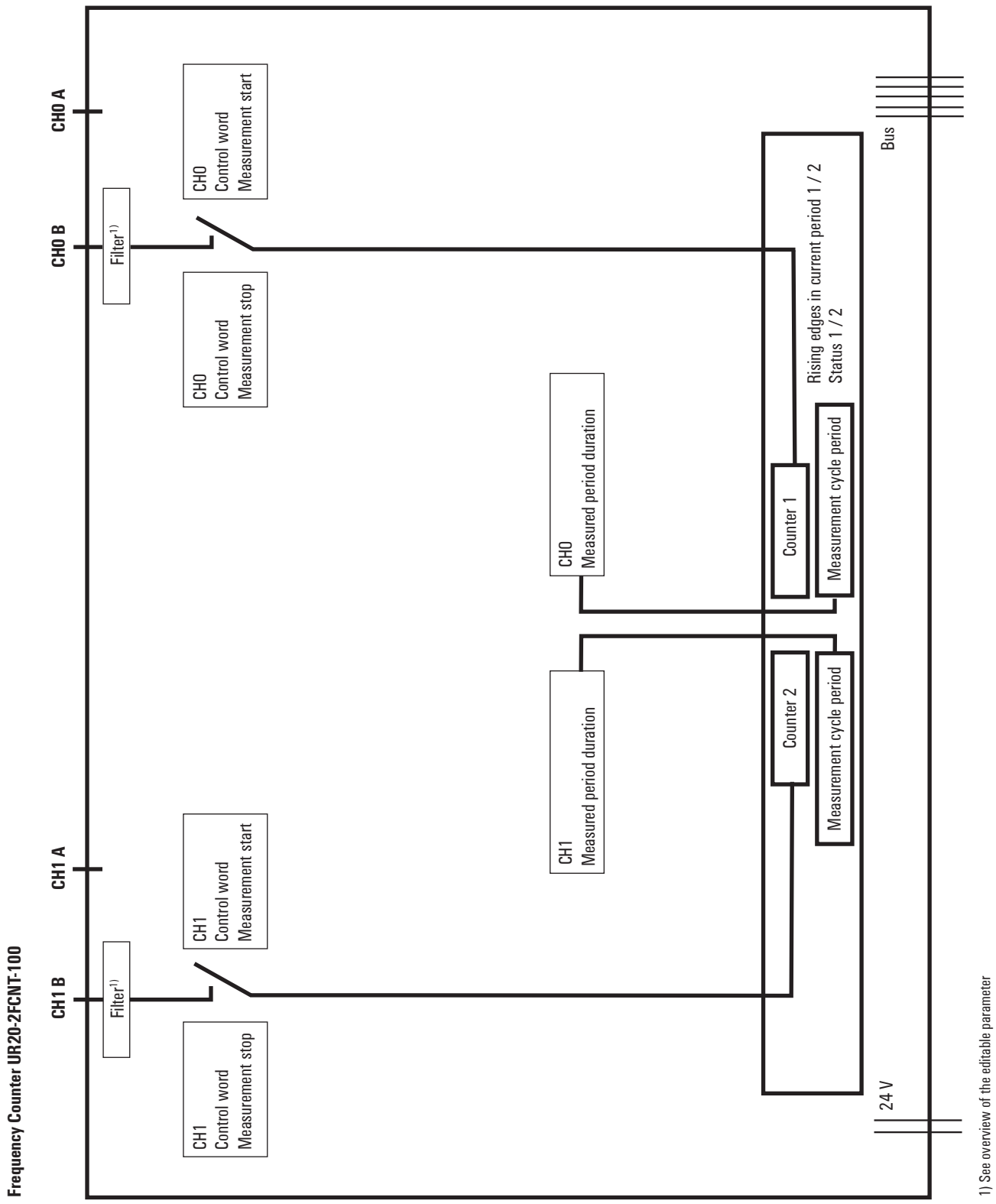
Frequency Counter UR20-2FCNT-100
CH0 A
CH0 B
CH1 A
CH1 B
Filter1)
Filter1)
CH0 Control word Measurement start
CH0 Control word Measurement stop
CH1 Control word Measurement start
CH1 Control word Measurement stop
CH0 Measured period duration
CH1 Measured period duration
Counter 1
Counter 2
Measurement cycle period
Measurement cycle period
Rising edges in current period 1 / 2
Status 1 / 2
Bus
24 V
1) See overview of the editable parameter

6.79 Digital interface module UR20-1SSI

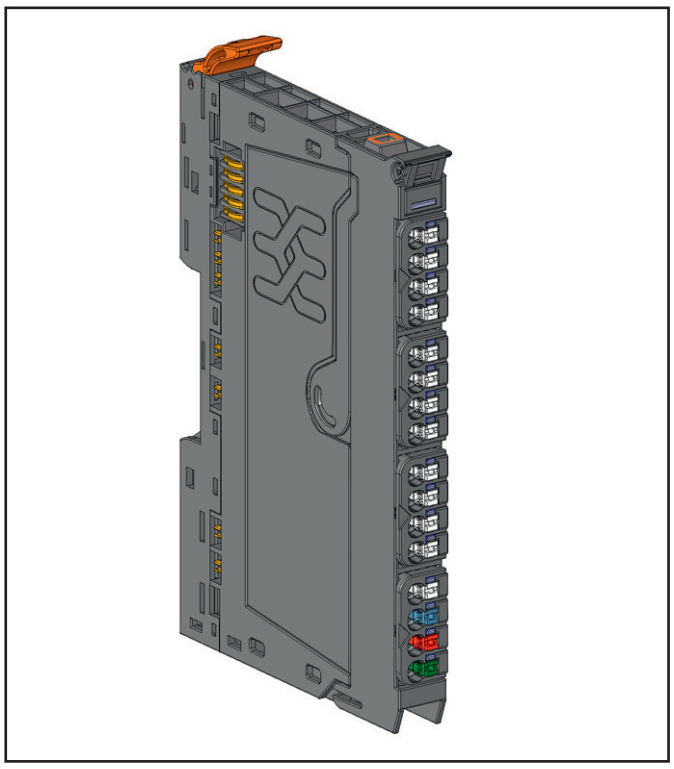

Digital Input module UR20-1SSI (Item No. 1508090000)

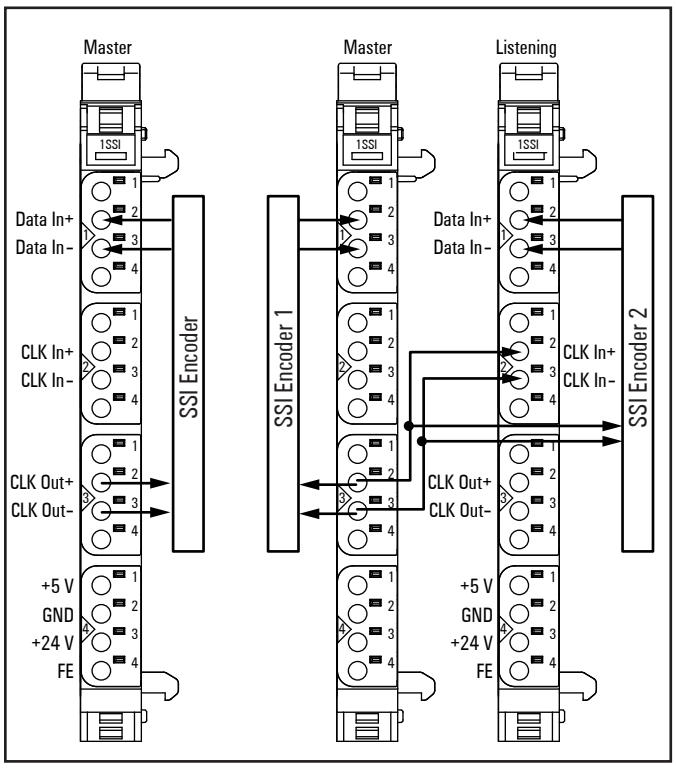

Connection diagram UR20-1SSI as a master or in mode „Listening“

The UR20-1SSI digital interface module can read differential signals (RS422) from a SSI encoder. It can be connected as a master directly to the encoder providing the clock. To synchronise two SSI encoders a second SSI module running in mode "Listening" can be placed between the encoder and a master module from wich it receives the clock.
The data transfer rate might be between 125 kHz and 2 MHz, the data format can be chosen between binary or Gray-Code.
Connected sensors can be delivered either with 5 V DC or 24 V DC. Both supply outputs are protected against overcurrent, they must not be used simultaneously.
The communication status is indicated by three LEDs. The module electronics supply the connected sensor with power from the input current path (I_{IN}).

The SSI encoder must be connected using a shielded wire (maximum length 320 m with 125 kHz)! The shielding has to be designed as described in the chapter „Earthing and shielding“

Please note for pins 1 to 3: The (+) signals are present on connectors 1 and 2 respectively, the (–) signals on connectors 3 and 4 respectively. Terminating resistors can be connected to the respective free connectors.

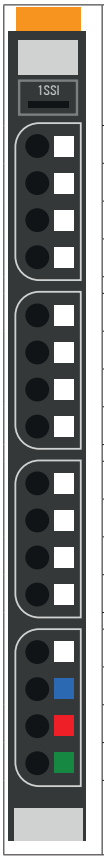

	Module status LED Green: Communication over system bus Red: Error
1.1	Yellow: Data In active
2.1	Yellow: Clock In active
3.1	Yellow: Clock Out active
4.1	Green: Sensor supply voltage +5 V DC
4.3	Green: Sensor supply voltage +24 V DC

LED indicators UR20-1SSI, troubleshooting see Chapter 12

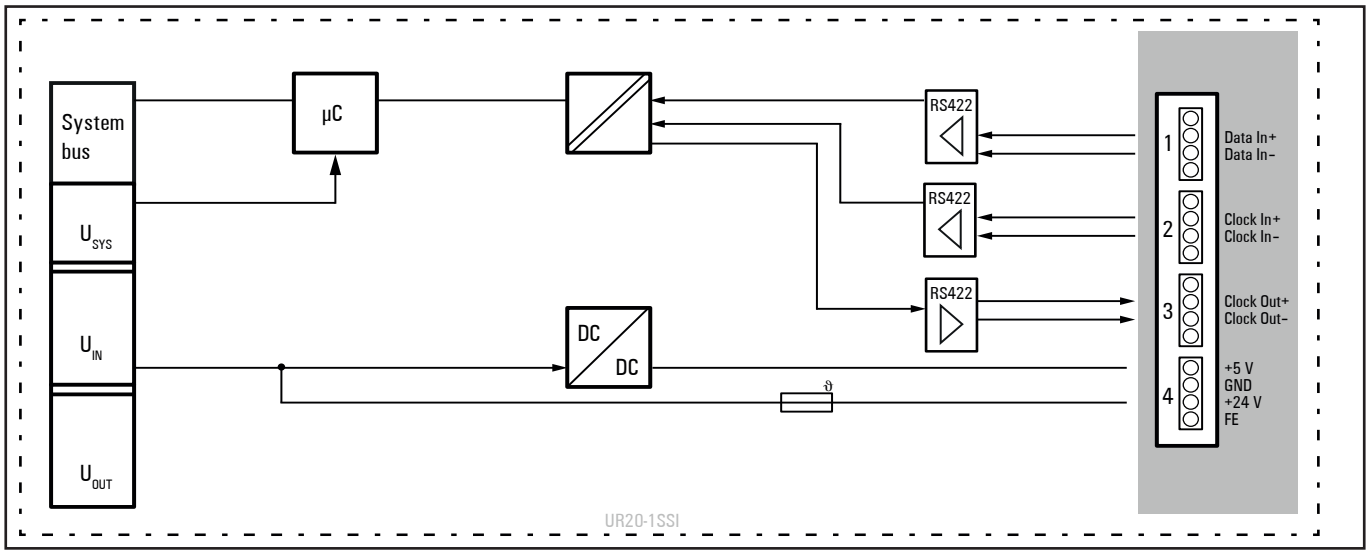

Block diagram UR20-1SSI

Technical data UR20-1SSI (Item No. 1508090000)

System data	
Data	Process, parameter and diagnostic data depend on the coupler used, see coupler description.
Interface	u-remote system bus
System bus transfer rate	48 Mbps
Number of channels	1
Type	SSI (Differential RS422)
SSI transfer rate	125 kHz ... 2 MHz
Delay time	1 µs ... 64 µs
Data width	8 ... 32 Bit
Data format	Binary / Gray-Code
SSI mode	Listening / Master
Sensor supply	500 mA (24 V DC) / 400 mA (5 V DC)
Reverse polarity protection	yes
Module diagnosis	yes
Individual channel diagnosis	no
Cable length	max. 320 m at 125 kHz; shielded
Supply	
Supply voltage	24 V DC +20 %/-15 %
Current consumption from system current path I_{SYS}	8 mA
Current consumption from input current path I_{IN}	25 mA + sensor supply
General data	
Weight (operational status)	87 g
For additional general data see Section 3.4	

Overview of the editable parameter UR20-1SSI

Channel	Description	Options[1)]	Default
0	Delay time[2), 3)]	1 µs (0) / 2 µs (1) / 4 µs (2) / 8 µs (3) / 16 µs (4) / 32 µs (5) / 48 µs (6) / 64 µs (7)	64 µs
0	SSI transfer rate[2), 3)]	2 MHz (0) / 1,5 MHz (1) /1 MHz (2) / 500 kHz (3) / 250 kHz (4) / 125 kHz (5)	125 kHz
0	Number of indicator bits	0 ... 15	0
0	Number of frame data bits	8 Bit (0) / 9 Bit (1) / 10 Bit (2) / ... / 31 Bit (23) / 32 Bit (24)	25 Bit
0	SSI mode	Listening (0) / Master (1)	Master
0	Bit order	LSB first (0) / MSB first (1)	MSB first
0	Data evaluation at edge	1 to 0 (0) / 0 to 1 (1)	1 to 0
0	Data format	Binary (0) / Gray-Code (1)	Gray-Code
0	SSI interface	disabled (0) / enabled (1)	disabled

1) Values in brackets for Modbus-TCP (firmware version 02.00.00 and higher), CANopen, EtherCAT and EtherNet/IP via module parameter class
2) These combinations **cannot** be used: 1 µs with 500 kHz, 1 µs or 2 µs with 250 kHz, 1 µs or 2 µs or 4 µs with 125 kHz.
3) When using the 1.5 MHz SSI transfer rate, the 1µs delay time effectively causes a delay of only 666 ns.

Diagnostic data UR20-1SSI

Name	Byte	Bit	Description	Default
Error indikator	0	0	Module error	
		1	Internal error	
		2	External error	
		3	Channel error	0
		4	Error	
		5	Reserved	0
		6	Reserved	0
		7	Parameter error	
Module type	1	0	Module Type 0x05	1
		1		0
		2		1
		3		0
		4	Reserved	0
		5	Reserved	0
		6	Reserved	0
		7	Reserved	0
Error byte 2	2	0 ... 7	Reserved	0
Error byte 3	3	0 ... 2	Reserved	0
		3	Internal diagnostic FIFO full	0
		4 ... 7	Reserved	0
Channel type	4	0	Channel type 0x79	1
		1		0
		2		0
		3		1
		4		1
		5		1
		6		1
		7		0
Diagnostic bits per channel	5		Number of diagnostic bit per channel	0
Number of channels	6		Number of similar channels per module	1
Channel error	7 ... 10	0 ... 31	Reserved	0
Channel 0 error ... Channel 31 error	11 ... 42	0 ... 7	Reserved	0
Time stamp	43-46		Time stamp [µs] (32bit)	

Process data[1] inputs UR20-1SSI

Byte	Format	Description
IB0	Double word	Encoder value
IB1		
IB2		
IB3		
IB4	Word	16 Bit time stamp
IB5		

1) Internal process data mapping with data format “Standard”. Depending on the fieldbus specification and the data format of the communicating fieldbus components the bytes and/or words can be reversed during data transfer.

6.80 Serial communication module UR20-1COM-232-485-422

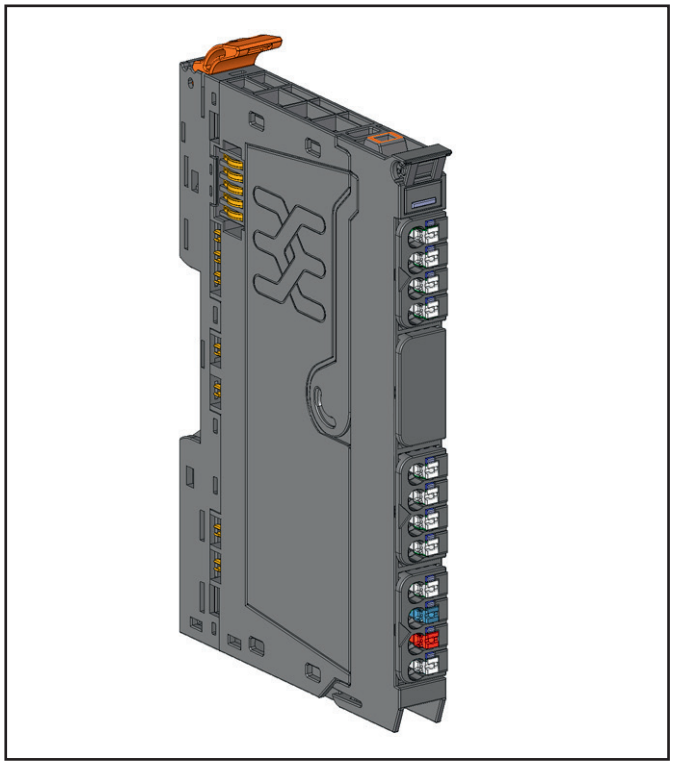

Serial communication module UR20-1COM-232-485-422 (Item No. 1315750000)

Serial data can be exchanged between the PLC and a data terminal device using the UR20-1COM-232-485-422 communication module. The device (e.g. barcode scanner, printer) can be connected via an interface type RS232, RS485 or RS422. The data transfer rate can be parameterised between 300 and 115200 bps. The process data length can be parameterised to be 8 byte or 16 byte. A terminating resistor can be parameterised for the RS485 and RS422 interface respectively. Depending on the application a proprietary protocol can be used since no preprocessing protocol is implemented.
The communication status is indicated by two LEDs on the respective plug.
The module electronics supply the connected data terminal device with power from the input current path (I_{IN}) either with 5 V DC or 24 V DC (parameterisable). Both supply voltage outputs are protected against overcurrent.

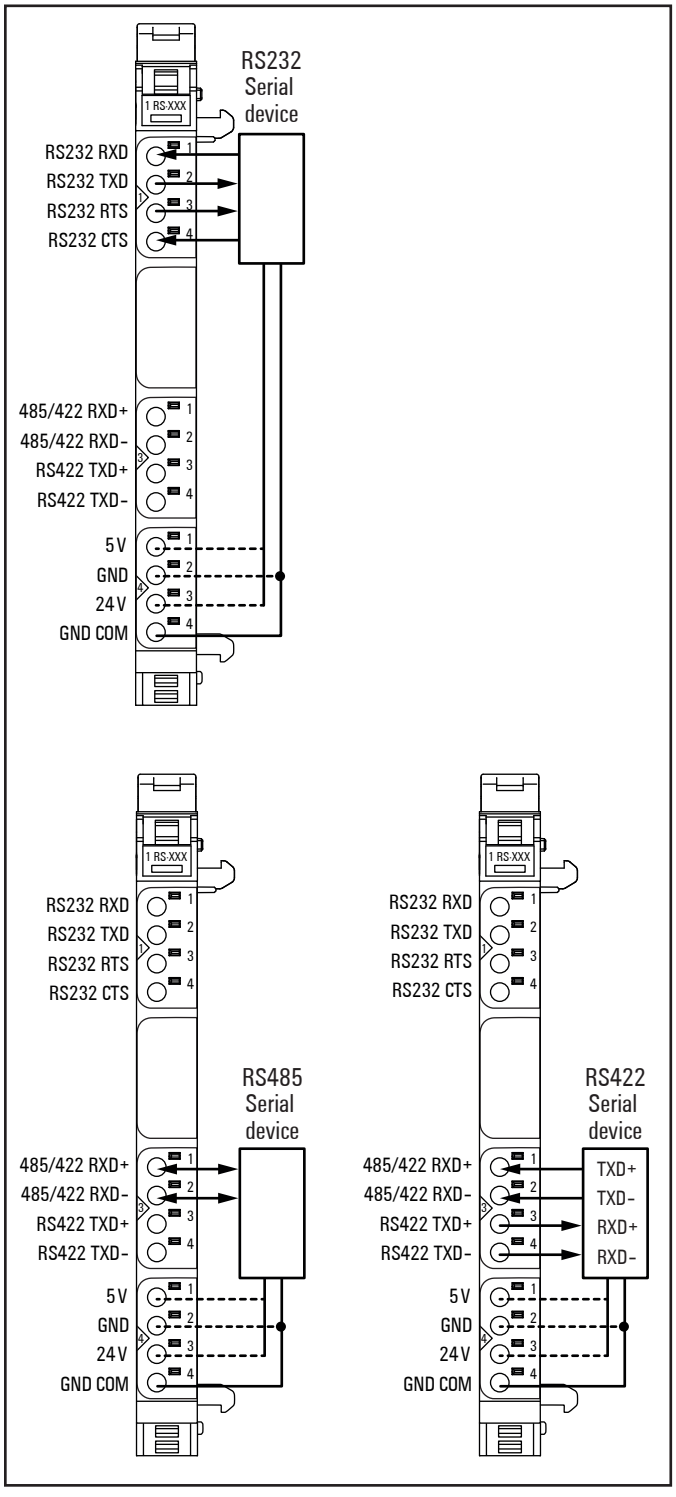

Connection diagram UR20-1COM-232-485-422

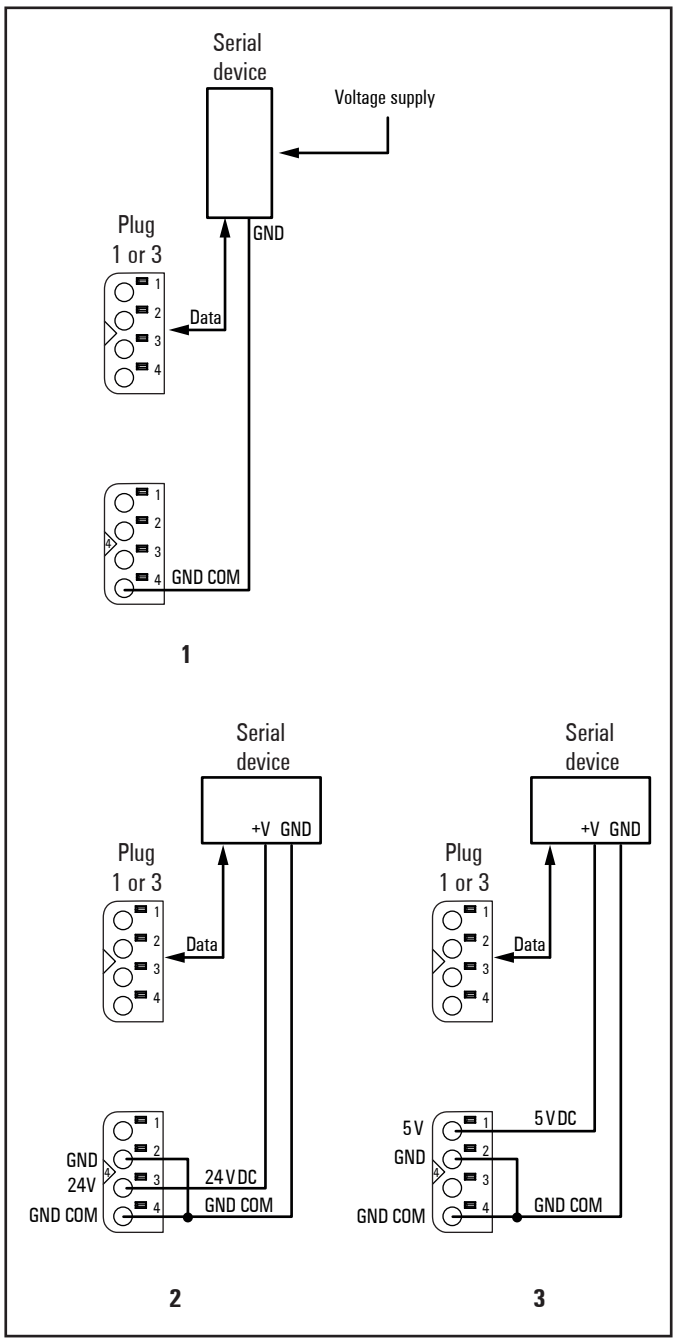

Connection variants for the voltage supply

1 Device with independent voltage supply
2 Supply with +24 V DC
3 Supply with +5 V DC

Pin assignment of the Sub-D plug (RS232 only)

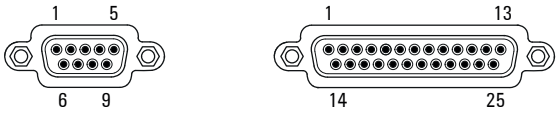

UR20	Name	Signal	UR20 direction	Cable colour[1)]	RS232 Pin
Assignment of the 9-pole plug (male)					
1.1	RXD	Receive data	in	green	3
1.2	TXD	Transmit data	out	brown	2
1.3	RTS	Request to send	out	blue	7
1.4	CTS	Clear to send	in	red	8
4.4	GND	Signal Ground		grey	5
Assignment of the 25-pole plug (male)					
1.1	RXD	Receive data	in	green	3
1.2	TXD	Transmit data	out	brown	2
1.3	RTS	Request to send	out	yellow	4
1.4	CTS	Clear to send	in	grey	5
4.4	GND	Signal Ground		blue	7

1) Colour coding for Weidmüller cables

Connection cables for the serial device

Please use shielded cables, because electromagnetic interferences from the surroundings have to be assumed. The maximum permissable cable length depends on the cable capacitance and the baud rate.

Connecting a RS232 device

Maximum cable length RS232

Cable capacitance	Max. cable length
≤ 2500 pF	15 m (49 ft), shielded
55 pF/m	45 m (147 ft)

Recommended cable type:
LIYCY 0.14 mm² or 0.34 mm² (e.g. Weidmüller PAC-UNIV-D9M-F-1M5, Item No. 1350400015)

Connecting a RS485 or RS 422 device

The serial device has to be connected using a twisted pair cable (U/UTP, Type Cat- 3 or J-2YY-2x2x0,6).

Maximum cable length RS422/485

Baud rate in kbps	Max. cable length
≤19200	1200 m (3937 ft), shielded
38400	500 m (1640 ft)
57600	250 m (820 ft)
115200	200 m (656 ft)

Recommended cable type for RS422/485:
LIYCY or LiYY, 0,25 mm². Both ends of the cable must be terminated.

- ► RS485: Please use one core pair for Data+/Data–. You can use any wire for the ground singal GND COM. The remaining free wires should be connected to ground.
- ► RS422: Please connect the wires for transmitting signals TXD+/TXD– and those for receiving signals RXD+/RXD– in pairs respectively. You can use any wire for the ground singal GND COM. The remaining free wires should be connected to ground.

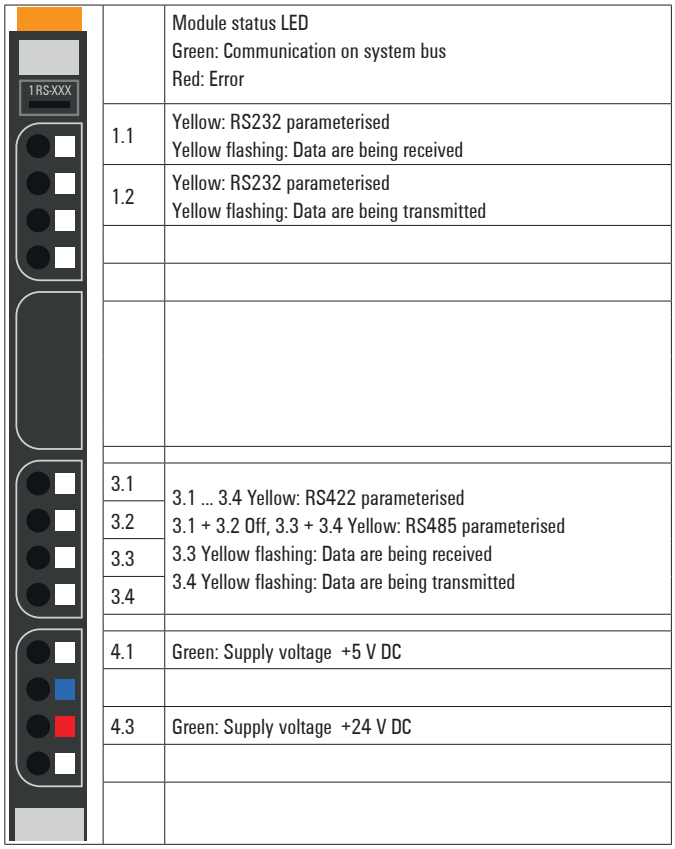

	Module status LED Green: Communication on system bus Red: Error
1.1	Yellow: RS232 parameterised Yellow flashing: Data are being received
1.2	Yellow: RS232 parameterised Yellow flashing: Data are being transmitted
3.1 3.2 3.3 3.4	3.1 ... 3.4 Yellow: RS422 parameterised 3.1 + 3.2 Off, 3.3 + 3.4 Yellow: RS485 parameterised 3.3 Yellow flashing: Data are being received 3.4 Yellow flashing: Data are being transmitted
4.1	Green: Supply voltage +5 V DC
4.3	Green: Supply voltage +24 V DC

LED indicators UR20-1COM-232-485-422, troubleshooting see Chapter 12

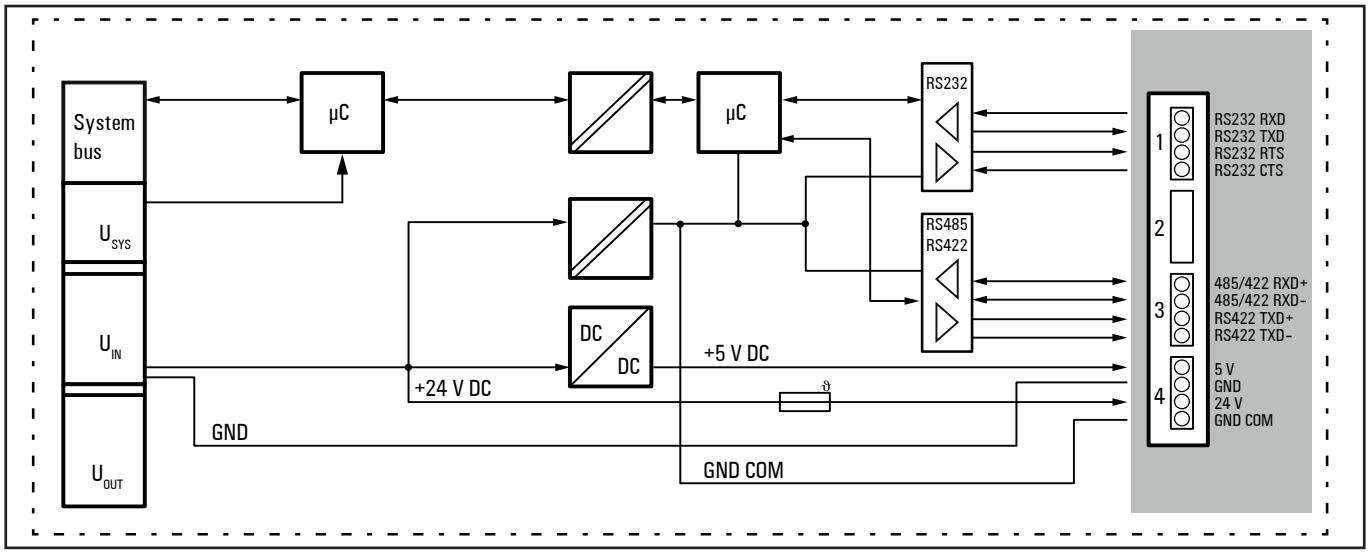

Block diagram UR20-1COM-232-485-422

Technical data UR20-1COM-232-485-422 (Item No. 1315750000)

System data	
Data	Process, parameter and diagnostic data depend on the coupler used, see coupler description.
Interface	u-remote system bus
System bus transfer rate	48 Mbps
Serial Interface	
Number	1
Type	RS232, RS485, RS422, parameterisable
Transfer rate	300 ... 115200 Bps, parameterisable
Supply voltage	5 V DC or 24 V DC
Current of power supply output	max. 400 mA
Standards RS232	DIN 66020, DIN 66259, EIA-RS232C, CCITT V.24/V.28
Standards RS485/RS422	DIN 66259 part 1 and 3, EIA-RS422/485, CCITT V.11
Terminating resistor RS485/RS422	120 Ω, parameterisable
Short-circuit-proof	yes
Module diagnosis	yes
Individual channel diagnosis	no
Supply	
Supply voltage	24 V DC +20 %/-15 %
Current consumption from system current path I_{SYS}	8 mA
Current consumption from input current path I_{IN}	16 mA + Load
General data	
Weight (operational status)	92 g
For additional general data see Section 3.4	

Overview of the editable parameter UR20-1COM-232-485-422

Description	Options[1)]	Default
Process data length	8 Byte[3)] (0) / 16 Byte (1)	16 Byte
Operating mode	disabled (0) / RS232 (1) / RS485 (2) / RS422 (3)	disabled
Baud rate	300 (0) / 600 (1) / 1200 (2) / 2400 (3) / 4800 (4) / 9600 (5) / 14400 (6) / 19200 (7) / 28800 (8) / 38400 (9) / 57600 (10) / 115200 (11)	9600
Stop bit	1 Bit (0) / 2 Bit (1)	1 Bit
Parity	None (0) / Even (1) / Odd (2)	None
Flow control	None (0) / CTS/RTS (1) / XON/XOFF (2)	None
Data bits[2)]	7 Bit (0) / 8 Bit (1)	8 Bit
Terminating resistor RS485/422	Off (0) / On (1)	Off
XON character	0 ... 255	17
XOFF character	0 ... 255	19

1) Values in brackets for Modbus-TCP (firmware version 02.00.00 and higher), CANopen, EtherCAT and EtherNet/IP via module parameter class
2) The option “7 Bit“ works only in combination with a parity ("even" or "odd")
3) CANopen and DeviceNet only

Diagnostic data UR20-1COM-232-485-422

Name	Byte	Bit	Description	Default
Error indicator	0	0	Module error	
		1	Internal error	
		2	External error	
		3	Channel error	0
		4	Error	
		5	Reserved	0
		6	Reserved	0
		7	Parameter error	
Module type	1	0	Module Type 0x15	1
		1		0
		2		1
		3		0
		4	Reserved	0
		5	Reserved	0
		6	Reserved	0
		7	Reserved	0
Error byte 2	2	0 ... 7	Reserved	0
Error byte 3	3	0 ... 2	Reserved	0
		3	Internal diagnostic FIFO full	0
		4 ... 7	Reserved	0
Channel type	4	0	Channel type 0x79	1
		1		0
		2		0
		3		1
		4		1
		5		1
		6		1
		7		0
Diagnostic bits per channel	5		Number of diagnostic bit per channel	8
Number of channels	6		Number of similar channels per module	1
Time stamp	43-46		Time stamp [µs] (32bit)	

Data transfer

The process data length can be parameterised to be 8 or 16 Bytes. Byte 0 is used for status and diagnosis, Byte 1 for the data segment length and the remaining 6 or 14 Bytes are user data.

Process data inputs: The data sent from the serial device are written into the receive buffer of the UR20 module. As soon as the SPS request results in that RX_CNT is not equal RX_CNT_ACK, the data will be sent in segments via the fieldbus coupler to the PLC. The successfully data transfer will be acknowledged to the module.
The receive buffer can safe a maximum of 255 Bytes. A software handshake (XON/XOFF) or a hardware handshake (RTS/CTS) can be parameterised using the flow control, so that an alarm will warn against a buffer overflow.
If the receive buffer runs out of free space, a receive buffer overflow occurs. In order to ensure sufficient free space in the receive buffer for the intended application, the communication speed, data size and communication cycle have to be adjusted to the connected device.
After the receive buffer overflow occurs, the receive buffer overflow state has to be resetted manually.

Process data outputs: The data sent from the PLC via the fieldbus coupler are written into the transmit buffer of the UR20 module. The module is continously checking whether data are ready to be sent or a data transfer to the device has been finished successfully. Not till then the next data will be transferred.

Process data inputs UR20-1COM-232-485-422

Byte	Name	Bit	Description	Remarks
IB0	Status and diagnosis	IX0.0	Data in the receive buffer	RX = 0: Receive buffer is empty RX = 1: A telegramm or telegramm segment in the receive buffer is ready for transmission.
		IX0.1	Receive buffer nearly full	Only 10 characters are left in the receive buffer. XOFF will be set if parametrerised.
		IX0.2	Not used	
		IX0.3	RX_CNT	The RX_CNT value is assigned to each data segment of the process input data while transmission. The sequence or the RX_CNT values is: Binary: 00, 01, 10, 11, 00, ... Decimal: 0, 1, 2, 3, 0, ... A faulty data seqence indicates missing data segments.
		IX0.4	RX_CNT	
		IX0.5	TX_CNT_ACK	The TX_CNT_ACK value is a copy of the TX_CNT value, which has been transferred together with the last data segment of the process output data. TX_CNT_ACK acknowledges that the data has been taken over successfully.
		IX0.6	TX_CNT_ACK	
		IX0.7	STAT	STAT = 1: Communication with the device is without fault. STAT = 0: The operating mode of the module is deactivated or the communication with the device is faulty.
IB1	Length of the data segment / of the subsequent diagnosis data		RX	Length of the data/diagnosis data in this frame
IB 2 ... IB 7 or IB 2 ... IB 15	Received data		User data of the transferred telegramm segment	

Process data outputs UR20-1COM-232-485-422

Byte	Name	Bit	Description	Remarks
QB0	Status and diagnosis	QX0.0	RXBUF FLUSH	Bit 0: RXBUF FLUSH The receive buffer can be cleared using this bit. STATRES = 1: A requirement with RXBUF FLUSH = 1 will be ignored. STATRES = 0: The receive buffer will be cleared with RXBUF FLUSH = 1.
		QX0.1	TXBUF FLUSH	Bit 1: TXBUF FLUSH The transmit buffer can be cleared using this bit. STATRES = 1: A requirement with TXBUF FLUSH = 1 will be ignored. STATRES = 0: The transmit buffer will be cleared with TXBUF FLUSH = 1.
		QX0.2	TX_HWBUFFER	Bit 2: DisableSend_TX_HWBUFFER This bit controls the hardware transmit buffer: DisableSend_TX_HWBUFFER = 0: The hardware transmit buffer is released. A character (Byte) will be sent as soon as it reaches the buffer. DisableSend_TX_HWBUFFER = 1: The hardware transmit buffer is locked. Characters (Bytes) will only be sent, when DisableSend_TX_HWBUFFER is set to 0 again.
		QX0.3	TX_CNT	The TX_CNT value is assigned to each data segment of the process output data. The sequence or the TX_CNT values is: Binary: 00->01->10->11->00... Decimal: 0->1->2->3->0... A faulty data sequence indicates missing data segments.
		QX0.4	TX_CNT	
		QX0.5	RX_CNT_ACK	RX_CNT_ACK must include a copy of the RX_CNT value. The RX_CNT value has been transferred together with the last data segment of the process input data. RX_CNT_ACK must be set in analogy with RX_CNT (in the status byte). It indicates that the data segment has been transferred successfully by using RX_CNT and enables to receive new data.
		QX0.6	RX_CNT_ACK	
		QX0.7	STATRES	The input data status bit STAT will be reset using this bit. When changing from 1 to 0 (falling edge) STAT will be reset from 0 to 1. STATRES = 0: All changes in the data fields TX_BYTE_CNT and TX_CNT will be ignored. The receive or transmit buffer can be cleared using RXBUF FLUSH or TXBUF FLUSH respectively. STATRES = 1 or changing from 0 to 1: The buffers cannot be cleared.
QB1	TX_Byte_CNT			
QB 2 ... QB 7 or QB 2 ... QB 15	Transmission data		User data of the transferred telegramm segment	

Enabling the data transfer

There are different ways to announce the communication module to the control. Using the test mode you only copy the input data into the output data of the module so that the received data will be sent again. Or you choose one of the function blocks provided by your engineering tool.
For your own programming please regard the following schemes showing the sequences for receiving and transmission.

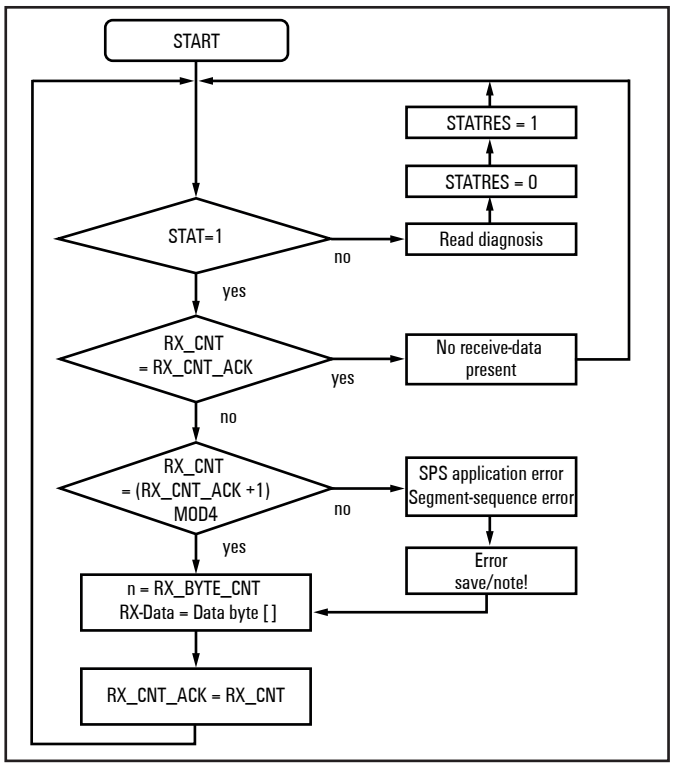

Scheme of the receiving sequence

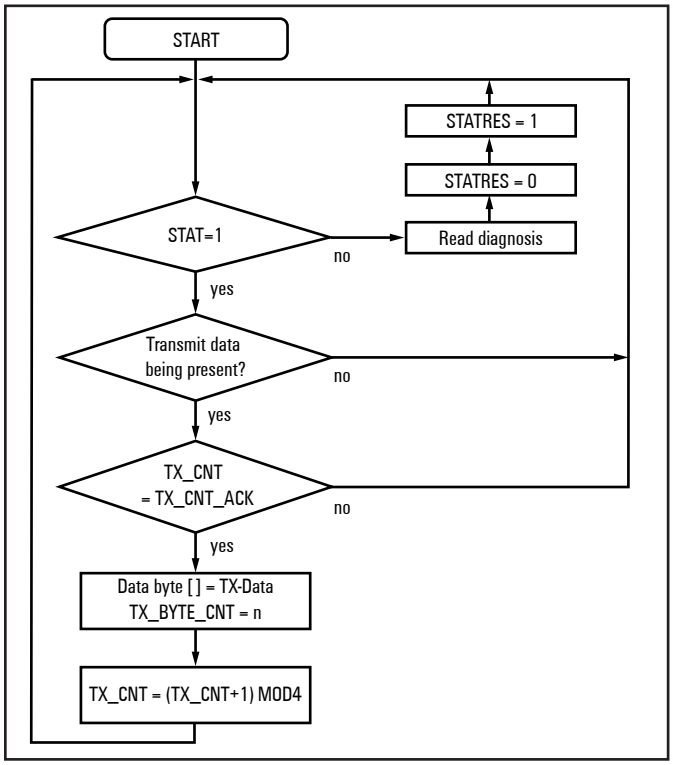

Scheme of the transmission sequence

6.81 Serial communication module UR20-1COM-232-485-422-V2

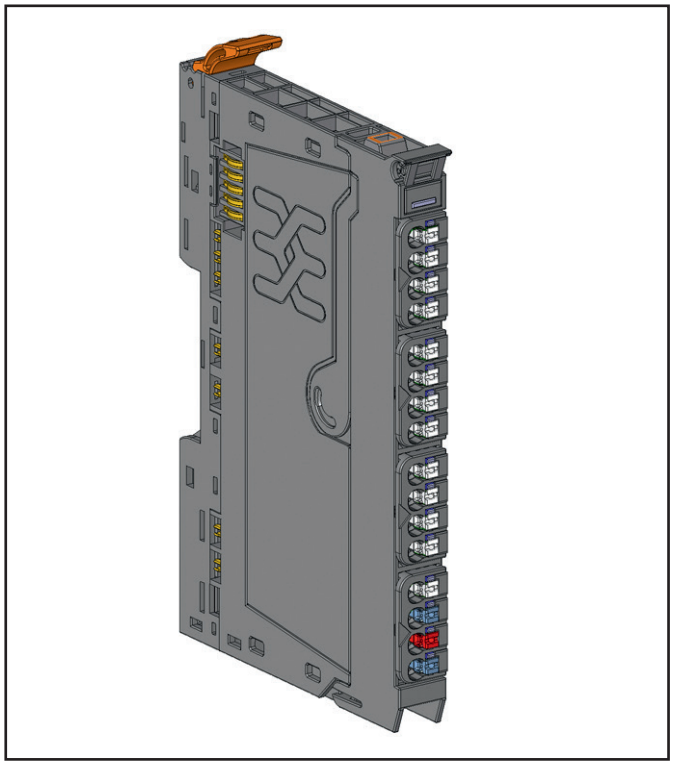

Serial communication module UR20-1COM-232-485-422-V2 (Item No. 2826800000)

Serial data can be exchanged between the PLC and a data terminal device using the UR20-1COM-232-485-422-V2 communication module. The device (e.g. barcode scanner, printer) can be connected via an interface type RS232 or RS485 or RS422. The data transfer rate can be parameterised between 300 and 230400 bps. The module supports the following protocols:

- Custom
- Modbus RTU Master
- Modbus ASCII Master
- Modbus RTU Slave
- Modbus ASCII Slave
- DMX Master
- DMX Slave

The communication status is indicated by LEDs 1.1 and 1.2. The module electronics supply the connected data terminal device with power from the input current path (I_{IN}) either with 5 V DC or 24 V DC. Both supply voltage outputs are protected against overcurrent.

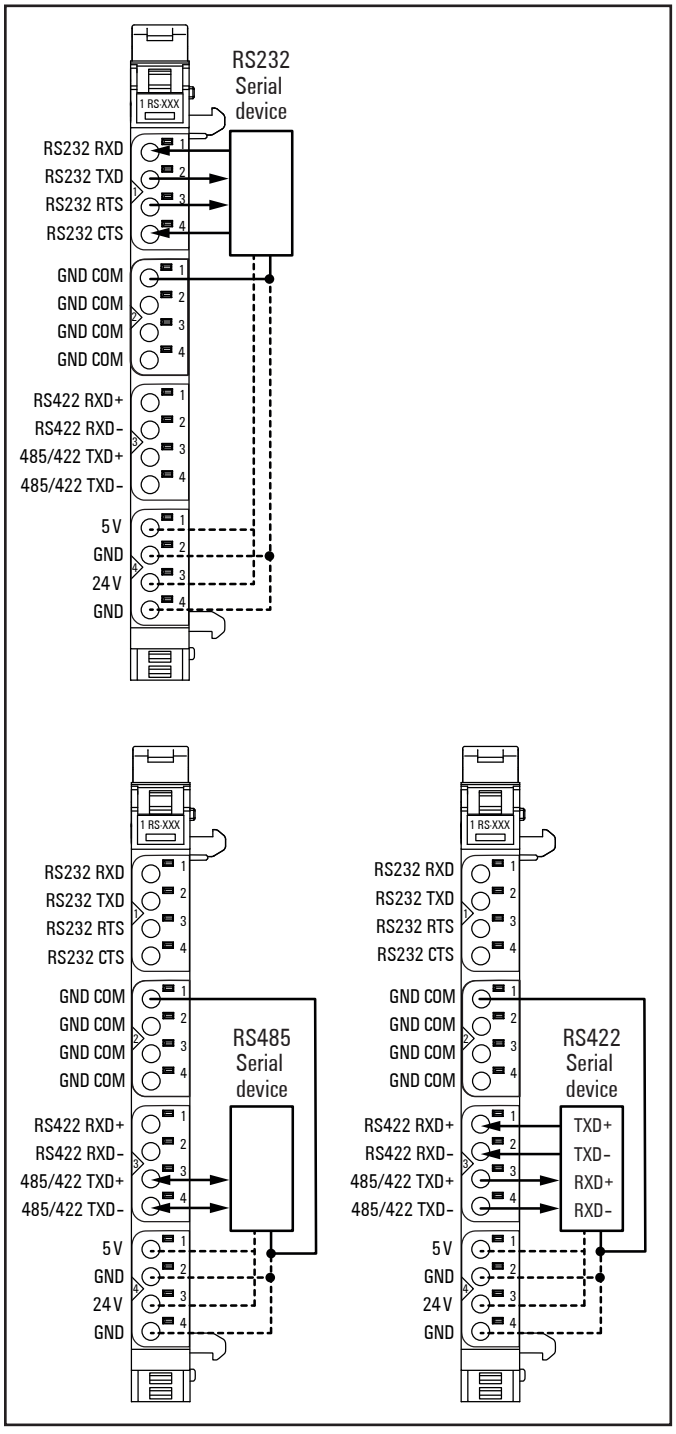

Connection diagram UR20-1COM-232-485-422-V2

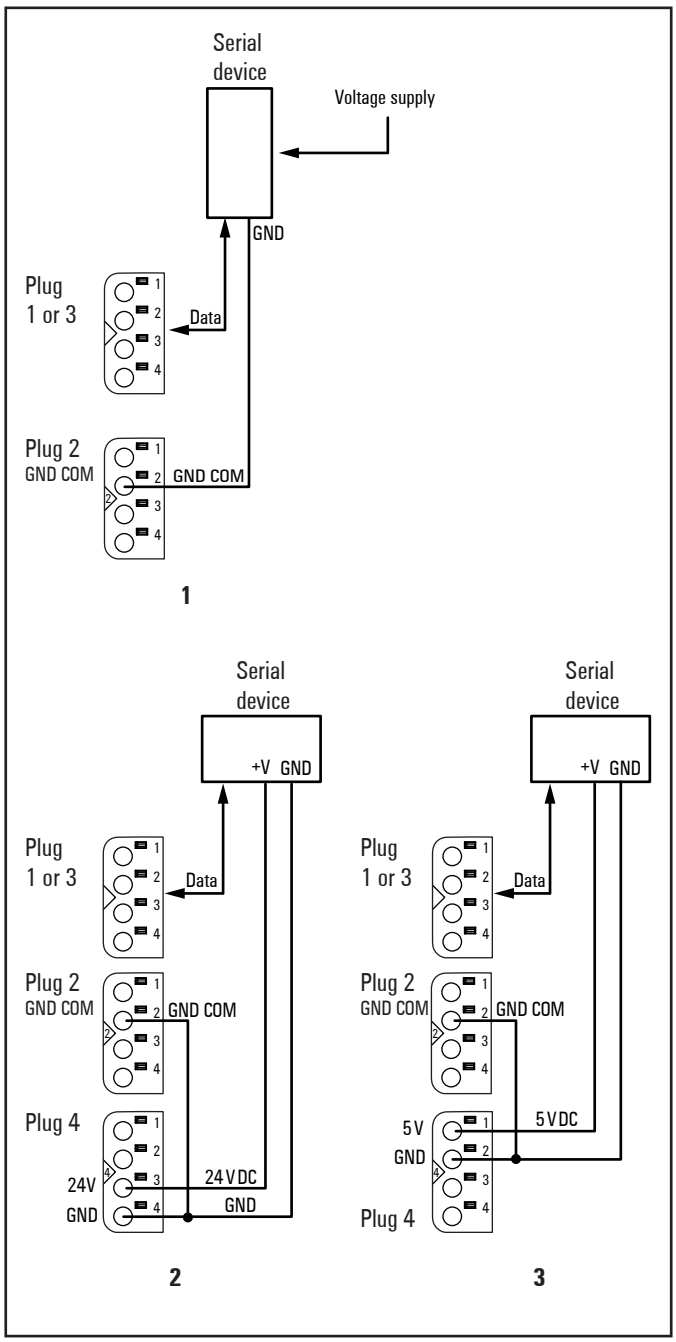

Connection variants for the voltage supply

1 Device with independent voltage supply
2 Supply with +24 V DC
3 Supply with +5 V DC

Pin assignment of the Sub-D plug (RS232 only)

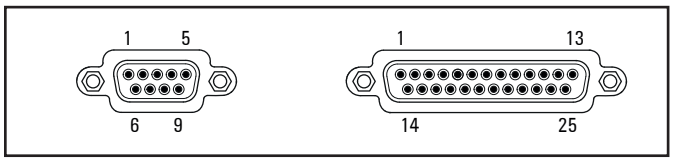

UR20	Name	Signal	UR20 direction	Cable colour[1)]	RS232 Pin
Assignment of the 9-pole plug (male)					
1.1	RXD	Receive data	in	green	3
1.2	TXD	Transmit data	out	brown	2
1.3	RTS	Request to send	out	blue	7
1.4	CTS	Clear to send	in	red	8
2.1 ... 2.4	GND COM	Signal Ground		grey	5
Assignment of the 25-pole plug (male)					
1.1	RXD	Receive data	in	green	3
1.2	TXD	Transmit data	out	brown	2
1.3	RTS	Request to send	out	yellow	4
1.4	CTS	Clear to send	in	grey	5
2.1 ... 2.4	GND COM	Signal Ground		blue	7
1) Colour coding for Weidmüller cables					

Connection cables for the serial device

Please use shielded cables, because electromagnetic interferences from the surroundings have to be assumed. The maximum permissable cable length depends on the cable capacitance and the baud rate.

Connecting a RS232 device

Maximum cable length RS232

Cable capacitance	Max. cable length
≤ 2500 pF	15 m (49 ft), shielded
55 pF/m	45 m (147 ft)

Recommended cable type:
LIYCY 0.14 mm² or 0.34 mm² (e.g. Weidmüller PAC-UNIV-D9M-F-1M5, Item No. 1350400015)

Connecting a RS485 or RS422 device

The serial device has to be connected using a twisted pair cable (U/UTP, Type Cat- 3 or J-2YY-2x2x0,6).
Recommended cable type for RS422/485:
LIYCY or LiYY, 0,25 mm². Both ends of the cable must be terminated.

- RS485: Please use one core pair for Data+/Data–. You can use any wire for the ground singal GND COM. The remaining free wires should be connected to ground.
- RS422: Please connect the wires for transmitting signals TXD+/TXD– and those for receiving signals RXD+/RXD– in pairs respectively. You can use any wire for the ground singal GND COM. The remaining free wires should be connected to ground.

Termination

A terminating resistor can be parameterised for the RS485 and RS422 interface respectively. The Pre-assignment of the receiving line is disabled by default and can be parametrised to “Idle termination” or “Line break termination”.

BUS END1			BUS END2				
Termination	Idle Term	Line Break Term	Termination	Idle Term	Line Break Term	BUS OK	BUS Line Break
0	0	0	0	0	0	0 V = High	0 V = High
1	0	0	1	0	0	0 V = High	0 V = High
0	1	0	0	0	1	650 mV = High	-2.17 V = Low
1	1	0	1	0	1	35 mV = High	-225 mV = Low
0	1	0	0	0	0	5 V = High	0 V = High
0	1	0	1	0	0	300 mV = High	0 V = High

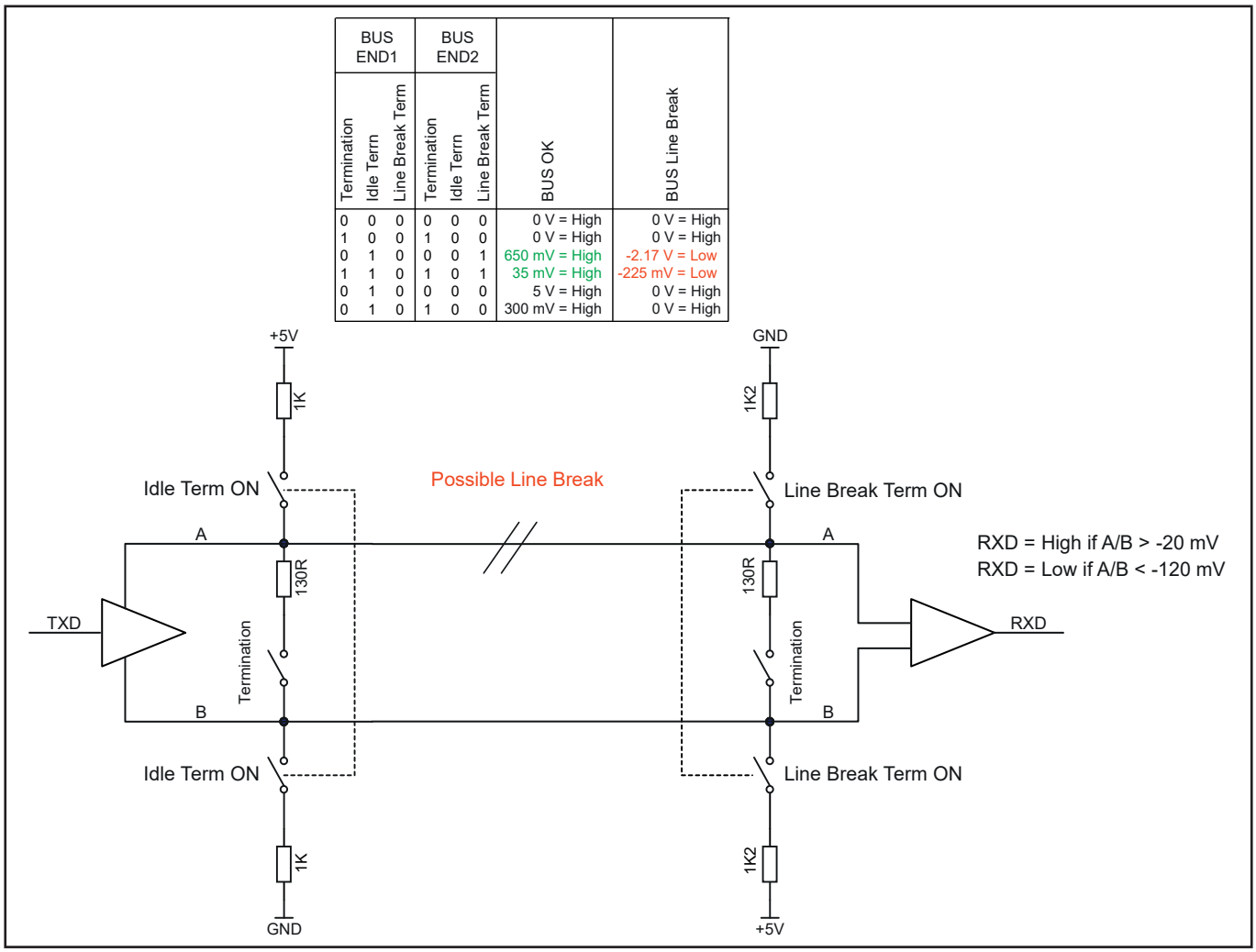

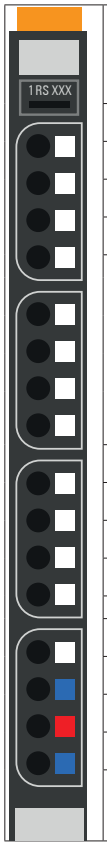

	Module status LED Green: Communication on system bus Red: Error
1.1	Yellow: Data at receiving buffer
1.2	Yellow: Data at sending buffer
1.3	Red: Communication error
1.4	Yellow: RS232 parameterised
3.1	Yellow: RS422 parameterised
3.3	Yellow: RS485 or RS422 parameterised
4.1	Green: Supply voltage +5 V DC
4.3	Green: Supply voltage +24 V DC

LED indicators UR20-1COM-232-485-422-V2, troubleshooting see Chapter 12

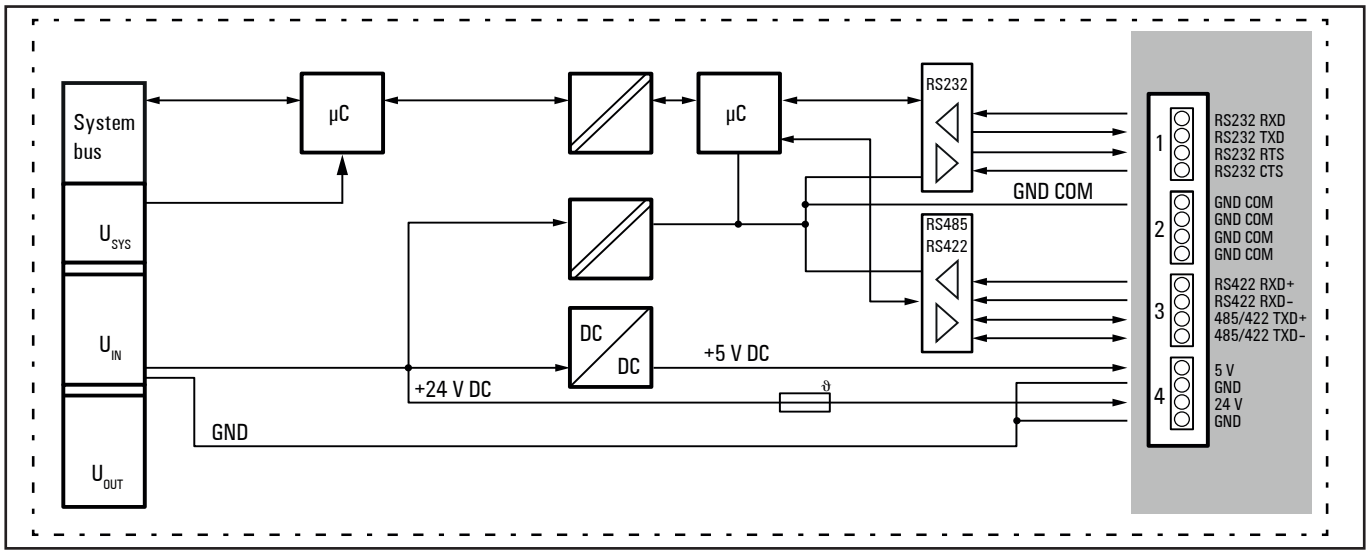

Block diagram UR20-1COM-232-485-422-V2

Technical data UR20-1COM-232-485-422-V2 (Item No. 2826800000)

System data		
Data	Process, parameter and diagnostic data depend on the coupler used, see coupler description.	
Interface	u-remote system bus	
System bus transfer rate	48 Mbps / 192 Mbps	
Serial Interface		
Number	1	
Type	RS232, RS485, RS422, parameterisable	
Transfer rate	300 ... 230400 Bps, parameterisable	
Supply voltage	5 V DC or 24 V DC	
Current of power supply output	max. 400 mA	
Standards RS232	DIN 66020, DIN 66259, EIA-RS232C, CCITT V.24/V.28	
Standards RS485/RS422	DIN 66259 part 1 and 3, EIA-RS422/485, CCITT V.11	
Terminating resistor RS485/RS422	120 Ω, parameterisable	
Short-circuit-proof	yes	
Module diagnosis	yes	
Individual channel diagnosis	yes	
Buffer size		
TX Buffer	1024 Byte	< 50 Byte free: Buffer overflow indicated > 60 Byte free: Buffer overflow not indicated
RX Buffer	4096 Byte	< 50 Byte free: Buffer overflow indicated > 60 Byte free: Buffer overflow not indicated
Modbus		
Number of channels	255	
Modbus function codes	01 (0x01) Read Coils 02 (0x02) Read Discrete Inputs 03 (0x03) Read Holding Registers 04 (0x04) Read Input Registers 05 (0x05) Write Single Coil 06 (0x06) Write Single Register 15 (0x0F) Write Multiple Coils 16 (0x10) Write Multiple registers 23 (0x17) Read/Write Multiple registers	
DMX		
Master cycle time	22.7 ms	
Supply		
Supply voltage	24 V DC +20 %/-15 %	
Current consumption from system current path I_{SYS}	8 mA	
Current consumption from input current path I_{IN}	16 mA + Load	
General data		
Weight (operational status)	87,5 g	
For additional general data see Section 3.4		

Overview of the editable parameter UR20-1COM-232-485-422-V2

Description	Options	Default
General settings		
Operating mode	disabled (0) / custom (1) / Modbus RTU Master (2) / Modbus ASCII Master (3) / Modbus RTU Slave (4) / Modbus ASCII Slave (5) / DMX Master (6) / DMX Slave (7)	disabled
Interface	RS232 (0) / RS485 (1) / RS422 (2)	RS232
Baud rate	300 (0) / 600 (1) / 1200 (2) / 1800 (3) / 2400 (4) / 4800 (5) / 9600 (6) / 14400 (7) / 19200 (8) / 28800 (9) / 38400 (10) / 57600 (11) / 115200 (12) / 230400 (13)	9600
Parity	None (0) / Odd (1) / Even (2) / Space (3) / Mark (4) / Any (5)	None
Data bits	8 Bits (0) / 7 Bits (1)	8 Bits
Stop bit	1 Bit (0) / 1.5 Bits (1) / 2 Bits (2)	1 Bit
Terminating resistor RS485/422	disabled (0) / enabled (1)	disabled
Receiving line preset	disabled (0) / Idle termination (1) / Line break termination (2)	disabled
Flow control		
Flow control	disabled (0) / CTS/RTS (1) / XON/XOFF (2)	disabled
XON	0 ... 255	17 (0x11)
XOFF	0 ... 255	19 (0x13)
Error handling		
Channel diagnosis	disabled (0) / enabled (1)	enabled
Error pattern	0 ... 255 [1]	255
TX settings		
Break time	0 ... 65535 Bits	12
Idle time	0 ... 65535 Bits	40
Send break before start telegram	Off (0) / On (1)	Off
Send idle before start telegram	Off (0) / On (1)	Off
Start telegram after break [2]	Off (0) / On (1)	Off
Start telegram after idle [2]	Off (0) / On (1)	Off
Number of leading chars	0 ... 2 Chars	0
Leading char 1	0 ... 255	0 (0x00)
Leading char 2	0 ... 255	0 (0x00)
Number of appended chars	0 ... 2 Chars	0
Append char 1	0 ... 255	19 (0x11)
Append char 2	0 ... 255	16 (0x10)
DMX: Number of channels	1 ... 513 Channels	513

1) 0 = Delete incorrect character, 255 = Retain incorrect character
2) RS485 operation only
3) 0 = Check for fixed length off

Overview of the editable parameter UR20-1COM-232-485-422-V2

Description	Options	Default
RX settings		
Break time	0 ... 65535 Bits	12
Idle time	0 ... 65535 Bits	40
Start telegram after break	Off (0) / On (1)	Off
Start telegram after idle	Off (0) / On (1)	On
Check first char	Off (0) / On (1)	Off
First char	0 ... 255	0x00
Check second char	Off (0) / On (1)	Off
Second char	0 ... 255	0x00
Fixed telegram length	0 ... 2047 Chars [3]	0
Check penultimate char	Off (0) / On (1)	Off
Penultimate character	0 ... 255	0x13
Check last char	Off (0) / On (1)	Off
Last character	0 ... 255	0x10
DMX: Start channel	0 ... 513 Channels	0
DMX: Length	1 ... 513 Channels	513

1) 0 = Delete incorrect character, 255 = Retain incorrect character
2) RS485 operation only
3) 0 = Check for fixed length off

Parameter preset depending on operating mode UR20-1COM-232-485-422-V2

Operating mode	Custom	Modbus RTU Master	Modbus ASCII Master	Modbus RTU Slave	Modbus ASCII Slave	DMX Master	DMX Slave
Parameter							
General settings							
Interface	User	User	User	User	User	Automatic	Automatic
Baud rate	User	User	User	User	User	Automatic	Automatic
Parity	User	NONE/ODD/EVEN	NONE/ODD/EVEN	NONE/ODD/EVEN	NONE/ODD/EVEN	Automatic	Automatic
Data bits	User	User	User	User	User	Automatic	Automatic
Stop bit	User	User	User	User	User	Automatic	Automatic
Terminating resistor RS485/422	Only 422/485	Only 422/485	Only 422/485	Only 422/485	Only 422/485	Only 422/485	Only 422/485
Receiving line preset	Only 422/485	Only 422/485	Only 422/485	Only 422/485	Only 422/485	Only 422/485	Only 422/485
Flow control							
Flow control	User	Automatic	Automatic	Automatic	Automatic	Automatic	Automatic
XON	User	Automatic	Automatic	Automatic	Automatic	Automatic	Automatic
XOFF	User	Automatic	Automatic	Automatic	Automatic	Automatic	Automatic
Error handling							
Channel diagnosis	User	User	User	User	User	User	User
Error pattern	User	Automatic	Automatic	Automatic	Automatic	Automatic	Automatic
TX settings							
Break time	User	Automatic	Automatic	Automatic	Automatic	Automatic	Automatic
Idle time	User	Automatic	Automatic	Automatic	Automatic	Automatic	Automatic
Send break before start telegram	User	Automatic	Automatic	Automatic	Automatic	Automatic	Automatic
Send idle before start telegram	User	Automatic	Automatic	Automatic	Automatic	Automatic	Automatic
Start telegram after break	User	Automatic	Automatic	Automatic	Automatic	Automatic	Automatic
Start telegram after idle	User	Automatic	Automatic	Automatic	Automatic	Automatic	Automatic
Number of leading chars	User	Automatic	Automatic	Automatic	Automatic	Automatic	Automatic
Leading char 1	User	Automatic	Automatic	Automatic	Automatic	Automatic	Automatic
Leading char 2	User	Automatic	Automatic	Automatic	Automatic	Automatic	Automatic
Number of appended chars	User	Automatic	Automatic	Automatic	Automatic	Automatic	Automatic
Append char 1	User	Automatic	Automatic	Automatic	Automatic	Automatic	Automatic
Append char 2	User	Automatic	Automatic	Automatic	Automatic	Automatic	Automatic
DMX: Number of channels	not used	not used	not used	not used	not used	User	User

Parameter preset depending on operating mode UR20-1COM-232-485-422-V2

Operating mode	Custom	Modbus RTU Master	Modbus ASCII Master	Modbus RTU Slave	Modbus ASCII Slave	DMX Master	DMX Slave
Parameter							
RX settings							
Break time	User	Automatic	Automatic	Automatic	Automatic	Automatic	Automatic
Idle time	User	Automatic	Automatic	Automatic	Automatic	Automatic	Automatic
Start telegram after break	User	Automatic	Automatic	Automatic	Automatic	Automatic	Automatic
Start telegram after idle	User	Automatic	Automatic	Automatic	Automatic	Automatic	Automatic
Check first char	User	Automatic	Automatic	Automatic	Automatic	Automatic	Automatic
First char	User	Automatic	Automatic	Automatic	Automatic	Automatic	Automatic
Check second char	User	Automatic	Automatic	Automatic	Automatic	Automatic	Automatic
Second char	User	Automatic	Automatic	Automatic	Automatic	Automatic	Automatic
Fixed telegram length	User	Automatic	Automatic	Automatic	Automatic	Automatic	Automatic
Check penultimate char	User	Automatic	Automatic	Automatic	Automatic	Automatic	Automatic
Penultimate character	User	Automatic	Automatic	Automatic	Automatic	Automatic	Automatic
Check last char	User	Automatic	Automatic	Automatic	Automatic	Automatic	Automatic
Last character	User	Automatic	Automatic	Automatic	Automatic	Automatic	Automatic
DMX: Start channel	not used	not used	not used	not used	not used	User	User
DMX: Length	not used	not used	not used	not used	not used	User	User

Diagnostic data UR20-1COM-232-485-422-V2

Name	Byte	Bit	Description	Default
Error indicator	0	0	Module error	
		1	Internal error	
		2	External error	
		3	Channel error	
		4	Error	
		5	Power supply fault	
		6	Reserved	0
		7	Parameter error	
Module type	1	0	Module Type 0x0F	1
		1		1
		2		1
		3		1
		4	Reserved	1
		5	Reserved	0
		6	Reserved	0
		7	Reserved	0
Error byte 2	2	0 ... 7	Reserved	0
Error byte 3	3	0 ... 2	Reserved	0
		3	Internal diagnostic FIFO full	
		4	Communication fault	
		5 ... 7	Reserved	0
Channel type	4	0	Channel type 0x62	0
		1		1
		2		0
		3		0
		4		0
		5		1
		6		1
		7		0
Diagnostic bits per channel	5		Number of diagnostic bits per channel	64
Number of channels	6		Number of similar channels per module	1
Channel error	7	0	Error at channel 0	
		1 ... 7	Reserved	0
Channel error	8		Reserved	0
Channel error	9		Reserved	0
Channel error	10		Reserved	0
Channel 0 TX error	11	0	TX Buffer overflow	
		1	Line break [1]	
		2 ... 7	Reserved	0
Channel 0 RX error	12	0	RX Buffer overflow	
		1	RX Parity error	
		2	RX Frame error	
		3	Line break [2]	
		4 ... 7	Reserved	0

1) RS422
2) RS485/RS422

Diagnostic data UR20-1COM-232-485-422-V2

Name	Byte	Bit	Description	Default
Channel 0 Modbus error	13	0	Response error code 01	
		1	Response error code 02	
		2	Response error code 03	
		3	Response error code 04	
		4 ... 6	Reserved	0
		7	No response	
	14	0	Message timeout	
		1	Invalid channel	
		2	Invalid Slave ID	
		3	Invalid F-Code	
		4	Invalid register	
		5	Invalid length	
		6	Invalid value	
		7	Invalid CRC	
Channel 0 DMX error	15	0	Message timeout	
		1 ... 7	Reserved	0
Time stamp	43-46		Time stamp [µs] (32bit)	

1) RS422
2) RS485/RS422

Data transfer

The UR20-1COM-232-485-422-V2 module provides 19 bytes input data and 19 bytes output data. Bytes 0 to 2 are used for exchanging control, status and data length information. The remaining 16 bytes are reserved for process data.

Process input data: Data sent from a serial device is written to the receive buffer (Rx Buffer) of the module. The module reports “Rx Buffer not empty” in Status 1 of the input data. As soon as the plc sends “Data read” in Control 0, data and data length information are read from Rx Buffer and written to the process inputs. In one reading cycle up to 16 bytes can be read. If the Rx Buffer is not empty after one reading cycle or telegram end information was not received, reading can be executed again by setting the “Process data toggle bit” in addition to “Data read”.
The Rx Buffer can store up to 4096 Byte. “RX Buffer full” is indicated if less than 50 bytes are available.
The “Module diagnosis” bit in Status 1 indicates that the module sent diagnosis information. This bit is cleared if the module error is gone and a new command was received in process inputs (process data toggle bit has changed).

Process output data: Data is transmitted to a serial device by copying the desired data to the process outputs and setting “Data send” in Control 0. Up to 16 bytes of data can be sent in one cyle. If more than 16 bytes need to be sent, the data needs to be stored in the Tx Buffer by copying desired data to the process outputs and setting “Data store”. The module responds “Tx Buffer not empty” in Status 1. Setting “Data send” transmits the Tx Buffer data and the process output data. If the data was send suceesfully, the module responds “Tx Buffer empty”. Up to 1024 Byte can be stored in the Tx Buffer. “Tx Buffer full” is indicated, if less than 50 bytes are available.

Process data inputs UR20-1COM-232-485-422-V2

Byte	Function	Name	Bit	Value	Description	Remarks
IB0	Status 0	Command TX response	IX0.0 ... IX0.2	0	Idle	-
				1	Data send	Sends the TX buffer content and the data from the current telegram
				2	Data store	Saves the current telegram data in the TX buffer
				3	Data clear	Deletes all data in the TX buffer
				4	-	-
				5	-	-
				6	Modbus configuration	Configuration of the Modbus registers for master or slave operation
				7	Clear module data	Deletes all data in the RX and TX buffers and restores all default values. Only the parameters are retained.
		Flow control	IX0.3	0	Free	Information of the remote station to the flow control
				1	Blocked	
		Command RX response	IX0.4 ... IX0.6	0	Idle	-
				1	Data read	Reads up to 16 byte from the RX buffer and copies them into the process data
				2	Data clear	Deletes all data in the RX buffer
				3	-	-
				4	-	-
				5	-	-
				6	-	-
				7	Read buffer count	Reads all counter values of the telegram buffer.
		Process data toggle bit	IX0.7	0	0	Mirrors the bit from the command (process data output). Indicates that the command has been processed.
				1	1	
IB1	Status 1	RX Buffer not empty	IX1.0	0	No	Indicates that there is data in the receive buffer. Modbus and DMX: No significance (only RX LED display), reception indicator is in bit 4 (RX Buffer telegram).
				1	Yes	
		RX Buffer full	IX1.1	0	No	Indicates that the receive buffer is almost filled (< 50 characters free).
				1	Yes	
		TX Buffer not empty	IX1.2	0	No	Indicates that there is data in the transmit buffer. Modbus and DMX: No significance
				1	Yes	
		TX Buffer full	IX1.3	0	No	Indicates that the transmit buffer is almost filled (< 50 characters free).
				1	Yes	
		RX Buffer telegram	IX1.4	0	No	Indicates that there are still entire telegrams in the receive buffer.
				1	Yes	
		Telegram end	IX1.5	0	No	Indicates that the last block of a telegram has been read.
				1	Yes	
		Module diagnosis	IX1.6	0	OK	Indicates an active diagnosis
				1	Error	
		Protokoll break	IX1.7	0	No	Indicates the reception of a break signal.
				1	Yes	
IB 2	Length	Length	IX2.0 ... IX2.4	0 ... 31		Length of RX data
	Status 2	1.4 LED	IX2.5	0	Off	
				1	On	RS232 parameterised
		3.1 LED	IX2.6	0	Off	
				1	On	RS422 parameterised
		3.3 LED	IX2.7	0	Off	
				1	On	RS485 or RS422 parameterised
IB 3 ... IB 18	RX Data			0 ... 255		

Process data outputs UR20-1COM-232-485-422-V2

Byte	Function	Name	Bit	Value	Description	Remarks
QB0	Control 0	Command TX request	QX0.0 ... QX0.2	0	Idle	-
				1	Data send	Sends the TX buffer content and the data from the current telegram
				2	Data store	Saves the current telegram data in the TX buffer
				3	Data clear	Deletes all data in the TX buffer
				4	-	-
				5	-	-
				6	Modbus configuration	Configuration of the Modbus registers for master or slave operation
				7	Clear module data	Deletes all data in the RX and TX buffers and restores all default values. Only the parameters are retained.
		-	QX0.3	0	-	-
				1	-	-
		Command RX request	QX0.4 ... QX0.6	0	Idle	-
				1	Data read	Reads up to 16 byte from the RX buffer and copies them into the process data
				2	Data clear	Deletes all data in the RX buffer
				3	-	-
				4	-	-
				5	-	-
				6	-	-
				7	Read buffer count	Reads all counter values of the telegram memory.
		Process data toggle bit	QX0.7	0	0	The commands are executed on each status change.
				1	1	
QB1	Control 1	-	QX1.0 ... QX1.7	0		
				1		
QB 2	Length	Length	QX2.0 ... QX2.4	0 ... 31		Length of TX data
	Control 2	-	QX2.5 ... QX2.7	0	-	
				1	-	
QB 3 ... QB 18	TX Data			0 ... 255		

Example: Operating mode "Custom"

The following table provide examples for sending and receiving data using the UR20-1COM-232-485-422-V2 module in operating mode "Custom". Byte B0 and B1 display the "Control" bytes (process data output) and "Status" bytes (process data input) followed by B2 for data length information. Bytes B3 to B18 contain Tx data (process data output) and Rx data (process data input). An additional example shows how to read the number of bytes available in Rx Buffer.

Example: Operating mode "Custom"

	B0					B1								B2					B3-B18	Info	
	Hex Result	Toggle	Command RX	Flow control	Command TX	Hex Result	Protocol break	Module diagnosis	Telegram end	RX Buffer telegram	TX Buffer full	TX Buffer not empty	RX Buffer full	RX Buffer not empty	Hex Result	LED 3.3	LED 3.1	LED 1.4	Length	Data		
TX Data send																					
Process data output	0x02	0	Idle	0	Data store	0x00	0	0	0	0	0	0	0	0	0x10	0	0	0	16	B3 - B18	TXD.1 - TXD.16	
Process data input	0x02	0	Idle	0	Data store	0x04	0	0	0	0	0	1	0	0	0x00	X	X	X	0	0x00		
Process data output	0x82	1	Idle	0	Data store	0x00	0	0	0	0	0	0	0	0	0x10	0	0	0	16	B3 - B18	TXD.17 - TXD.32	
Process data input	0x82	1	Idle	0	Data store	0x04	0	0	0	0	0	1	0	0	0x00	X	X	X	0	0x00		
Process data output	0x01	0	Idle	0	Data send	0x00	0	0	0	0	0	0	0	0	0x02	0	0	0	2	B3 - B4	TXD.33 - TXD.34	
Process data input	0x01	0	Idle	0	Data send	0x04	0	0	0	0	0	1	0	0	0x00	X	X	X	0	0x00		TX sending start
Process data input	0x01	0	Idle	0	Data send	0x00	0	0	0	0	0	0	0	0	0x00	X	X	X	0	0x00		TX sending finished
RX Data receive																					
Process data input	0x01	0	Idle	0	Data send	0x01	0	0	0	0	0	0	0	1	0x00	X	X	X	0	0x00		RX Buffer not empty
Process data output	0x90	1	Data read	0	Idle	0x00	0	0	0	0	0	0	0	0	0x00	0	0	0	0	0x00		
Process data input	0x90	1	Data read	0	Idle	0x01	0	0	0	0	0	0	0	1	0x10	X	X	X	16	B3 - B18	RXD.1 - RXD.16	
Process data output	0x10	0	Data read	0	Idle	0x00	0	0	0	0	0	0	0	0	0x00	0	0	0	0	0x00		
Process data input	0x10	0	Data read	0	Idle	0x00	0	0	0	0	0	0	0	0	0x02	X	X	X	2	B3 - B4	RXD.17 - RXD.18	Buffer empty
Process data input	0x10	0	Data read	0	Idle	0x20	0	0	1	0	0	0	0	0	0x00	X	X	X	0	0x00		RX Telegram end / Buffer empty
Process data input	0x10	0	Data read	0	Idle	0x20	0	0	1	0	0	0	0	0	0x00	X	X	X	0	0x00		RX Telegram end / Buffer empty
Process data input	0x10	0	Data read	0	Idle	0x20	0	0	1	0	0	0	0	0	0x00	X	X	X	0	0x00		RX Telegram end / Buffer empty
Process data input	0x10	0	Data read	0	Idle	0x31	0	0	1	1	0	0	0	1	0x00	X	X	X	0	0x00		RX Telegram end / New Telegram / Buffer not empty
Process data output	0x90	1	Data read	0	Idle	0x00	0	0	0	0	0	0	0	0	0x00	0	0	0	0	0x00		
Process data input	0x90	1	Data read	0	Idle	0x11	0	0	0	1	0	0	0	1	0x10	X	X	X	16	B3 - B18	RXD.1 - RXD.16	
Process data output	0x10	0	Data read	0	Idle	0x00	0	0	0	0	0	0	0	0	0x00	0	0	0	0	0x00		
Process data input	0x10	0	Data read	0	Idle	0x20	0	0	1	0	0	0	0	0	0x02	X	X	X	2	B3 - B4	RXD.17 - RXD.18	RX Telegramm end / Buffer empty
TX Data send & RX Data receive																					
Process data input	0x10	0	Data read	0	Idle	0x01	0	0	0	0	0	0	0	1	0x00	X	X	X	0	0x00		RX Buffer not empty
Process data output	0x92	1	Data read	0	Data store	0x00	0	0	0	0	0	0	0	0	0x10	0	0	0	16	B3 - B18	TXD.1 - TXD.16	
Process data input	0x92	1	Data read	0	Data store	0x15	0	0	0	1	0	1	0	1	0x10	X	X	X	16	B3 - B18	RXD.1 - RXD.16	
Process data output	0x12	0	Data read	0	Data store	0x00	0	0	0	0	0	0	0	0	0x10	0	0	0	16	B3 - B4	TXD.17 - TXD 32	
Process data input	0x12	0	Data read	0	Data store	0x35	0	0	1	1	0	1	0	1	0x02	X	X	X	2	B3 - B4	RXD.17 - RXD.18	RX Telegram end / Buffer not empty
Process data output	0x91	1	Data read	0	Data send	0x00	0	0	0	0	0	0	0	0	0x02	0	0	0	2	B3 - B4	TXD.33 - TXD.34	
Process data input	0x91	1	Data read	0	Data send	0x15	0	0	0	1	0	1	0	1	0x10	X	X	X	16	B3 - B18	RXD.1 - RXD.16	
Process data output	0x10	0	Data read	0	Idle	0x00	0	0	0	0	0	0	0	0	0x00	0	0	0	0	0x00		
Process data input	0x10	0	Data read	0	Idle	0x20	0	0	1	0	0	0	0	0	0x02	X	X	X	2	B3 - B4	RXD.17 - RXD.18	TX end / RX Telegramm end / Buffer empty
Raed number of data in RX Buffer																					
Process data output	0xF0	0	Read buffer count	0	Idle	0x00	0	0	0	0	0	0	0	0	0x00	0	0	0	0	0x00		
Process data input	0xF0	0	Read buffer count	0	Idle	0x05	0	0	0	0	0	1	0	1	0x08	X	X	X	8	B3, B4 B5, B6 B7, B8 B9, B10	high, low high, low high, low high, low	Number of characters in the RX buffer Number of telegrams in the RX buffer Number of characters in the TX buffer Number of configured channels

Operating mode “Modbus (Master/Slave) (RTU/ASCII)”

The following tables show configuration and communication examples for using the UR20-1COM-232-485-422-V2 module in operating mode “Modbus (Master/Slave) (RTU/ASCII)”.

Modbus Master example

Configuration						Via process data	Calculated by module	
Channel	Cycle time	Slave address	Function code	Offset	Length	Data	CRC	Break
0	100 ms	2	16	0x0123	2	2 * 16 Bit Data	Module	
1	0 = Off	6	3	0x8A65	1	1 * 16 Bit Data	Module	

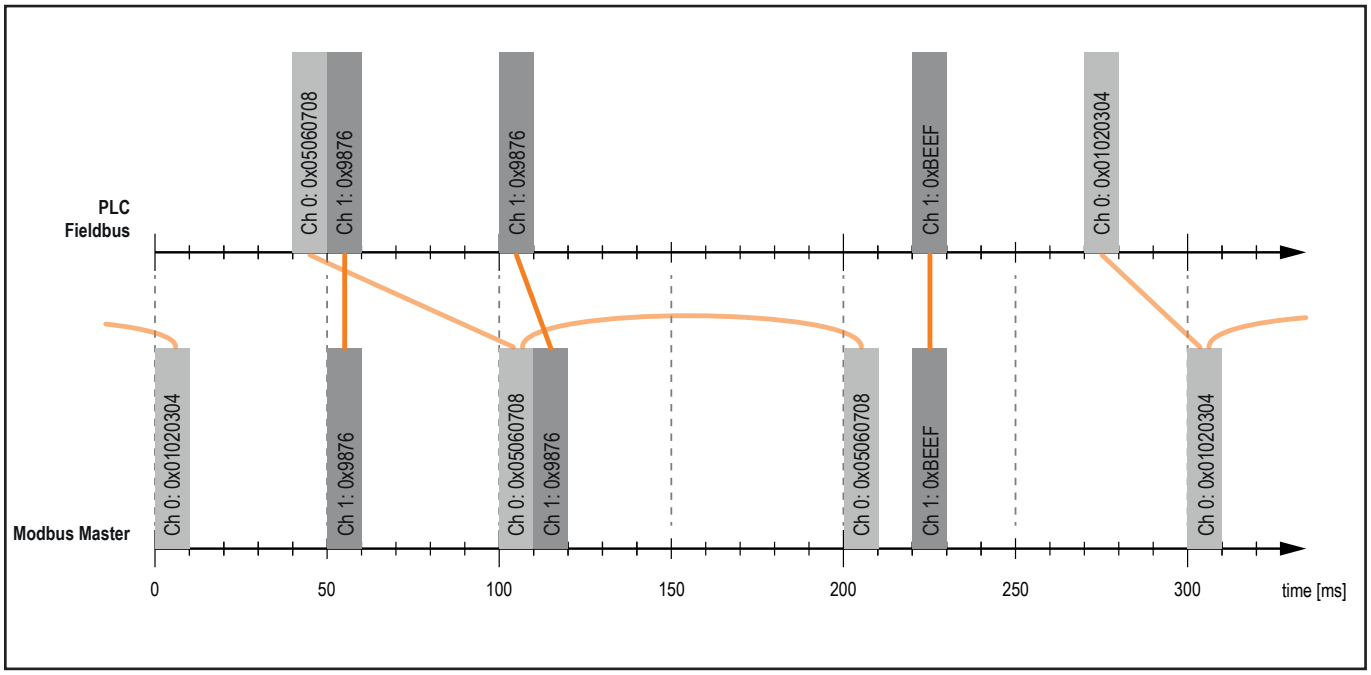

Modbus timing diagram according to example

Modbus Slave example

Configuration							Via process data
Channel	Cycle time	Slave address	Function code	Offset	Length	Access	Data
0	-	2	-	0x0123	2	Write/Read	2 * 16 Bit Data

Example: Operating mode "Modbus (Master/Slave) (RTU/ASCII)"

	B0					B1								B2					B3 – B18	Info		Example	
	Hex Result	Toggle	Command RX	Flow control	Command TX	Hex Result	Protokoll break	Module diagnosis	Telegram end	RX Buffer telegram	TX Buffer full	TX Buffer not empty	RX Buffer full	RX Buffer not empty	Hex Result	LED 3.3	LED 3.1	LED 1.4	Length	Data			
Modbus Master Konfiguration Channel 0																							
Process data output	0x06	0	Idle	0	Modbus configuration	0x00	0	0	0	0	0	0	0	0	0x10	0	0	0	16	B3	Channel Number		0x00	
																				B4, B5	Cycle Time in ms		0x00,0x64	
																				B6	Slave Address		0x02	
																				B7	Modbus Function Code		0x10	
																				B8, B9	Write	Register offset	0x01,0x23	
																				B10	Write	Bit offset	0x00	
																				B11, B12	Write	Register length	0x00,0x02	
																				B13, B14	Read	Register offset	0x00,0x00	
																				B15	Read	Bit offset	0x00	
																				B16, B17	Read	Register length	0x00,0x00	
																				B18	not used		0x00	
Process data input	0x06	0	Idle	0	Modbus configuration	0x00	0	0	0	0	0	0	0	0	0x00	X	X	X	0	0x00				
Modbus Master Konfiguration Channel 1																							
Process data output	0x86	1	Idle	0	Modbus configuration	0x00	0	0	0	0	0	0	0	0	0x10	0	0	0	16	B3	Channel Number		0x01	
																				B4, B5	Cycle Time in ms		0x00,0x00	
																				B6	Slave Address		0x06	
																				B7	Modbus Function Code		0x03	
																				B8, B9	Write	Register offset	0x00,0x00	
																				B10	Write	Bit offset	0x00	
																				B11, B12	Write	Register length	0x00,0x00	
																				B13, B14	Read	Register offset	0x8A,0x65	
																				B15	Read	Bit offset	0x00	
																				B16, B17	Read	Register length	0x00,0x01	
																				B18	not used		0x00	
Process data input	0x86	1	Idle	0	Modbus configuration	0x00	0	0	0	0	0	0	0	0	0x00	X	X	X	0	0x00				
Modbus Slave Konfiguration Channel 0																							
Process data output	0x06	0	Idle	0	Modbus configuration	0x00	0	0	0	0	0	0	0	0	0x10	0	0	0	16	B3	Channel Number		0x00	
																				B4, B5	not used		0x00,0x00	
																				B6	Slave Address		0x02	
																				B7	not used		0x00	
																				B8, B9	Register offset		0x01,0x23	
																				B10	not used		0x00	
																				B11, B12	Register length		0x00,0x02	
																				B13 – B17	not used		0x00,0x00	
																				B18	Access	Bit 0 = Write	0x03	
																						Bit 1 = Read		
Process data input	0x06	0	Idle	0	Modbus configuration	0x00	0	0	0	0	0	0	0	0	0x00	X	X	X	0	0x00				
Write channel data																							
Process data output	0x02	0	Idle	0	Data store	0x00	0	0	0	0	0	0	0	0	0x10	0	0	0	16	B3	Channel Number		0x05	
																				B4	not used		0x00	
																				B5-B18	TXD.1 - TXD.14			
Process data input	0x02	0	Idle	0	Data store	0x00	0	0	0	0	0	0	0	0	0x00	X	X	X	0	0x00				
Process data output	0x82	1	Idle	0	Data store	0x00	0	0	0	0	0	0	0	0	0x10	0	0	0	16	B3-B18	TXD.15 - TXD.30			
Process data input	0x82	1	Idle	0	Data store	0x00	0	0	0	0	0	0	0	0	0x00	X	X	X	0	0x00				
Process data output	0x01	0	Idle	0	Data send	0x00	0	0	0	0	0	0	0	0	0x02	0	0	0	2	B3-B18	TXD.31 - TXD.32			
Process data input	0x01	0	Idle	0	Data send	0x00	0	0	0	0	0	0	0	0	0x00	X	X	X	0	0x00				

Example: Operating mode "Modbus (Master/Slave) (RTU/ASCII)"

	B0					B1								B2					B3 – B18	Info	Example	
	Hex Result	Toggle	Command RX	Flow control	Command TX	Hex Result	Protokoll break	Module diagnosis	Telegram end	RX Buffer telegram	TX Buffer full	TX Buffer not empty	RX Buffer full	RX Buffer not empty	Hex Result	LED 3.3	LED 3.1	LED 1.4	Length	Data			
Read channel data																						
Process data input	0x01	0	Idle	0	Data send	0x10	0	0	0	1	0	0	0	0	0x00	X	X	X	0	0x00			Data has changed on a channel
Process data output	0x90	1	Data read	0	Idle	0x00	0	0	0	0	0	0	0	0	0x00	0	0	0	0	B3	Channel Request Number	0xFF	Channel Req. 0x00-0xFE / 0xFF get next changed
																				0x00			
Process data input	0x90	1	Data read	0	Idle	0x10	0	0	0	1	0	0	0	0	0x10	0	0	0	16	B3	Channel Response Number	0x05	
																				B4	Channel Diag	0x00	
																				B5-B18	RXD.1 - RXD.14		
Process data output	0x10	0	Data read	0	Idle	0x00	0	0	0	0	0	0	0	0	0x00	0	0	0	0	0x00			
Process data input	0x10	0	Data read	0	Idle	0x30	0	0	1	1	0	0	0	0	0x02	X	X	X	2	B3-B4	RXD.15 - RXD.16		Data has changed on a channel / channel has been read completely
Process data output	0x90	1	Data read	0	Idle	0x00	0	0	0	0	0	0	0	0	0x00	0	0	0	0	B3	Channel Request Number	0xFF	Channel Req. 0x00-0xFE / 0xFF get next changed
																				0x00			
Process data input	0x90	1	Data read	0	Idle	0x00	0	0	0	0	0	0	0	0	0x10	0	0	0	16	B3	Channel Response Number	0x07	
																				B4	Channel Diag	0x00	
																				B5-B18	RXD.1 - RXD.14		
Process data output	0x10	0	Data read	0	Idle	0x00	0	0	0	0	0	0	0	0	0x00	0	0	0	0	0x00			
Process data input	0x10	0	Data read	0	Idle	0x20	0	0	1	0	0	0	0	0	0x02	X	X	X	2	B3-B4	RXD.15 - RXD.16		No more changed data / channel read completely

To clear a configured channel, it is necessary to send a configuration telegram with length 16, channel number and the rest data filled with 0x00.

Range of values für channel request number and channel diagnosis:

	Values	Content
Channel Request Number	0x00 - 0xFE	Request the data of the channel
	0xFF	Request the first changed new channel data. The search starts at channel 0 to channel 254.
Channel Response Number	0x00 - 0xFE	Channel number response
Channel Diag	0x00 - 0x0F	Channel diagnostic code
	0	No diagnostic
	1	Master has received Modbus response code 1
	2	Master has received Modbus response code 2
	3	Master has received Modbus response code 3
	4	Master has received Modbus response code 4
	5	No response from slave
	6	Protokoll timeout
	7	Invalid channel
	8	Invalid slave address
	9	Invalid function code
	10	Invalid register
	11	Invalid length
	12	Invalid value
	13	Invalid CRC
	14	reserved
	15	reserved

Example: Operating mode "DMX (Master/Slave)"

The following table shows communication examples for read and write data via an RS485 interface using the UR20-1COM-232-485-422-V2 module in operation mode "DMX Master" or "DMX slave".

Example: Operating mode "DMX (Master/Slave)"

	B0					B1								B2					B3 – B18	Info	Example
	Hex Result	Toggle	Command RX	Flow control	Command TX	Hex Result	Protocol break	Module diagnosis	Telegram end	RX Buffer telegram	TX Buffer full	TX Buffer not empty	RX Buffer full	RX Buffer not empty	Hex Result	LED 3.3	LED 3.1	LED 1.4	Length	Data		
Write channel data																					
Process data output	0x01	0	Idle	0	Data send	0x00	0	0	0	0	0	0	0	0	0x07	0	0	0	7	B3,B4	Start Channel (0 – 512)	0x00,0x10
																				B5,B6	Number of Channels (1 – 513)	0x00,0x03
																				B7 – B9	Channel 16 – Channel 18	
Process data input	0x01	0	Idle	0	Data send	0x04	0	0	0	0	0	1	0	0	0x00	X	X	X	0	0x00		
Process data output	0x82	1	Idle	0	Data store	0x00	0	0	0	0	0	0	0	0	0x10	0	0	0	16	B3,B4	Start Channel (0 – 512)	0x00,0x10
																				B5,B6	Number of Channels (1 – 513)	0x00,0x1E
																				B7 – B18	Channel 16 – Channel 27	
Process data input	0x82	1	Idle	0	Data store	0x04	0	0	0	0	0	1	0	0	0x00	X	X	X	0	0x00		
Process data output	0x02	0	Idle	0	Data store	0x00	0	0	0	0	0	0	0	0	0x10	0	0	0	16	B3 – B18	Channel 28 – Channel 43	
Process data input	0x02	0	Idle	0	Data store	0x04	0	0	0	0	0	1	0	0	0x00	X	X	X	0	0x00		
Process data output	0x81	1	Idle	0	Data send	0x00	0	0	0	0	0	0	0	0	0x02	0	0	0	2	B3 – B4	Channel 44 – Channel 45	
Process data input	0x81	1	Idle	0	Data send	0x04	0	0	0	0	0	1	0	0	0x00	X	X	X	0	0x00		
Read specific channel data (for Example Start at Channel16 Length of 3)																					
Process data input	0x81	1	Idle	0	Data send	0x10	0	0	0	1	0	0	0	0	0x00	X	X	X	0	0x00		
Process data output	0x10	0	Data read	0	Idle	0x00	0	0	0	0	0	0	0	0	0x04	0	0	0	4	B3,B4	Start Channel (0 – 512)	0x00,0x10
																				B5,B6	Number of Channels (1 – 513)	0x00,0x03
Process data input	0x10	0	Data read	0	Idle	0x20	0	0	1	0	0	0	0	0	0x07	0	0	0	7	B3,B4	Start Channel (0 – 512)	0x00,0x10
																				B5,B6	Number of Channels (1 – 513)	0x00,0x03
																				B7 – B9	Channel 16 – Channel 18	
Read parameterized channel data (for Example Start at Channel16 Length of 17)																					
Process data input	0x10	0	Idle	0	Data send	0x10	0	0	0	1	0	0	0	0	0x00	X	X	X	0	0x00		
Process data output	0x90	1	Data read	0	Idle	0x00	0	0	0	0	0	0	0	0	0x04	0	0	0	4	B3,B4	Request Channel use Param	0xFF,0xFF
																				B5,B6	Request Number of Channels use Param	0xFF,0xFF
Process data input	0x90	1	Data read	0	Idle	0x10	0	0	0	1	0	0	0	0	0x10	0	0	0	16	B3,B4	Start Channel (used Param)	0x00,0x10
																				B5,B6	Number of Channels (used Param)	0x00,0x11
																				B7 – B18	Channel 16 – Channel 27	
Process data output	0x10	0	Data read	0	Idle	0x00	0	0	0	0	0	0	0	0	0x00	0	0	0	0	0x00		
Process data input	0x10	0	Data read	0	Idle	0x20	0	0	1	0	0	0	0	0	0x05	0	0	0	5	B3 – B7	Channel 28 – Channel 32	

6.82 Communication module UR20-1COM-SAI-PRO

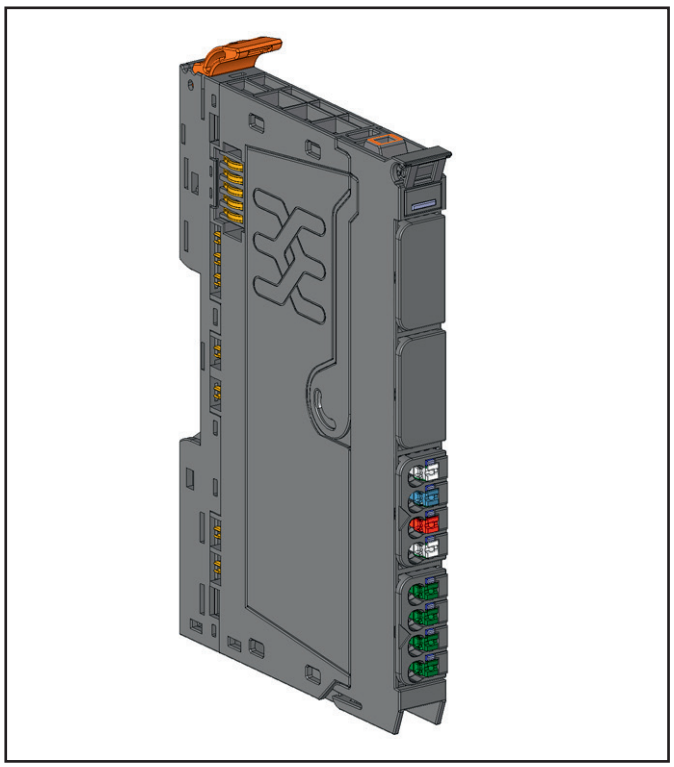

Communication module UR20-1COM-SAI-PRO (Item No. 2007430000)

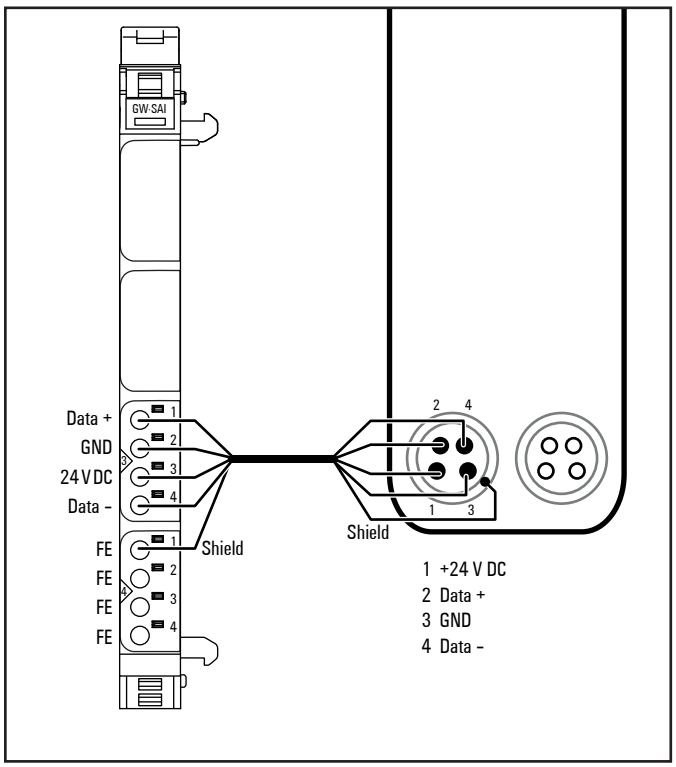

Connection diagram UR20-1COM-SAI-PRO

Up to 15 subbus modules type SAI Active Universal Pro can be connected to the u-remote station via the UR20-1COM-SAI-PRO communication module. All connected subbus modules have to be considered as active modules when planning the u-remote station.
The subbus modules can be placed in a IP67 surrounding. The distance between the UR20 communication module and the last connected subbus module should not exceed 50 metres (164 ft).
The module electronics of the communication module supply the connected SAI subbus modules with 24 V DC (max. 2.5 A) from the input current path (I_{IN}). The communication status is indicated by two LEDs. The SAI subbus modules as well as the UR20 modules are visible on the web server.
The first subbus module is connected with its input (4-pole plug M8 or M12) to the number 3 connector of the communication module (see connection diagram and pin assignment). The shielding is placed at the FE connections on number 4 plug of the communication module and the body of the subbus module.
The output of the last module of the subbus chain has to be covered with a terminating resistor (Item No. 1955340000).

The SAI Aktiv Pro Universal manual (Item No. 5658740000) is available for download from the Weidmüller website.

Pin assignment 4-pole connector (male) on SAI-PRO subbus

UR20	SAI IN Pin	Cable colour	Function
3.1	2	White	Data +
3.2	3	Blue	GND
3.3	1	Brown	+24 V DC
3.4	4	Black	Data -

In combination with a UR20-FBC-PL fieldbus coupler, the UR20-1COM-SAI-PRO must not be configured as the first IO module.

A maximum of 3 of the following module types may be installed in a u-remote station, either of the same type or mixed:
- UR20-1COM-SAI-PRO
- UR20-4COM-IO-LINK

The module will not operate unless at least one subbus module is connected.

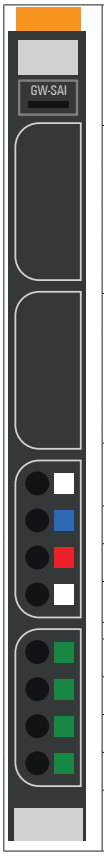

	Module status LED Green: Communication on system bus Red: Error
3.1	Yellow flashing (0.5 Hz): Subbus communication is being initialised Yellow: Subbus communication OK
3.2	Red: Supply voltage error
3.3	Green: Supply voltage OK
3.4	Red: Subbus communication error

LED indicators UR20-1COM-SAI-PRO, troubleshooting see Chapter 12

Connectable subbus modules

SAI-AU M8 SB 8DI	SAI-AU M12 SB 4AI
SAI-AU M8 SB 8DIO	SAI-AU M12 SB 4AO
SAI-AU M8 SB 8DO 2A	SAI-AU M12 SB 4PT100
SAI-AU M12 SB 8DI	SAI-AU M12 SB 2CNT
SAI-AU M12 SB 8DIO	SAI-AU M12 SB 4THERMO
SAI-AU M12 SB 8DO 2A	

The subbus modules have to be connected using shielded cables (e.g. Weidmüller Item No. 198191xxxx)! The maximum cable length depends on the subbus structure (see documentation of the subbus modules).
Shielding has to be designed as described in the chapter “Earthing and Shielding”.

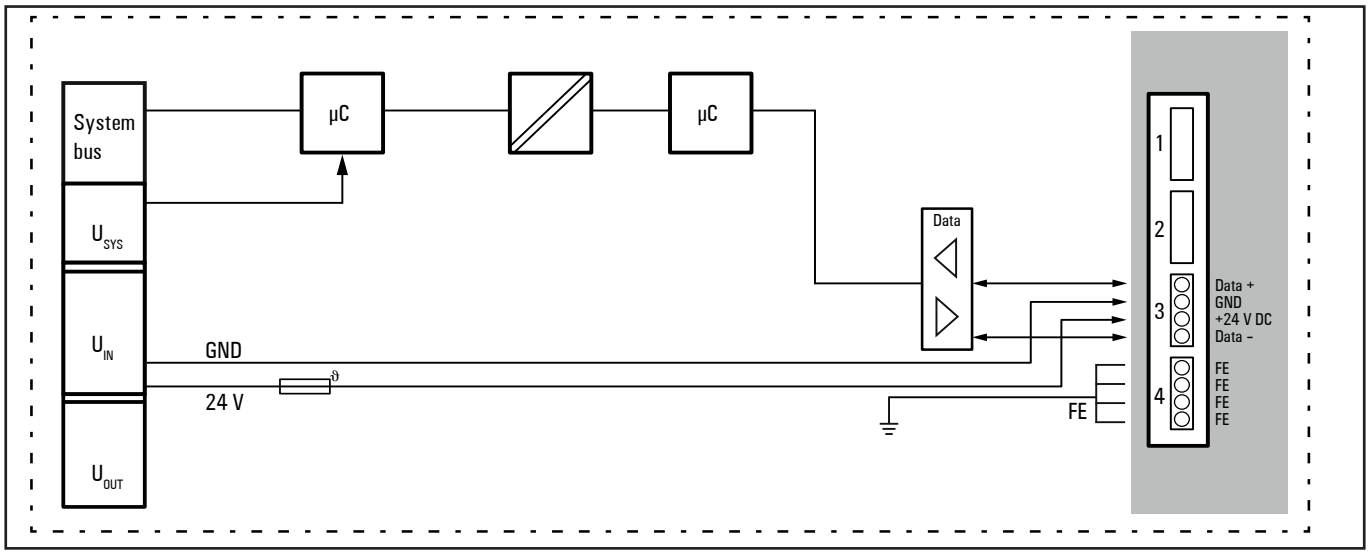

Block diagram UR20-1COM-SAI-PRO

Technical data UR20-1COM-SAI-PRO (Item No. 2007430000)

System data	
Data	Process, parameter and diagnostic data depend on the coupler used, see coupler description.
Interface	u-remote system bus
System bus transfer rate	48 Mbps
SAI Interface	
Number	1
Type	SAI-PRO Subbus
Transfer rate	250 kBps
Supply voltage	+24 V DC
Current of power supply output	max. 2.5 A
Short-circuit-proof	yes
Module diagnosis	yes
Individual channel diagnosis	Diagnosis of the subbus modules
Supply	
Supply voltage	24 V DC +20 %/-15 %
Current consumption from system current path I_{SYS}	8 mA
Current consumption from input current path I_{IN}	17 mA + SAI supply current
General data	
Weight (operational status)	87 g
For additional general data see Section 3.4	

Diagnostic data UR20-1COM-SAI-PRO

Name	Byte	Bit	Description	Default
Error indikator	0	0	Module error	
		1	Internal error	
		2	External error	
		3	Channel error	0
		4	Error	
		5	Power supply fault	0
		6	Reserved	0
		7	Reserved	
Module type	1	0	Module Type 0x05	1
		1		0
		2		1
		3		0
		4	Reserved	1
		5	Reserved	0
		6	Reserved	0
		7	Reserved	0
Error byte 2	2	0 ... 7	Reserved	0
Error byte 3	3	0 ... 3	Reserved	0
		4	Communication fault	0
		5	Hot Plug	0
		5	Reserved	0
		7	New Subbus Diag	0
Channel type	4	0	Channel type 0x79	1
		1		0
		2		0
		3		1
		4		1
		5		1
		6		1
		7		0
Diagnostic bits per channel	5		Number of diagnostic bit per channel	8
Number of channels	6		Number of similar channels per module	1
Channel error	7	0	Error at channel 0	0
	8 ... 10	1 ... 31	Reserved	
Channel 0 error	11	0	Subbus scanning	
		1	Subbus communication error	
		2 ... 5	Reserved	
		6	Subbus over current	
		7	Reserved	
Channel 1 error ... Channel 31 error	12 ... 42	0 ... 7	Reserved	0
Time stamp	43-46		Time stamp [µs] (32bit)	

Output behaviour on fieldbus error

The output behavior in the event of a fieldbus error can be parameterised in the subbus module. In addition, the behaviour can be set by a coupler parameter in the fieldbus coupler of the station. The interaction of the two parameter settings is shown in the following table.

Coupler parameter	Module parameter SAI Subbus	Result
All Outputs Off	Hold last value	All Outputs Off
All Outputs Off	Enabled substitute value	All Outputs Off
Enabled substitute value	Hold last value	All Outputs Off
Enabled substitute value	Enabled substitute value	Enabled substitute value[1)]
Hold last value	Hold last value	Hold last value
Hold last value	Enabled substitute value	Hold last value

1) Before the substitute value is enabled, process data will shortly go to zero.

6.83 Communication module UR20-1COM-SAI-PRO-V2

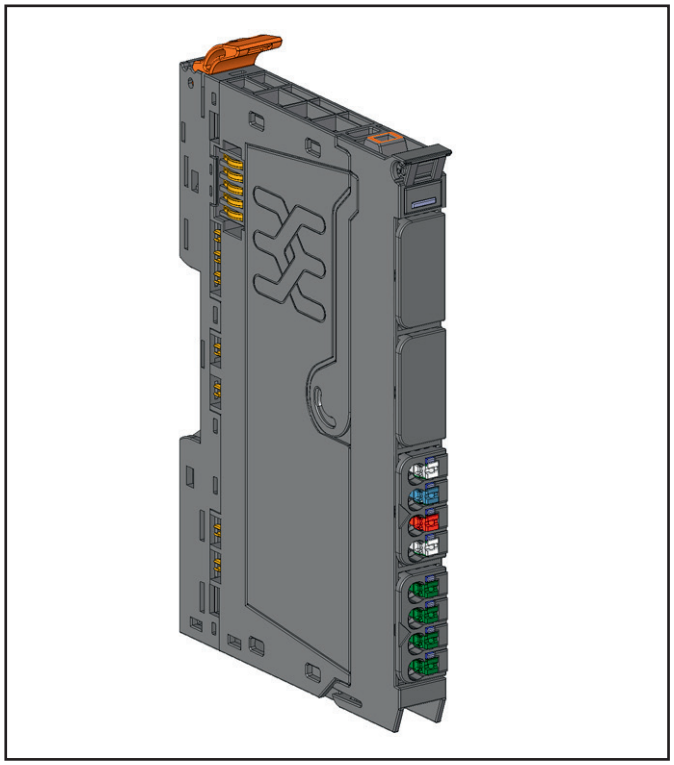

Communication module UR20-1COM-SAI-PRO-V2 (Item No. 3116480000)

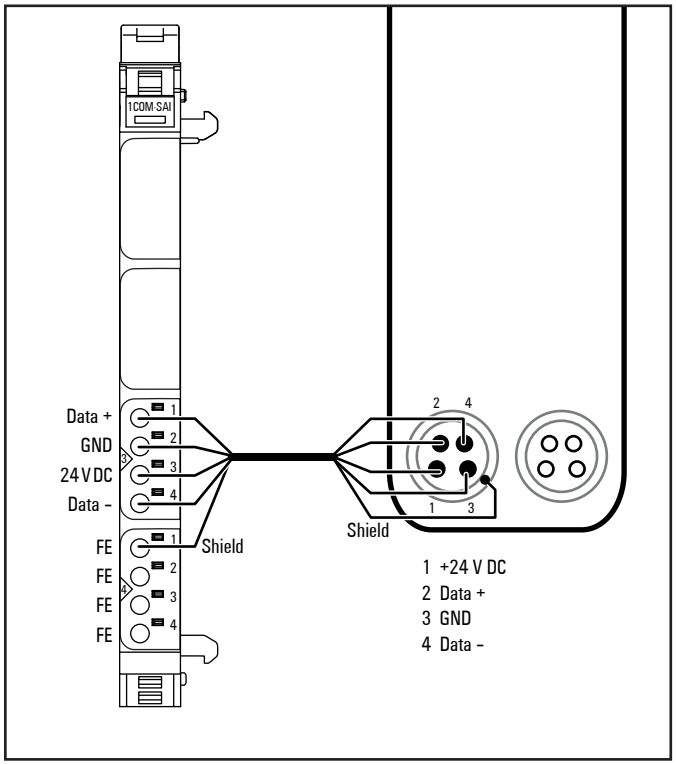

Connection diagram UR20-1COM-SAI-PRO-V2

Up to 15 subbus modules type SAI Active Universal Pro can be connected to the u-remote station via the UR20-1COM-SAI-PRO-V2 communication module. The subbus modules can be placed in a IP67 surrounding. The distance between the UR20 communication module and the last connected subbus module should not exceed 50 metres (164 ft). All connected subbus modules have to be considered as active modules when planning the u-remote station.
The module electronics of the communication module supply the connected SAI subbus modules with 24 V DC (max. 2.5 A) from the input current path (I_{IN}). The communication status is indicated by two LEDs. The SAI subbus modules as well as the UR20 modules are visible on the web server.
The first subbus module is connected with its input (4-pole plug M8 or M12) to the number 3 connector of the communication module (see connection diagram and pin assignment). The shielding is placed at the FE connections on number 4 plug of the communication module and the body of the subbus module.
The output of the last module of the subbus chain has to be covered with a terminating resistor (Order No. 1955340000).

Pin assignment 4-pole connector (male) on SAI-PRO subbus

UR20	SAI IN Pin	Cable colour	Function
3.1	2	White	Data +
3.2	3	Blue	GND
3.3	1	Brown	+24 V DC
3.4	4	Black	Data -

In combination with a UR20-FBC-PL fieldbus coupler, the UR20-1COM-SAI-PRO-V2 must not be configured as the first IO module.

The module will not operate unless at least one subbus module is connected.

Please also observe the respective subbus modules manual:
- SAI Aktiv Pro Universal manual (5658740000)
- V2 modules: SAI-AU SB manual (3163410000)

You can find the documents in the Weidmüller Support Center.



	Module status LED Green: Communication on system bus Red: Error
3.1	Yellow flashing (0.5 Hz): Subbus communication is being initialised Yellow: Subbus communication OK
3.2	Red: Supply voltage error
3.3	Green: Supply voltage OK
3.4	Red: Subbus communication error

LED indicators UR20-1COM-SAI-PRO-V2, troubleshooting see Chapter 12

Connectable subbus modules

SAI-AU M8 SB 8DI	SAI-AU M8 SB 8DI-V2
SAI-AU M8 SB 8DIO	SAI-AU M8 SB 8DIO-V2
SAI-AU M8 SB 8DO 2A	SAI-AU M8 SB 8DO 2A-V2
SAI-AU M12 SB 8DI	SAI-AU M12 SB 8DI-V2
SAI-AU M12 SB 8DIO	SAI-AU M12 SB 8DIO-V2
SAI-AU M12 SB 8DO 2A	SAI-AU M12 SB 8DO 2A-V2
SAI-AU M12 SB 4AI	SAI-AU M12 SB 4AI-V2
SAI-AU M12 SB 4AO	SAI-AU M12 SB 4AO-V2
SAI-AU M12 SB 4PT100	
SAI-AU M12 SB 2CNT	
SAI-AU M12 SB 4THERMO	

The subbus modules have to be connected using shielded cables (e.g. Weidmüller Order No. SAIL-M8GM8G-4S-x)! The maximum cable length depends on the subbus structure (see documentation of the subbus modules).
Shielding has to be designed as described in the chapter “Earthing and Shielding”.

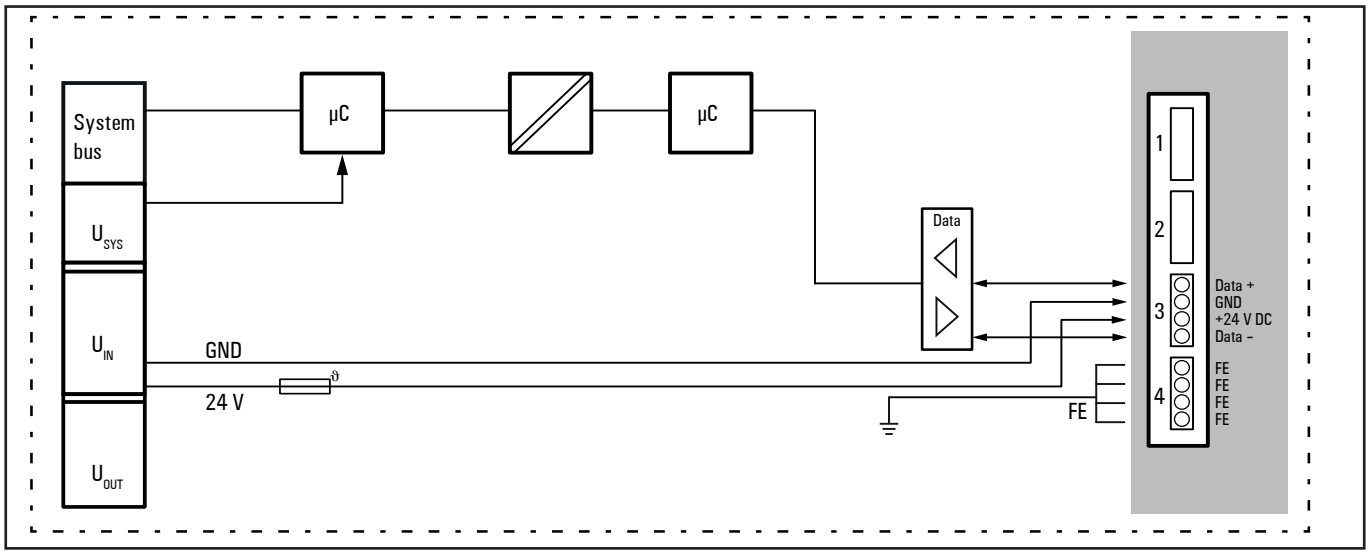

Block diagram UR20-1COM-SAI-PRO-V2

Technical data UR20-1COM-SAI-PRO-V2 (Item No. 3116480000)

System data	
Data	Process, parameter and diagnostic data depend on the coupler used, see coupler description.
Interface	u-remote system bus
System bus transfer rate	48 Mbps / 192 MHz
SAI Interface	
Number	1
Type	SAI-PRO Subbus
Transfer rate	250 kBps
Supply voltage	+24 V DC
Current of power supply output	max. 2.5 A
Short-circuit-proof	yes
Module diagnosis	yes
Individual channel diagnosis	Diagnosis of the subbus modules
Supply	
Supply voltage	24 V DC +20 %/-15 %
Current consumption from system current path I_{SYS}	8 mA
Current consumption from input current path I_{IN}	17 mA + SAI supply current
General data	
Weight (operational status)	87 g
For additional general data see Section 3.4	

Diagnostic data UR20-1COM-SAI-PRO-V2

Name	Byte	Bit	Description	Default
Error indikator	0	0	Module error	
		1	Internal error	
		2	External error	
		3	Channel error	0
		4	Error	
		5	Power supply fault	0
		6	Reserved	0
		7	Reserved	
Module type	1	0	Module Type 0x05	1
		1		0
		2		1
		3		0
		4	Reserved	1
		5	Reserved	0
		6	Reserved	0
		7	Reserved	0
Error byte 2	2	0 ... 7	Reserved	0
Error byte 3	3	0 ... 3	Reserved	0
		4	Communication fault	0
		5	Hot Plug	0
		5	Reserved	0
		7	New Subbus Diag	0
Channel type	4	0	Channel type 0x79	1
		1		0
		2		0
		3		1
		4		1
		5		1
		6		1
		7		0
Diagnostic bits per channel	5		Number of diagnostic bit per channel	8
Number of channels	6		Number of similar channels per module	1
Channel error	7	0	Error at channel 0	0
	8 ... 10	1 ... 31	Reserved	
Channel 0 error	11	0	Subbus scanning	
		1	Subbus communication error	
		2 ... 5	Reserved	
		6	Subbus over current	
		7	Reserved	
Channel 1 error ... Channel 31 error	12 ... 42	0 ... 7	Reserved	0
Time stamp	43-46		Time stamp [µs] (32bit)	

Output behaviour on fieldbus error

The output behavior in the event of a fieldbus error can be parameterised in the subbus module. In addition, the behaviour can be set by a coupler parameter in the fieldbus coupler of the station. The interaction of the two parameter settings is shown in the following table.

Coupler parameter	Module parameter SAI Subbus	Result
All Outputs Off	Hold last value	All Outputs Off
All Outputs Off	Enabled substitute value	All Outputs Off
Enabled substitute value	Hold last value	All Outputs Off
Enabled substitute value	Enabled substitute value	Enabled substitute value[1)]
Hold last value	Hold last value	Hold last value
Hold last value	Enabled substitute value	Hold last value

1) Before the substitute value is enabled, process data will shortly go to zero.

6.84 Communication module UR20-1COM-CANOPEN

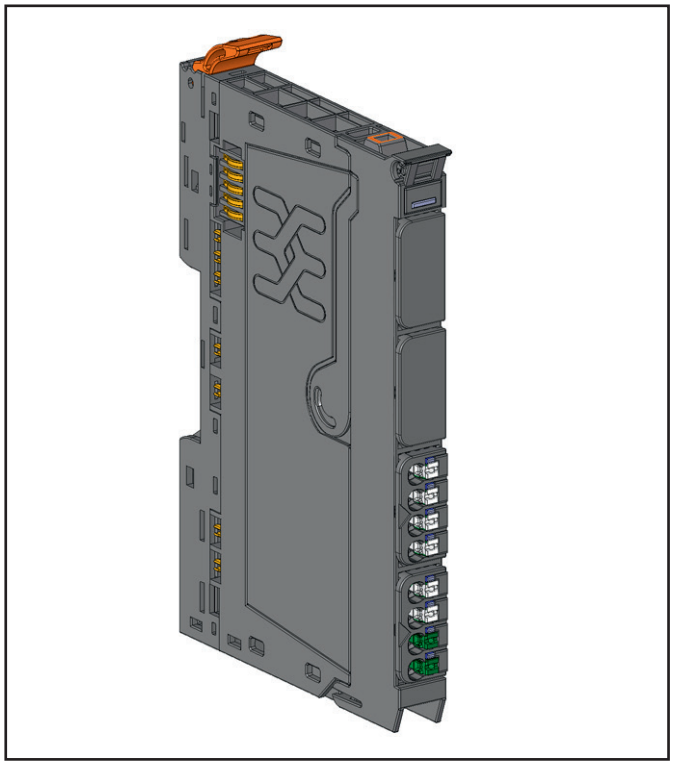

Communication module UR20-1COM-CANOPEN (Item No. 2489840000)

The UR20-1COM-CANOPEN communication module enables the connection of CANopen-capable or CAN-capable devices with a u-remote station. The number of UR20-1COM-CANOPEN modules that can be installed in a u-remote station depends on the maximum process data size of the fieldbus coupler used. The module has a galvanic isolated CAN interface and can work in the following 4 operating modes:

- manager
- device
- transparent
- listen only

The desired operating mode can be parameterised in the web server. Alternatively, the operating mode can also be set via the coupler's higher-level fieldbus or Industrial Ethernet network.
In all four operating modes, the module implements the defined functional scope of CiA specification 102. The cable length between the UR20-1COM-CANOPEN module and the connected CAN devices depends on the baud rate used. The same baud rate must also be set in all devices to be connected. The module supports baud rates between 10 kbit/s and 1 Mbit/s, see table cable length. If the module operates in device mode, automatic detection of the baud rate is also supported in accordance with CiA specification 801. If the UR20-1COM-CANOPEN module is placed at the beginning or at the end of the CAN bus, an integrated termination resistor can be parameterised in the web server.

Manager mode

In manager mode, the UR20-1COM-CANOPEN module operates as a protocol gateway between the higher-level fieldbus or the Industrial Ethernet protocol of the coupler and the lower-level CANopen fieldbus on the UR20-1COM-CANOPEN module. In this operating mode, the module works as a CANopen manager according to CiA specification 301 and controls a CANopen sub-bus with up to 16 CANopen participants as an NMT manager according to CiA specification 302.
The CANopen fieldbus and the CANopen devices connected to it can be configured and managed in the seperatly available u-mation configurator software and the included CANopen configurator. The process data mapping can also be set in the CANopen configurator.

You can download the software from the Weidmüller website.

Device mode

In device mode, the UR20-1COM-CANOPEN module works as a protocol gateway between the higher-level fieldbus or the Industrial Ethernet protocol of the coupler and the lower-level CANopen fieldbus on the UR20-1COM-CANOPEN module. In this operating mode, the module is a CANopen device according to CiA specification 301.
In device mode, the module communicates as a participant of a CANopen sub-bus in the higher-level CANopen fieldbus. The process data mapping takes place between the higher-level and lower-level fieldbus in both directions. The lower-level fieldbus must be configured by the separate CANopen manager.
The module parameters are configured via the web server or the higher-level fieldbus. According to CiA specification 306-1, the Electronic Data Sheet (EDS) for configuring the module in device mode is available, see Weidmüller product catalogue.

Transparent mode and listen only mode

In transparent mode and in listen only mode, the UR20-1COM-CANOPEN module operates according to ISO 11898-1. The module works as a CAN frame gateway or CAN interface between the coupler's higher-level fieldbus or Industrial Ethernet network and the lower-level CAN bus on the UR20-1COM-CANOPEN module.
In **transparent mode**, the UR20-1COM-CANOPEN module works as an active node in the CAN network and can transmit and receive.
In **listen only mode**, the module works as a passive node and can only receive. In order to restrict the reception of CAN messages, 8 filter banks with configurable CAN identifiers

and masks are available. The communication status is indicated by two LEDs.

Signalling and connection

In manager mode and in device mode, the signalling is implemented according to CiA specification 303-3. In transparent mode and in listen only mode, the LEDs indicate the status of the transmit buffer and the receive buffer.
The CANopen bus is connected to connector 3 of the module. The ground connection of the CANopen bus cable and the shield are connected to connector 4 of the module.

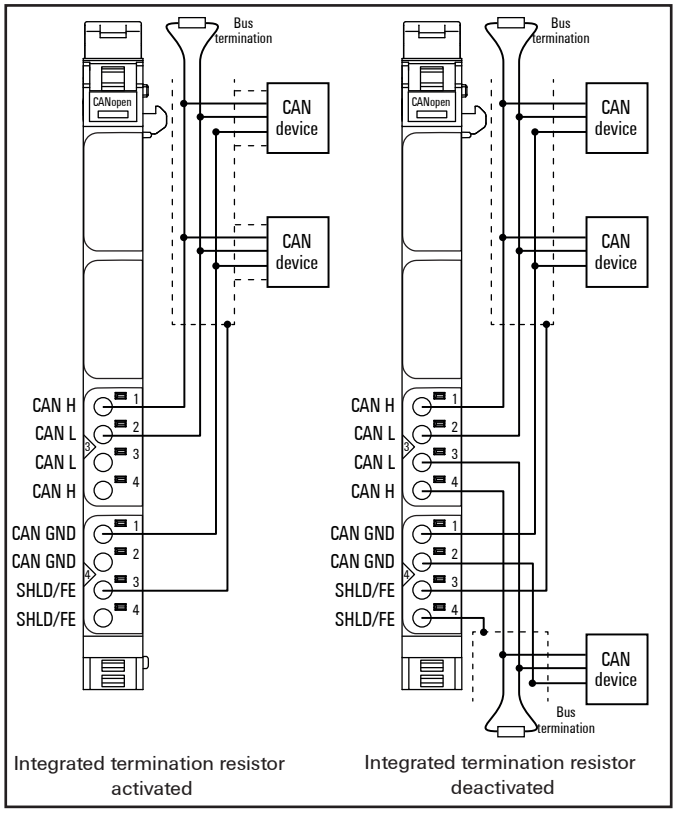

Connection diagram UR20-1COM-CANOPEN independent of operating mode

The CAN devices have to be connected using shielded fieldbus cables! Shielding has to be designed as described in the chapter “Earthing and Shielding”.



	Module status LED Green: Communication over the system bus Red: Error
3.1	LED indicators depend on operating mode, see tables below
3.2	LED indicators depend on operating mode, see tables below

LED indicators UR20-1COM-CANOPEN, troubleshooting see Chapter 12

LED indicators manager mode and device mode		
3.1	CAN Run LED	**Green:** Device in status OPERATIONAL **Green blinking**: Device in status PRE-OPERATIONAL **Green single flash**: Device in status STOPPED
3.2	CAN Error LED	**Red**: Bus-off **Off:** Device is running **Red blinking**: Configuration error **Red single flash**: At least one of the error counters of the CAN controller has reached or exceeded the warning level. **Red double flash**: Guard event or heartbeat event **Red quadruple flash**: An expected PDO has not been received before the event-timer elapsed

LED indicators transparent mode and listen only mode		
3.1	CAN Run LED	**Green:** There is RX data in the buffer **Off:** There is no RX data in the buffer
3.2	CAN Error LED	**Red**: There is TX data in the buffer **Off:** There is no TX data in the buffer

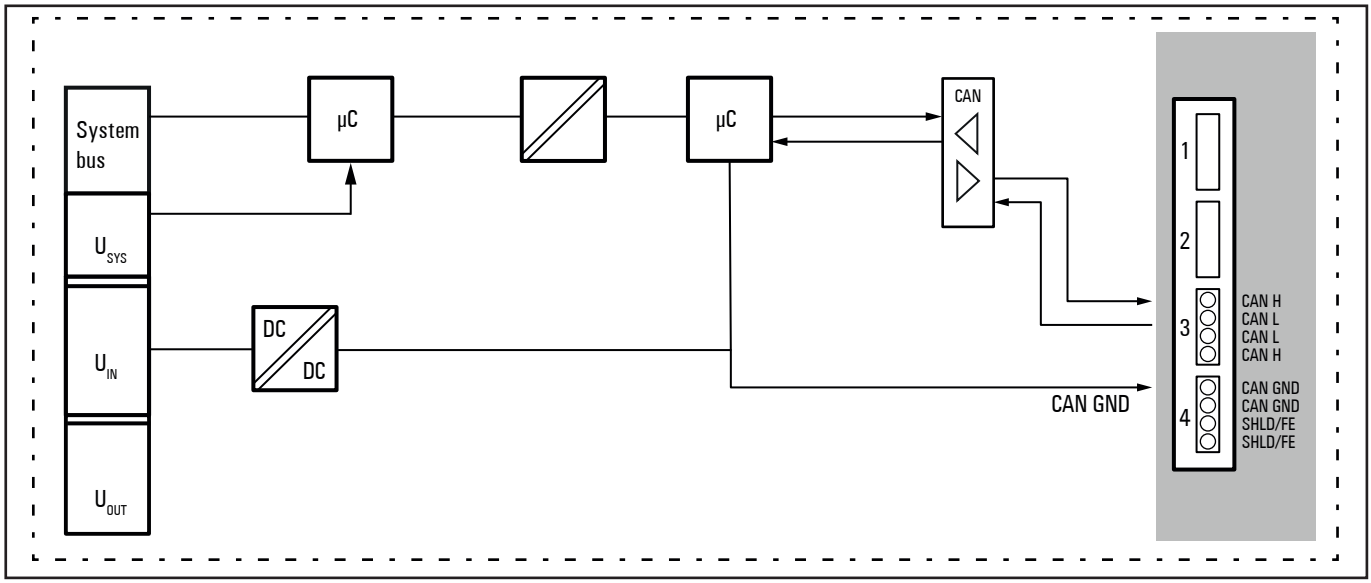

Block diagram UR20-1COM-CANOPEN

Technical data UR20-1COM-CANOPEN (Item No. 2489840000)

System data	
Data	Process, parameter and diagnostic data depend on the coupler used, see the table in Section 4.11.
Interface	u-remote system bus
System bus transfer rate	48 Mbps / 192 Mbps
CAN interface	
Number	1
Type	1x CANopen, parametrisable
Connection	CANopen according to CiA DS-301 based on ISO 11898
Transfer rate	10 / 20 / 50 / 100 / 125 / 250 / 500 / 800 / 1000 kBit/s / Auto baud rate (only device mode)
Receive buffer	36 telegrams
Transmit buffer	40 telegrams
CAN identifier	11 Bit
Terminating resistor sub-bus	120 Ω, parameterisable
Module diagnosis	yes
Individual channel diagnosis	yes
Supply	
Supply voltage	24 V DC +20 %/-15 %, over the system bus
Current consumption from input current path I_{SYS}	8 mA
Current consumption from input current path I_{IN}	30 mA
General data	
Weight (operational status)	88 g
For additional general data, see Section 3.4	

Overview of the editable parameters UR20-1COM-CANOPEN

Channel	Description	Options	Default
0	Process data length inputs	3 ... 128 Byte	18
0	Process data length outputs	3 ... 128 Byte	18
0	Operation mode	disabled (0) / listen only (1) / transparent (2), CANopen device (3) / CANopen manager (4	disabled
0	Station nr. device	1 ... 127	127
0	Baud rate in kBit/s	000 (0) / 800 (1) / 500 (2) / 250 (3) / 125 (4) / 100 (5) / 50 (6) / 20 (7) / 10 (8) / Auto baud rate (only device mode) (9)	250 (3)
0	CAN bus termination	enabled (0) / disabled (1)	disabled
0	RX Filter 1 ... 8	enabled (0) / disabled (1)	disabled
	RX CAN ID 1 ... 8	0 ... 2047	0
	RX Maske 1 ... 8	0 ... 2047	2047

Overview of editable parameters depending on the operation mode UR20-1COM-CANOPEN

Paramter	CANopen manager	CANopen device	transparent	listen only
Node-ID	u-mation configurator	User	Not used	Not used
Baud rate	u-mation configurator	User	User (Auto - not allowed)	User (Auto - not allowed)
Termination	User	User	User	User
RX Filter 1 ... 8	Not used	Not used	User	User
RX CAN ID 1 ... 8	Not used	Not used	User	User
RX Mask 1 ... 8	Not used	Not used	User	User

Cable length depending on the baud rate

Baud rate	Cable length
10 kbit/s	5000 m
20 kbit/s	2500 m
50 kbit/s	1000 m
100 kbit/s	625 m
125 kbit/s	500 m
250 kbit/s	250 m
500 kbit/s	100 m
800 kbit/s	50 m
1 Mbit/s	25 m

Diagnostic data UR20-1COM-CANOPEN

Name	Byte	Bit	Description		Default
Error indicator	0	0	Module error		
		1	Internal error		
		2	External error		
		3	Channel error		0
		4	Error		
		5	Power supply fault		0
		6	Reserved		0
		7	Parameter error		
Module type	1	0	Module Type 0x08		0
		1			0
		2			0
		3			1
		4	Channel information available		1
		5	Reserved		0
		6	Reserved		0
		7	Reserved		0
Error byte 2	2	0 ... 6	Reserved		0
		7	CAN event in queue[1)]		0
Error byte 3	3	0 ... 2	Reserved		0
		3	Internal diagnostic FIFO full		0
		4	Communication fault		0
		5	Reserved		0
		6	Reserved		0
		7	Reserved		0
Channel type	4	0	Channel type 0x7E		0
		1			1
		2			1
		3			1
		4			1
		5			1
		6			1
		7	Reserved		0
Diagnostic bits per channel	5		Number of diagnostic bits per channel		32
Number of channels	6		Number of similar channels per module		1
Channel error	7	0	Error at channel 0		0
		1 ... 7	Reserved		0
Channel error	8 ... 10	0 ... 31	Reserved		0
Channel 0 error	11	0	General error	CAN passiv	0
		1		CAN bus-off	
		2		CAN-Stack initialization failed	
		3		Buffer overflow	
		4	Error (listen only or transparent mode)	Transmission failed	0
		5		Receiving failed	
		6	Error (manager mode)	Load/store configuration failed	0
		7		NMT command failed	

1) You can find more information about this event in the u-mation configurator.

Diagnostic data UR20-1COM-CANOPEN

Name	Byte	Bit	Description		Default
Channel 1 error	12	0	Error (manager mode)	At least one device is missing	
		1		Device type identification of at least one device failed	
		2		Vendor identification of at least one device failed	
		3		Product code verification of at least one device failed	
		4		Revision number verification of at least one device failed	
		5		Serial number verification of at least one device failed	
		6		Configuration via SDO of at least one device failed	
		7	Reserved		0
Channel 2 error ... Channel 8 error	13 ... 42		Reserved		0
Zeitstempel	43 ... 46		time stamp [µs] (32bit)		

1) You can find more information about this event in the u-mation configurator.

Module entry UR20-1COM-CANOPEN

Module entry	Inputs	Outputs	Remarks
UR20-1COM-CAN-16BYTE-INOUT	16 Byte	16 Byte	The module entries assume the preassignment of the "process data length" parameters (e.g. for PROFIBUS and PROFINET). The length of the header (2 bytes) must always be added. With e.g. PB-DP, MOD-TCP, CANopen, only 62 bytes of user data are transmitted.
UR20-1COM-CAN-24BYTE-INOUT	24 Byte	24 Byte	
UR20-1COM-CAN-32BYTE-INOUT	32 Byte	32 Byte	
UR20-1COM-CAN-48BYTE-INOUT	48 Byte	48 Byte	
UR20-1COM-CAN-64BYTE-INOUT	64 Byte	64 Byte	
UR20-1COM-CAN-126-BYTE-INOUT	126 Byte	126 Byte	not for Profibus-DP

Process data inputs UR20-1COM-CANOPEN

Byte	Bit	Name	Value	Tag	Remarks
0	0 ... 2	Command TX response	0	Idle	Mirrors Byte 0 Bit 0 ... 2 from the output process data. If an incorrect/invalid command occurs in the input process data, the telegram count is set to 0xF and the mirrored command in the output process data is not updated.
			1	Data send	
			2	Data clear	
			3	CANopen send	
			4	Node Control	
			5	-	
			6	-	
			7	Clear module data	
0	3	Module diagnosis	0	OK	Indicates an active diagnosis
			1	Error	
0	4 ... 6	Command RX response	0	Idle	Mirrors Byte 0 Bit 4 ... 6 from the output process data. If an incorrect/invalid command occurs in the input process data, the telegram count is set to 0xF and the mirrored command in the output process data is not updated.
			1	Data read	
			2	Data clear	
			3	CANopen read	
			4	Node State	
			5	-	
			6	-	
			7	Read buffer count	
0	7	Process data toggle bit	0	1	Mirrors the bit from the command from the process data output and indicates that the command has been processed. For the commands **CANopen send** and **CANopen read**, the toggle bit has no significance..
			1	0	
1	0 ... 3	Telegram count	0 ... 12 0xF		Number of attached telegrams. If no telegram is attached: 0. 0xF = error with incorrect/unsupported command in **Command TX response** or **Command RX response** or incorrect length of output process data.
1	4	RX Buffer not empty	0	no	Only in transparent mode and in listen only mode: Indicates that there is data in the receive buffer. All operation states: State of LED 3.1.
			1	yes	
1	5	RX Buffer full	0	no	Only in transparent mode and in listen only mode: Indicates that the receive buffer is completely filled. If telegrams in the receive buffer are not read out by the user, the next received telegram will be dropped and the diagnosis **Error Receiving failed** (Byte 11 Bit 5) will be triggered.
			1	yes	
1	6	TX Buffer not empty	0	no	Only in transparent mode and in listen only mode: Indicates that there is data in the transmit buffer. All operation states: State of LED 3.2.
			1	yes	
1	7	TX Buffer full	0	no	Only in transparent mode and in listen only mode: Indicates that the transmit buffer is completely filled. If telegrams in the transmit buffer are not sent out by the module, the next telegram the user tries to copy to the transmit buffer will be declined and the diagnosis **Error Transmission failed** (Byte 11 Bit 4) will be triggered.
			1	yes	
2 ... 127			0 ... 255		User data: The significance depends on Byte 0 Bit 4 ... 6.

Process data outputs UR20-1COM-CANOPEN

Byte	Bit	Name	Value	Tag	Remarks
0	0 ... 2	Command TX request	0	Idle	
			1	Data send	Saves the following data in the TX buffer: Bytes 2 ... 3: ID, Byte 4: RTR and Bytes 5 ... 12: data
			2	Data clear	Deletes all data in the TX buffer
			3	CANopen send	Updates the CANopen output process data (object dictionary: 0x2005)
			4	Node Control	Changes the NMT state of manager and/or device
			5	-	
			6	-	
			7	Clear module data	Deletes all data in the RX and TX buffers and restores all default values. Only the parameters are retained.
0	3		0	-	
			1	-	
0	4 ... 6	Command TX request	0	Idle	
			1	Data read	Reads the following data from the RX buffer: Bytes 2 ... 3: ID, Byte 4: RTR and Bytes 5 ... 12: data
			2	Data clear	Deletes all data in the RX buffer
			3	CANopen read	Updates the CANopen output process data (object dictionary:0x2105)
			4	Node State	Reads the NMT state of manager and/or device
			5	-	
			6	-	
			7	Read buffer count	Reads the count of RX queues and TX queues
0	7	Process data toggle bit	0	1	For the commands **CANopen send** and **CANopen read**, the toggle bit has no significance..
			1	0	
1	0 ... 3	Telegram count	0 ... 12	-	Number of attached telegrams. If no telegrams are attached: 0.
1	4		0	-	No function
			1	-	
1	5		0	-	No function
			1	-	
1	6		0	-	No function
			1	-	
1	7		0	-	No function
			1	-	
2 ... 127			0 ... 255		User data: The significance depends on Byte 0 Bit 0 ... 2.

Examplary assignment for manager mode and device mode

	B0					B1						B2		B3 ... B18	
Process data output / Process data input	Hex Result	not used	Commad RX	- / Module diagnosis	Commad TX	Hex Result	not used	not used / Red LED	not used	not used / Green LED	not used	not used	Bit 0 ... 1	not used	Bit 0 ... 1
Transfer mapped CANopen process data (Output and Input)															
Process data output	0x33	0	CANopen read	0	CANopen send	0x00	0	0	0	0	0	Process data output will be mapped at 0x2005 in CANopen object dictionary			
Process data input	0x33	0	CANopen read	0	CANopen send	0x10	0	0	0	1	0	Data from 0x1005 in CANopen object dictionary will be mapped to Process data input			
CANopen Node Control and Node State															
Process data output	0x44	0	Node State	0	Node Control	0x00	0	0	0	0	0	manager: 0	0 = No Change 1 = Re-Init 2 = Pre-Operational 3 = Operational	device 1 ... device 16: 0	0 = No Change 1 = Re-Init 2 = Pre-Operational 3 = Operational
Process data input	0x44	0	Node State	0	Node Control	0x10	0	0	0	1	0	manager: 0	0 = Undefined 1 = Not used 2 = Pre-Operational 3 = Operational	device 1 ... device 16: 0	0 = Undefined 1 = Not used 2 = Pre-Operational 3 = Operational

Examplary configuration for transparent mode and listen only mode[1)]

	Header											Telegram 1					Telegram 2					
	B0					B1						B2 ... B3				B4-B11	B12 ... B13				B14-B21	
Bit position		7	6-4	3	2-0		7	6	5	4	3-0		15-12	11	10-0			15-12	11	10-0		
Process data ...	Hex Result	Process data toggle bit	Commad RX	not used	Commad TX	Hex Result	not used	not used	not used	not used	Telegram count (0 ... 12; 0xF)	Hex Result	Length (DLC 0-8)	RTR (1 Bit)	CAN Identifier (11 Bit)	CAN data (0 ... 8 Byte)	Hex Result	Length (DLC 0-8,F)	RTR (1 Bit)	CAN Identifier (11 Bit)	CAN data (0 ... 8 Byte)	Description
Output																						
Input				Module diagnosis			TX buffer full	TX buffer not empty	RX buffer full	RX buffer not empty												
TX Data send																						
Output	0x81	0	Idle	0	Data send	0x02	0	0	0	0	2	0x8???	8	0 or 1	0x??, 0x??	0x?? ... 0x??	0x8???	8	0 or 1	0x??, 0x??	0x?? ... 0x??	Store CAN message in TX Buffer
Input	0x81	0	Idle	0	Data send	0x40	0	1	0	0	0	0x0000	0	-	-	-	0x0000	0	-	-	-	Start sending CAN TX message
Input	0x81	0	Idle	0	Data send	0x00	0	0	0	0	0	0x0000	0	-	-	-	0x0000	0	-	-	-	CAN TX message was sent
RX-Daten receive																						
Input	0x81	1	Idle	0	Data send	0x10	0	0	0	1	0	0x0000	0	0x00	0x00, 0x00	0x00 ... 0x00	0x0000	0	0x00	0x00, 0x00	0x00 ... 0x00	CAN message received
Output	0x10	0	Data read	0	Idle	0x00	0	0	0	0	0	0x0000	0	-	-	-	0x0000	0	-	-	-	Read RX CAN message from RX Buffer
Input	0x10	0	Data read	0	Idle	0x02	0	0	0	0	2	0x8???	8	0 or 1	0x??, 0x??	0x?? ... 0x??	0x8???	8	0 or 1	0x??, 0x??	0x?? ... 0x??	Get CAN RX message
RX Data receive multiple telegrams																						
Input	0x10	0	Data read	0	Idle	0x12	0	0	0	1	2	0x8000	8	-	-	-	0x8000	8	-	-	-	CAN messages received
Output	0x90	1	Data read	0	Idle	0x00	0	0	0	0	0	0x0000	0	-	-	-	0x0000	0	-	-	-	Read CAN RX message from RX Buffer
Input	0x90	1	Data read	0	Idle	0x12	0	0	0	1	2	0x8???	8	0 or 1	0x??, 0x??	0x?? ... 0x??	0x8???	8	0 or 1	0x??, 0x??	0x?? ... 0x??	Get CAN RX message data, RX Buffer still contains data
Output	0x10	0	Data read	0	Idle	0x00	0	0	0	0	0	0x0000	0	-	-	-	0x0000	0	-	-	-	Read CAN RX message from RX Buffer
Input	0x10	0	Data read	0	Idle	0x02	0	0	0	0	2	0x8???	8	0 or 1	0x??, 0x??	0x?? ... 0x??	0x8???	8	0 or 1	0x??, 0x??	0x?? ... 0x??	Get CAN RX message data / RX Buffer is now empty
TX Data send and RX Data receive																						
Input	0x10	0	Data read	0	Idle	0x12	0	0	0	1	2	–	0x8000	8	-	-	0x8000	8	-	-	-	CAN messages received
Output	0x91	1	Data read	0	Data send	0x02	0	0	0	0	2	0x??, 0x??[1)]	0x8???	8	0 or 1	0x??, 0x??	0x8???	8	0 or 1	0x??, 0x??	0x?? ... 0x??	Store CAN TX message in TX Buffer and read CAN RX message from RX Buffer
Input	0x91	1	Data read	0	Data send	0x52	0	1	0	1	2	0x??, 0x??[1)]	0x8???	8	0 or 1	0x??, 0x??	0x8???	8	0 or 1	0x??, 0x??	0x?? ... 0x??	Get CAN RX message data and start sending CAN TX message
Output	0x10	0	Data read	0	Idle	0x00	0	0	0	0	0	–	0x0000	0	-	-	0x0000	0	-	-	-	Read RX CAN message from RX Buffer
Input	0x90	0	Data read	0	Idle	0x02	0	0	0	0	2	0x??, 0x??[1)]	0x8???	8	0 or 1	0x??, 0x??	0x8???	8	0 or 1	0x??, 0x??	0x?? ... 0x??	Get CAN RX message data / RX Buffer is now empty

1) The question marks have to be replaced with concrete values depending on the application.

Examplary configuration for transparent mode and listen only mode[1)]

	B0					B1						B2	B3	B4	B4 ... B128	
Process data	Hex Result	Process data toggle bit	Command RX	not used	Command TX	Hex Result	not used	not used	not used	not used		RX Buffer count	TX Buffer count	not used	not used	Description
Process data				Module diagnosis			TX Buffer full	TX Buffer not empty	RX Buffer full	RX Buffer not empty	Telegram count (0 ... 12; 0xF)					
Get Buffer fill information																
Output	0xF0	1	Read Count	0	Idle	0x00	0	0	0	0	0	–	–	–	–	Read buffer fill state
Input	0xF0	1	Read Count	0	Idle	0x00	0	0	0	0	0	0x??[1)]	0x??[1)]	–	–	Get buffer fill state

1) The question marks have to be replaced with concrete values depending on the application.

6.85 Communication module UR20-1COM-CAN

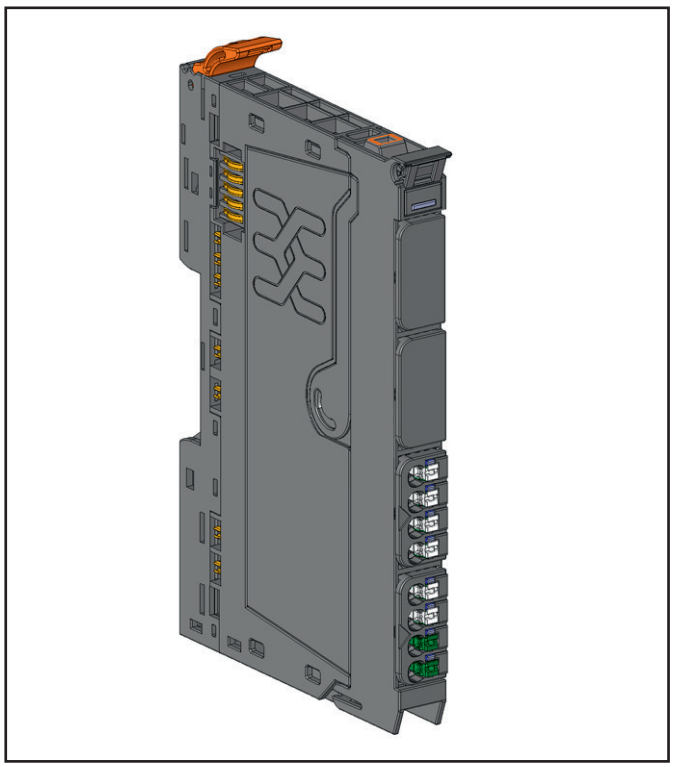

Communication module UR20-1COM-CAN (Item No. 3040800000)

The UR20-1COM-CAN communication module enables the connection of CAN-capable devices with a u-remote station. Both the standard format with 11-bit identifier (CAN specification 2.0, part A) and the extended format with 29-bit identifier (CAN specification 2.0, part B) are supported. The number of UR20-1COM-CAN modules that can be installed in a u-remote station depends on the maximum process data size of the fieldbus coupler used. The module has a galvanic isolated CAN interface and can work in the following operating modes:

- transparent
- listen only

The desired operating mode can be parameterised in the web server or via the higher-level fieldbus of the UR20-coupler.
The module supports baud rates from 10 kbit/s to 1 Mbit/s, see table “Cable length depnding on the baud rate”. The selected baud rate must also be set in all devices to be connected. If the UR20-1COM-CAN module is placed at the beginning or at the end of the CAN bus, an integrated termination resistor can be parameterised in the web server.

Transparent mode and listen only mode

In transparent mode and in listen only mode, the UR20-1COM-CAN module operates according to ISO 11898-1, either as a CAN frame gateway or as a CAN interface between the coupler’s higher-level fieldbus and the lower-level CAN bus on the UR20-1COM-CAN module. The communication status is indicated by two LEDs.
In **transparent mode**, the UR20-1COM-CAN module works as an active node in the CAN network and can transmit and receive.
In **listen only mode**, the module works as a passive node and can only receive. In order to restrict the reception of CAN messages, 4 filter banks with configurable CAN identifiers and masks are available.

Signalling and connection

In transparent mode and in listen only mode, the LEDs indicate the status of the transmit buffer and the receive buffer.
The CAN bus is connected to connector 3 of the module.
The ground connection of the CAN bus cable and the shield are connected to connector 4 of the module.

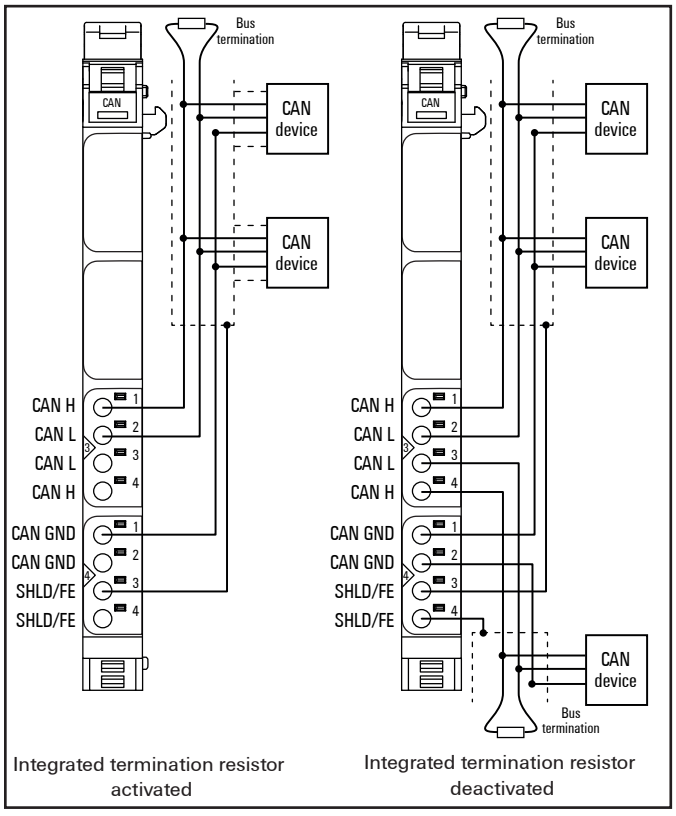

Connection diagram UR20-1COM-CAN independent of operating mode

The CAN devices have to be connected using shielded fieldbus cables! Shielding has to be designed as described in the chapter “Earthing and Shielding”.



	Module status LED Green: Communication over the system bus Red: Error
3.1	**Green:** There is RX data in the buffer **Off:** There is no RX data in the buffer
3.2	**Red**: There is TX data in the buffer **Off:** There is no TX data in the buffer

LED indicators UR20-1COM-CAN, troubleshooting see Chapter 12

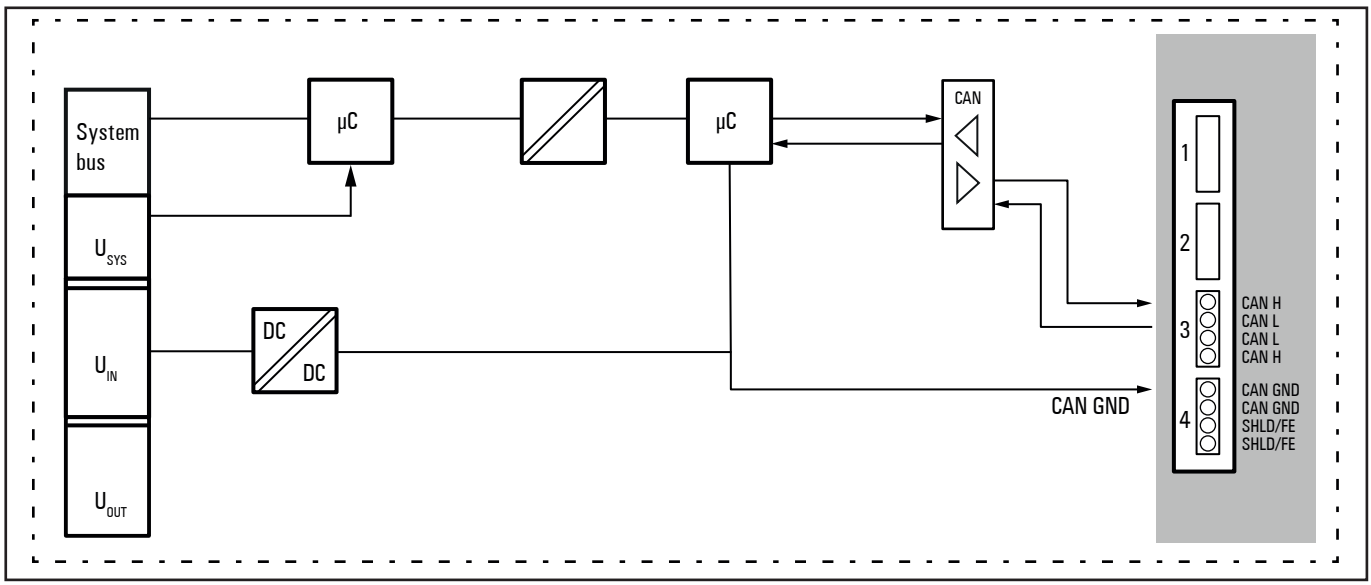

Block diagram UR20-1COM-CAN

Technical data UR20-1COM-CAN (Item No. 3040800000)

System data	
Data	Process, parameter and diagnostic data depend on the coupler used, see the coupler description.
Interface	u-remote system bus
System bus transfer rate	48 Mbps / 192 Mbps
CAN interface	
Number	1
Type	1x CAN, parametrisable
Connection	CAN according to ISO 11898-1
Transfer rate	10 / 20 / 50 / 100 / 125 / 250 / 500 / 800 / 1000 kBit/s
Receive buffer	36 telegrams
Transmit buffer	40 telegrams
CAN identifier	11 / 29 Bit
Terminating resistor sub-bus	120 Ω, parameterisable
Module diagnosis	yes
Individual channel diagnosis	yes
Supply	
Supply voltage	24 V DC +20 %/-15 %, over the system bus
Current consumption from input current path I_{SYS}	8 mA
Current consumption from input current path I_{IN}	30 mA
General data	
Weight (operational status)	88 g
For additional general data, see Section 3.4	

Overview of the editable parameters UR20-1COM-CAN

Channel	Description	Options	Default
0	Process data length inputs	3 ... 122 Byte	15
0	Process data length outputs	3 ... 122 Byte	15
0	Operation mode	disabled (0) / listen only (1) / transparent (2)	disabled
0	Identifier	11 (0) / 29 (1)	11 (0)
0	Baud rate in kBit/s	1000 (0) / 800 (1) / 500 (2) / 250 (3) / 125 (4) / 100 (5) / 50 (6) / 20 (7) / 10 (8)	250 (3)
0	CAN bus termination	enabled (0) / disabled (1)	disabled
	RX Filter 1 ... 4	enabled (0) / disabled (1)	disabled
0	RX CAN ID 1 ... 4	0 ... 536870911	0
	RX Maske 1 ... 4	0 ... 536870911	536870911

Cable length depending on the baud rate

Baud rate	Cable length
10 kbit/s	5000 m
20 kbit/s	2500 m
50 kbit/s	1000 m
100 kbit/s	625 m
125 kbit/s	500 m
250 kbit/s	250 m
500 kbit/s	100 m
800 kbit/s	50 m
1 Mbit/s	25 m

Diagnostic data UR20-1COM-CAN

Name	Byte	Bit	Description		Default
Error indicator	0	0	Module error		
		1	Internal error		
		2	External error		
		3	Channel error		
		4	Error		
		5	Power supply fault		
		6	Reserved		0
		7	Parameter error		
Module type	1	0	Module Type 0x08		0
		1			0
		2			0
		3			1
		4	Channel information available		1
		5	Reserved		0
		6	Reserved		0
		7	Reserved		0
Error byte 2	2	0 ... 7	Reserved		0
Error byte 3	3	0 ... 2	Reserved		0
		3	Internal diagnostic FIFO full		0
		4	Communication fault		
		5	Reserved		0
		6	Reserved		0
		7	Reserved		0
Channel type	4	0	Channel type 0x7E		0
		1			1
		2			1
		3			1
		4			1
		5			1
		6			1
		7	Reserved		0
Diagnostic bits per channel	5		Number of diagnostic bits per channel		32
Number of channels	6		Number of similar channels per module		1
Channel error	7	0	Error at channel 0		0
		1 ... 7	Reserved		0
Channel error	8 ... 10	0 ... 31	Reserved		0
Channel 0 error	11	0	General error	CAN passive	
		1		CAN bus-off	
		2		CAN-Stack initialisation failed	
		3		Buffer overflow	
		4	Error	Transmission failed	
		5		Receiving failed	
		6 ... 7	Reserved		0
Channel 1 error ... Channel 31 error	12 ... 42		Reserved		0
Time stamp	43 ... 46		time stamp [µs] (32bit)		

1) You can find more information about this event in the u-mation configurator.

Module entries UR20-1COM-CAN

Module entry	Inputs	Outputs	Remarks
UR20-1COM-CAN-16BYTE-INOUT	16 Byte	16 Byte	The module entries assume the preassignment of the "process data length" parameters (e.g. for PROFIBUS and PROFINET). The length of the header (2 bytes) must always be added. With e.g. PB-DP, MOD-TCP, CANopen, only 62 bytes of user data are transmitted.
UR20-1COM-CAN-24BYTE-INOUT	24 Byte	24 Byte	
UR20-1COM-CAN-32BYTE-INOUT	32 Byte	32 Byte	
UR20-1COM-CAN-48BYTE-INOUT	48 Byte	48 Byte	
UR20-1COM-CAN-64BYTE-INOUT	64 Byte	64 Byte	
UR20-1COM-CAN-126-BYTE-INOUT	126 Byte	126 Byte	not for Profibus-DP

Process data inputs UR20-1COM-CAN

Byte	Bit	Name	Value	Tag	Remarks
0	0 ... 2	Command TX response	0	Idle	Mirrors Byte 0 Bit 0 ... 2 from the output process data. If an incorrect or invalid command occurs in the output process data, the telegram count is set to 0xF and the mirrored command in the input process data is not updated.
			1	Data send	
			2	Data clear	
			3	-	
			4	-	
			5	-	
			6	-	
			7	Reset modules	
0	3	Module diagnosis	0	OK	Indicates an active diagnosis
			1	Error	
0	4 ... 6	Command RX response	0	Idle	Mirrors Byte 0 Bit 4 ... 6 from the output process data.
			1	Data read	
			2	Data clear	
			3	-	
			4	-	
			5	-	
			6	-	
			7	Read buffer count	
0	7	Process data toggle bit	0	1	Mirrors Byte 0 Bit 7 from the output process data as confirmation that the command has been processed.
			1	0	
1	0 ... 3	Telegram count	0 ... 12 0xF		Number of attached telegrams (only with command "Send data"). 0xF = error with incorrect or unsupported command in **Command TX response** or **Command RX response** or incorrect length of output process data.
1	4	RX Buffer not empty	0	no	Indicates that there is data in the receive buffer. State of LED 3.1.
			1	yes	
1	5	RX Buffer full	0	no	Indicates that the receive buffer is nearly filled.
			1	yes	
1	6	TX Buffer not empty	0	no	Indicates that there is data in the transmit buffer. State of LED 3.2.
			1	yes	
1	7	TX Buffer full	0	no	Indicates that the transmit buffer is nearly filled.
			1	yes	
2 ... 121			0 ... 255		User data: The meaning depends on Byte 0 Bit 4 ... 6.

Process data outputs UR20-1COM-CAN

Byte	Bit	Name	Value	Tag	Remarks
0	0 ... 2	Command TX request	0	Idle	
			1	Data send	Saves the following data in the TX buffer: Bytes 2 ... 3: ID, Byte 4: RTR and Bytes 5 ... 12: data
			2	Data clear	Deletes all data in the TX buffer
			3	-	
			4	-	
			5	-	
			6	-	
			7	Reset modules	Deletes all data in the RX and TX buffers and restores all default values. Only the parameters are retained.
0	3		0	-	
			1	-	
0	4 ... 6	Command TX request	0	Idle	
			1	Data read	Reads the following data from the RX buffer: Bytes 2 ... 3: ID, Byte 4: RTR and Bytes 5 ... 12: data
			2	Data clear	Deletes all data in the RX buffer
			3	-	
			4	-	
			5	-	
			6	-	
			7	Read buffer count	Reads the count of RX queues and TX queues
0	7	Process data toggle bit	0	1	
			1	0	
1	0 ... 3	Telegram count	0 ... 12	-	Number of attached telegrams. Only for “Data send”, otherwise: 0.
1	4		0	-	No function
			1	-	
1	5		0	-	No function
			1	-	
1	6		0	-	No function
			1	-	
1	7		0	-	No function
			1	-	
2 ... 121			0 ... 255		User data. Only for “Data send”

Examplary configuration of process data for 11 bit mode[1)]

	Header											Telegramm 1					Telegramm 2					
	B0					B1						B2 -B3				B4-B11	B12-B13				B14-B21	
Bit position		7	6-4	3	2-0		7	6	5	4	3-0		15-12	11	10-0			15-12	11	10-0		
Process data ...																						
Output	Hex Result	Process data toggle bit	Commad RX	not used	Commad TX	Hex Result	not used	not used	not used	not used	Telegram count (0x00 - 0xDA or 0xDF)	Hex Result	Length (DLC 0-8, 4 Bit)	RTR (1 Bit)	CAN Identifier (11 Bit)	CAN data (8 Byte)	Hex Result	Length (DLC 0-8, 4 Bit)	RTR (1 Bit)	CAN Identifier (11 Bit)	CAN data (8 Byte)	Description
Input				Module diagnosis			TX buffer full	TX buffer not empty	RX buffer full	RX buffer not empty												
TX Data send																						
Output	0x81	0	Idle	0	Data send	0x02	0	0	0	0	2	0x8???	8	0 or 1	0x??, 0x??	0x?? ... 0x??	0x8???	8	0 or 1	0x??, 0x??	0x?? ... 0x??	Store CAN message in TX Buffer
Input	0x81	0	Idle	0	Data send	0x40	0	1	0	0	0	0x0000	0	-	-	-	0x0000	0	-	-	-	Start sending CAN TX message
Input	0x81	0	Idle	0	Data send	0x00	0	0	0	0	0	0x0000	0	-	-	-	0x0000	0	-	-	-	CAN TX message was sent
RX-Data receive																						
Input	0x81	1	Idle	0	Data send	0x10	0	0	0	1	0	0x0000	0	0x00	0x00, 0x00	0x00 ... 0x00	0x0000	0	0x00	0x00, 0x00	0x00 ... 0x00	CAN message received
Output	0x10	0	Data read	0	Idle	0x10	0	0	0	1	0	0x0000	0	-	-	-	0x0000	0	-	-	-	Read RX CAN message from RX Buffer
Input	0x10	0	Data read	0	Idle	0x02	0	0	0	0	2	0x8???	8	0 or 1	0x??, 0x??	0x?? ... 0x??	0x8???	8	0 or 1	0x??, 0x??	0x?? ... 0x??	Get CAN RX message
RX Data receive multiple telegrams																						
Input	0x10	0	Data read	0	Idle	0x12	0	0	0	1	2	0x8000	8	-	-	-	0x8000	8	-	-	-	CAN messages received
Output	0x90	1	Data read	0	Idle	0x10	0	0	0	1	0	0x0000	0	-	-	-	0x0000	0	-	-	-	Read CAN RX message from RX Buffer
Input	0x90	1	Data read	0	Idle	0x12	0	0	0	1	2	0x8???	8	0 or 1	0x??, 0x??	0x?? ... 0x??	0x8???	8	0 or 1	0x??, 0x??	0x?? ... 0x??	Get CAN RX message data, RX Buffer still contains data
Output	0x10	0	Data read	0	Idle	0x10	0	0	0	1	0	0x0000	0	-	-	-	0x0000	0	-	-	-	Read CAN RX message from RX Buffer
Input	0x10	0	Data read	0	Idle	0x02	0	0	0	0	2	0x8???	8	0 or 1	0x??, 0x??	0x?? ... 0x??	0x8???	8	0 or 1	0x??, 0x??	0x?? ... 0x??	Get CAN RX message data / RX Buffer is now empty
TX Data send and RX Data receive																						
Input	0x10	0	Data read	0	Idle	0x12	0	0	0	1	2	–	0x8000	8	-	-	0x8000	8	-	-	-	CAN messages received
Output	0x91	1	Data read	0	Data send	0x12	0	0	0	1	2	0x??, 0x??[1)]	0x8???	8	0 or 1	0x??, 0x??	0x8???	8	0 or 1	0x??, 0x??	0x?? ... 0x??	Store CAN TX message in TX Buffer and read CAN RX message from RX Buffer
Input	0x91	1	Data read	0	Data send	0x52	0	1	0	1	2	0x??, 0x??[1)]	0x8???	8	0 or 1	0x??, 0x??	0x8???	8	0 or 1	0x??, 0x??	0x?? ... 0x??	Get CAN RX message data and start sending CAN TX message
Output	0x10	0	Data read	0	Idle	0x10	0	0	0	1	0	–	0x0000	0	-	-	0x0000	0	-	-	-	Read RX CAN message from RX Buffer
Input	0x90	0	Data read	0	Idle	0x02	0	0	0	0	2	0x??, 0x??[1)]	0x8???	8	0 or 1	0x??, 0x??	0x8???	8	0 or 1	0x??, 0x??	0x?? ... 0x??	Get CAN RX message data / RX Buffer is now empty

1) The question marks have to be replaced with concrete values depending on the application.

Examplary configuration of process data for 29 bit mode[1)]

	Header											Telegramm 1					Telegramm 2					
	B0					B1						B2			B3-B6	B7-B14	B15			B16-B19	B20-B27	
Bit position		7	6-4	3	2-0		7	6	5	4	3-0		4-7	0	29-0			4-7	0	10-0		
Process data ...																						
Output	Hex Result	Process data toggle bit	Commad RX	not used	Commad TX	Hex Result	not used	not used	not used	not used	Telegram count (0x00 - 0xDA or 0x0F)	Hex Result	Length (DLC 0-8, 4 Bit)	RTR (1 Bit)	CAN Identifier (29 Bit)	CAN data (8 Byte)	Hex Result	Length (DLC 0-8, 4 Bit)	RTR (1 Bit)	CAN Identifier (29 Bit)	CAN data (8 Byte)	Description
Input				Module diagnosis			TX buffer full	TX buffer not empty	RX buffer full	RX buffer not empty												
TX-Data send																						
Output	0x81	0	Idle	0	Data send	0x02	0	0	0	0	2	0x8?..?	8	0 or 1	0x?? ... 0x??	0x?? ... 0x??	0x8?..?	8	0 or 1	0x?? ... 0x??	0x?? ... 0x??	Store CAN message in TX Buffer
Input	0x81	0	Idle	0	Data send	0x40	0	1	0	0	0	0x00...0	0	0	0x00 ... 0x00	0x00 ... 0x00	0x00...0	0	0	0x00 ... 0x00	0x00 ... 0x00	Start sending CAN TX message
Input	0x81	0	Idle	0	Data send	0x00	0	0	0	0	0	0x00...0	0	0	0x00 ... 0x00	0x00 ... 0x00	0x00...0	0	0	0x00 ... 0x00	0x00 ... 0x00	CAN TX message was sent
RX-Data receive																						
Input	0x81	1	Idle	0	Data send	0x10	0	0	0	1	0	0x00...0	0	0x00	0x00 ... 0x00	0x00 ... 0x00	0x00...0	0	0x00	0x00, 0x00	0x00 ... 0x00	CAN message received
Output	0x10	0	Data read	0	Idle	0x00	0	0	0	0	0	0x0?...?	0	-	-	-	0x0?...?	0	-	-	-	Read RX CAN message from RX Buffer
Input	0x10	0	Data read	0	Idle	0x01	0	0	0	0	1	0x8?..?	8	0 or 1	0x?? ... 0x??	0x?? ... 0x??	0x00..0	0	0	0x00 ... 0x00	0x00 ... 0x00	Get CAN RX message
RX Data receive multiple telegrams																						
Input	0x10	0	Data read	0	Idle	0x11	0	0	0	1	1	0x80...0	8	0 or 1	0x?? ... 0x??	0x?? ... 0x??	0x00...0	0	0	0x00 ... 0x00	0x00 ... 0x00	CAN messages received
Output	0x90	1	Data read	0	Idle	0x00	0	0	0	0	0	0x00...0	0	-	-	-	0x00...0	0	-	-	-	Read CAN RX message from RX Buffer
Input	0x90	1	Data read	0	Idle	0x12	0	0	0	1	2	0x8?..?	8	0 or 1	0x?? ... 0x??	0x?? ... 0x??	0x8?..?	8	0 or 1	0x?? ... 0x??	0x?? ... 0x??	Get CAN RX message data, RX Buffer still contains data
Output	0x10	0	Data read	0	Idle	0x00	0	0	0	0	0	0x00...0	0	-	-	-	0x00...0	0	-	-	-	Read CAN RX message from RX Buffer
Input	0x10	0	Data read	0	Idle	0x02	0	0	0	0	2	0x8?..?	8	0 or 1	0x?? ... 0x??	0x?? ... 0x??	0x8?..?	8	0 or 1	0x?? ... 0x??	0x?? ... 0x??	Get CAN RX message data / RX Buffer is now empty
TX Data send and RX Data receive																						
Input	0x10	0	Data read	0	Idle	0x12	0	0	0	1	2	0x80...0	8	-	-	-	0x80...0	8	-	-	-	CAN messages received
Output	0x91	1	Data read	0	Data send	0x02	0	0	0	0	2	0x8?..?	8	0 or 1	0x?? ... 0x??	0x?? ... 0x??	0x8?..?	8	0 or 1	0x?? ... 0x??	0x?? ... 0x??	Store CAN TX message in TX Buffer and read CAN RX message from RX Buffer
Input	0x91	1	Data read	0	Data send	0x52	0	1	0	1	2	0x8?..?	8	0 or 1	0x?? ... 0x??	0x?? ... 0x??	0x8?..?	8	0 or 1	0x?? ... 0x??	0x?? ... 0x??	Get CAN RX message data and start sending CAN TX message
Output	0x10	0	Data read	0	Idle	0x00	0	0	0	0	0	0x00...0	0	-	-	-	0x00...0	0	-	-	-	Read RX CAN message from RX Buffer
Input	0x90	0	Data read	0	Idle	0x02	0	0	0	0	2	0x8?..?	8	0 or 1	0x?? ... 0x??	0x?? ... 0x??	0x8?..?	8	0 or 1	0x?? ... 0x??	0x?? ... 0x??	Get CAN RX message data / RX Buffer is now empty

1) The question marks have to be replaced with concrete values depending on the application.

Examplary configuration of process data for 11 bit mode and 29 bit mode[1)]

Prozessdaten	B0					B1						B2	B3	B4 ... B128	
Output	Hex Result	Process data toggle bit	Commad RX	not used	Commad TX	Hex Result	not used	not used	not used	not used		RX Buffer count	TX Buffer count	not used	Description
Input				Module diagnosis			TX buffer full	TX buffer not empty	RX buffer full	RX buffer not empty	Telegram count (0 ... 12; 0xF)				
Get buffer fill information															
Output	0xF0	1	Read buffer count	0	Idle	0x00	0	0	0	0	0	–	–	–	Read buffer fill state
Input	0xF0	1	Read buffer count	0	Idle	0x00	0	0	0	0	0	0x??[1)]	0x??[1)]	–	Receive buffer fill state

1) The question marks have to be replaced with concrete values depending on the application.

6.86 Communication module UR20-4COM-IO-LINK

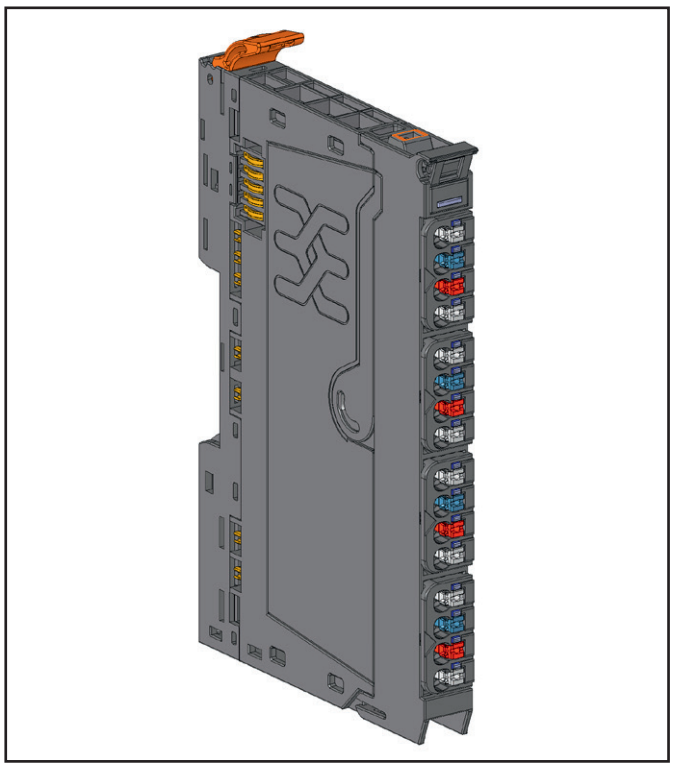

Digital communication module UR20-4COM-IO-LINK (Item No. 1315740000)

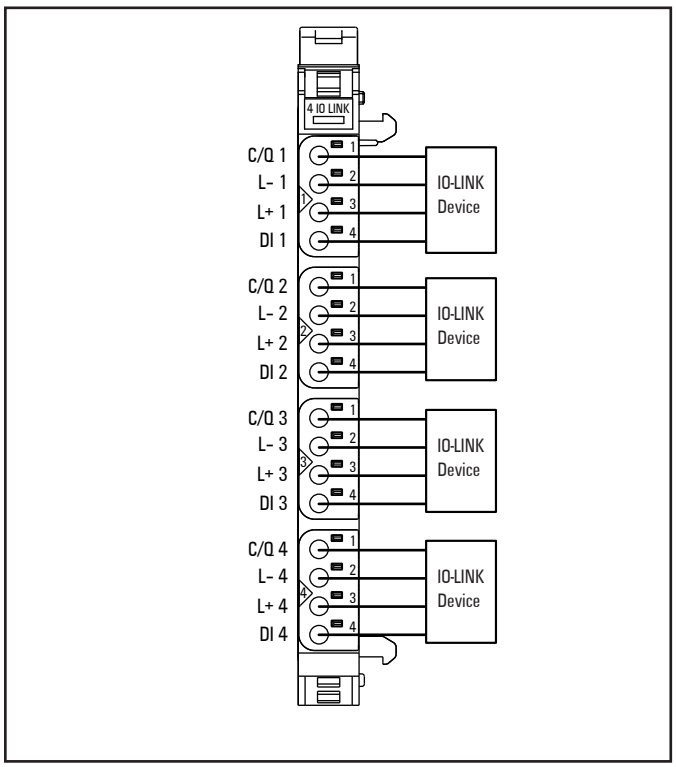

Connection diagram UR20-4COM-IO-LINK

The UR20-4COM-IO-LINK communication module is an IO-Link master according to the IO-Link specification V1.1.2. One IO-Link device can be connected to each connector. The IO-Link devices must conform to port class A. Port class B is also possible if additionally potential distribution modules are used. One digital input can be used additionally with each connector.
Process data are exchanged with the connected IO-Link device via each IO-Link port. Additionally acyclic data can be exchanged over here (diagnostic data, parameter data, status information data). The parameter data of the connected IO-Link devices can be stored in the master module, where they are managed by a parameterising server (data-storage). Thereby it is very comfortable to change the IO-Link master or a single IO-Link device (from IO-Link specification V1.1 on).
The four communication channels can be use as digital inputs or outputs together with standard field devices.
A status LED is assigned to each channel. The module electronics supply the connected devices with power from the input current path (I_{IN}).
The inputs are protected against voltage surges and overcurrent. Voltages that exceed ±30 V may cause the destruction of the module.

ATTENTION

The module can be destroyed!
The voltage between C/Q and L- must not exceed the voltage between L+ and L-.
► If the connected I/O-Link device uses the C/Q input you have to support the I/O-Link device via L+ and L- on the same plug only.

A maximum of 3 of the following module types may be installed in a u-remote station, either of the same type or mixed:
– UR20-1COM-SAI-PRO
– UR20-4COM-IO-LINK

Detailed information about the UR20-IO-Link module can be found in the **Communication module UR20-4COM-IO-LINK** manual.
The manual can be downloaded from the Weidmüller website.

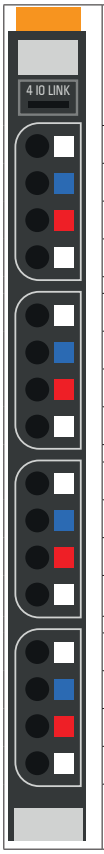

	Module status LED Green: Communication on system bus Red: Error
1.1	Yellow: Status COM 1
1.2	Red: Error IO-Link port 1
1.4	Yellow: Status DI 1
2.1	Yellow: Status COM 2
2.2	Red: Error IO-Link port 2
2.4	Yellow: Status DI 2
3.1	Yellow: Status COM 3
3.2	Red: Error IO-Link port 3
3.4	Yellow: Status DI 3
4.1	Yellow: Status COM 4
4.2	Red: Error IO-Link port 4
4.4	Yellow: Status DI 4

LED indicators UR20-4COM-IO-LINK, troubleshooting see Chapter 12

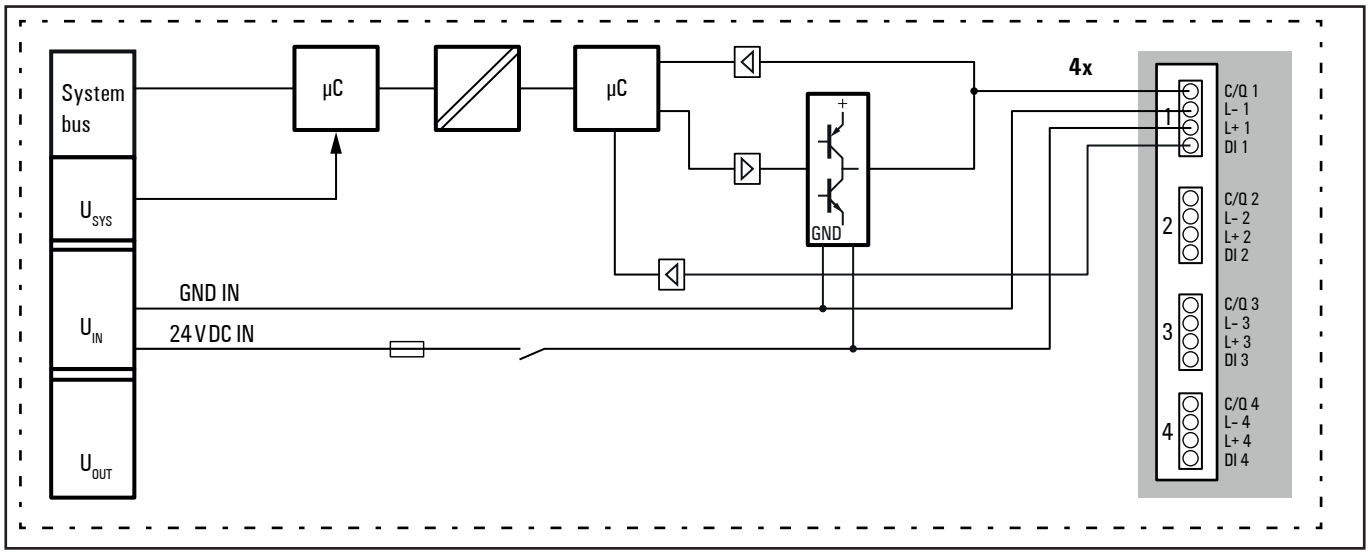

Block diagram UR20-4COM-IO-LINK

Technical data UR20-4COM-IO-LINK (Item No. 1315740000)

System data	
Data	Process, parameter and diagnostic data depend on the coupler used, see coupler description
Interface	u-remote system bus
System bus transfer rate	48 Mbps
Digital inputs	
Number	4
Sensor types	Type 1 and Type 3 as per IEC 61131-2
Low input voltage	< 5 V
High input voltage	> 11 V
IO-Link interfaces	
Number	4
Type	IO-Link as per IEC 61131-9
Transfer rate	4.8 kBaud / 38.4 kBaud / 230.4 kBaud, depending on the connected IO-Link device
Output current C/Q (in DO mode)	0.1 A
Input type C/Q (in DI mode)	Type 1 and Type 3 acc. IEC 61131-2
Output current L+	0.5 A per channel, total max. 2 A
Line break detection	yes
Short-circuit-proof	yes
Module diagnosis	yes
Individual channel diagnosis	yes
Supply	
Supply voltage	24 V DC +20%/-15%
Current consumption from system current path I_{SYS}	8 mA
Current consumption from input current path I_{IN}	25 mA + sensor supply
General data	
Weight (operational status)	88 g
For additional general data see Section 3.4	

1) If C/Q is used as digital input, the connected device shall only be supplied via the L+ and L- connections of the respective channel.

Overview of the editable parameter UR20-4COM-IO-LINK

Channel	Description	Options	Default
0 ... 3	Operating mode	disabled (0) / DO (1) / DI (2) / IO-Link (3)	disabled
0 ... 3	Port cycle	Free running (0) / Fixed cycle (1) / Message sync (2)	Free running
0 ... 3	Port cycle time [n x 0.1 ms]	4 ... 1326	4
0 ... 3	IO-Link device check	disabled (0) / Type compare (1) / Identical (2)	disabled
0 ... 3	DS activation state	disabled (0) / enabled (1) / Clear (2)	disabled
0 ... 3	Channel diagnostics	disabled (0) / enabled (1)	disabled
0 ... 3	Process data length input	0 Byte (0) / 1 Byte (1) / 2 Byte (2) / ... / 32 Byte (32) / auto (33)	auto
0 ... 3	Process data length output	0 Byte (0) / 1 Byte (1) / 2 Byte (2) / ... / 32 Byte (32) / auto (33)	auto

1) Values in brackets for Modbus-TCP (firmware version 02.00.00), CANopen, EtherCAT and EtherNet/IP via class module parameters

Diagnostic data UR20-4COM-IO-LINK

Name	Byte	Bit	Description	Default
Error indicator	0	0	Module error	0
		1	Internal Error	0
		2	External error	0
		3	Channel error	0
		4	Error	0
		5	Power supply fault	0
		6	Reserved	0
		7	Parameter error	0
Module type	1	0	Module Type 0x05	
		1		
		2		
		3		
		4	Reserved	1
		5	Reserved	0
		6	Reserved	0
		7	Reserved	0
Error byte 2	2	0	IO-Link Event in Queue	0
		1 ... 7	Reserved	
Error byte 3	3	0 ... 2	Reserved	0
		3	Diagnostic Alarm Lost	0
		4	Communication fault	0
		5	Reserved	0
		6	Reserved	0
		7	Reserved	0
Channel type	4	0	Channel type	1
		1		1
		2		0
		3		1
		4		1
		5		1
		6		1
		7	Reserved	0
Diagnostic bits per channel	5		Number of diagnostic bit per channel	16
Number of channels	6		Number of similar channels per module	4
Channel error	7	0	Error at channel 0	0
		1	Error at channel 1	0
		2	Error at channel 2	0
		3	Error at channel 3	0
		4 ... 7	Reserved	0
	8 ... 10	8 ... 31	Reserved	0

Diagnostic data UR20-4COM-IO-LINK

Name	Byte	Bit	Description	Default
Error channel 0 Error channel 1 Error channel 2 Error channel 3	11 13 15 17	0	Short Circuit	0
		1	Undervoltage	0
		2	Overvoltage	0
		3	Overload	0
		4	Overtemperature	0
		5	Line Break	0
		6	Upper Limit Value	
		7	Lower Limit Value	0
Error channel 0 Error channel 1 Error channel 2 Error channel 3	12 14 16 18	0	Error	0
		1	Parameter fault	0
		2	Powersupply fault	0
		3	Fuse blown	0
		4	Communication fault	0
		5	Error 1	0
		6	Unknown Error	
		7	Unknown Error 2	0
Error channel 4 ... Error channel 15	19 ... 42	0 ... 7	Reserved	0
Time stamp	43-46		time stamp [µs] (32bit)	

Process data inputs UR20-4COM-IO-LINK

Byte	Bit	Description
IB0	IX0.0	DI 1
	IX0.1	DI 2
	IX0.2	DI 3
	IX0.3	DI 4
	IX0.4	C/Q 1
	IX0.5	C/Q 2
	IX0.6	C/Q 3
	IX0.7	C/Q 4
IB1	IX1.0	Process data IN valid IO-Link-Port 1
	IX1.1	Process data IN valid IO-Link-Port 2
	IX1.2	Process data IN valid IO-Link-Port 3
	IX1.3	Process data IN valid IO-Link-Port 4
	IX1.4	Error IO-Link-Port 1
	IX1.5	Error IO-Link-Port 2
	IX1.6	Error IO-Link-Port 3
	IX1.7	Error IO-Link-Port 4
IB2 ...		Process data of the IO-Link device[1)]

1) The process data of the IO-Link device depend on which module has been chosen from the device description file. The mapping of the IO-Link devices depends on the length of their process data and the parameter settings.

Process data outputs UR20-4COM-IO-LINK

Byte	Bit	Description
OB0	OX0.0	DO 1
	OX0.1	DO 2
	OX0.2	DO 3
	OX0.3	DO 4
	OX0.4	reserved
	OX0.5	reserved
	OX0.6	reserved
	OX0.7	reserved
OB1	OX1.0	Process data OUT valid IO-Link-Port 1
	OX1.1	Process data OUT valid IO-Link-Port 2
	OX1.2	Process data OUT valid IO-Link-Port 3
	OX1.3	Process data OUT valid IO-Link-Port 4
	OX1.4	reserved
	OX1.5	reserved
	OX1.6	reserved
	OX1.7	reserved
OB2 ...		Process data of the IO-Link device[1)]

1) The process data of the IO-Link device depend on which module has been chosen from the device description file. The mapping of the IO-Link devices depends on the length of their process data and the parameter settings.

The cyclic IO-Link process data is sent in any case. Using the bits **Process data OUT valid ...**, commands can be sent, that instruct the respective device how it should respond to this:

FALSE: (DeviceOperate) The cyclic process output data of the master are invalid or not yet present. The device waits for the MasterCommand „ProcessDataOutputOperate“, before it changes to regular operation. In this status, the cyclic process input data are already transmitted from the device to the master, which is indicated via the bits **Processdata IN valid ...** in IB1.

TRUE: (ProcessDataOutputOperate) The cyclic process output data are valid. The device should change to regular operation and respond to the process output data.

6.87 Communication module UR20-4COM-IO-LINK-V2

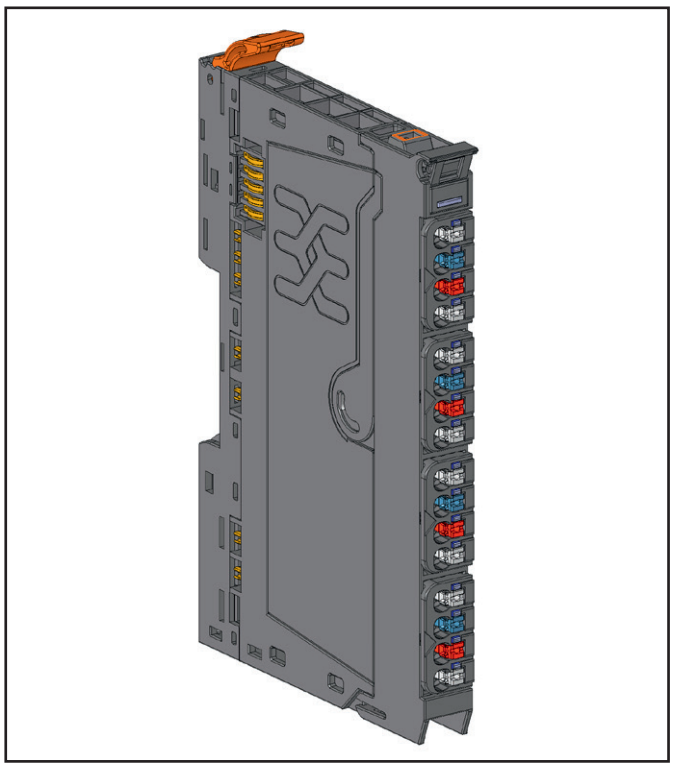

Digital communication module UR20-4COM-IO-LINK-V2 (Item No. 2819690000)

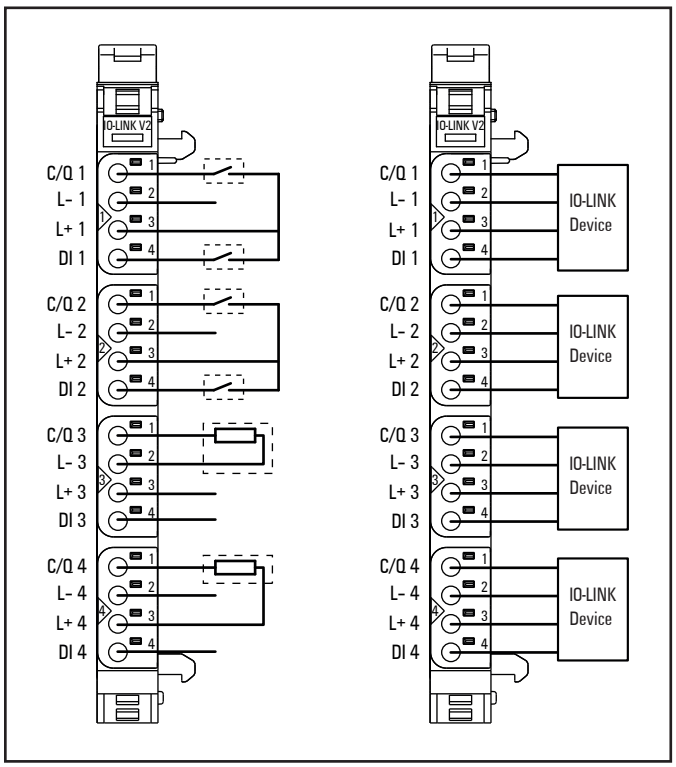

Connection diagram UR20-4COM-IO-LINK-V2

The UR20-4COM-IO-LINK-V2 communication module is an IO-Link master according to the IO-Link specification V1.1.4. One IO-Link device can be connected to each connector. The IO-Link devices must conform to port class A. Port class B is also possible if additionally potential distribution modules are used. One digital input can be used additionally with each connector.
Process data are exchanged with the connected IO-Link device via each IO-Link port. Additionally acyclic data can be exchanged over here (diagnostic data, parameter data, status information data). The parameter data of the connected IO-Link devices can be stored in the master module, where they are managed by a parameterising server (data-storage). Thereby it is very comfortable to change the IO-Link master or a single IO-Link device (from IO-Link specification V1.1 on).
The four communication channels can be use as digital inputs or outputs together with standard field devices.
A status LED is assigned to each channel. The module electronics supply the connected devices with power from the input current path (I_{IN}).
The inputs are protected against voltage surges and overcurrent. Voltages that exceed ±30 V may cause the destruction of the module.

ATTENTION

The module can be destroyed!

The voltage between C/Q and L- must not exceed the voltage between L+ and L-.

► If the connected I/O-Link device uses the C/Q input you have to support the I/O-Link device via L+ and L- on the same plug only.

Detailed information about the UR20-IO-Link module can be found in the **Communication module UR20-4COM-IO-LINK-V2** manual.
The manual can be downloaded from the Weidmüller website.

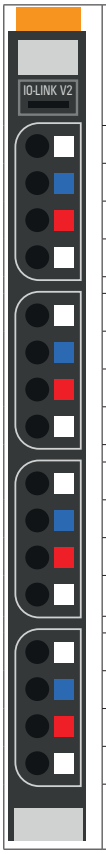

	Module status LED Green: Communication on system bus Red: Error
1.1	Yellow: Status COM 1
1.2	Red: Error IO-Link port 1
1.4	Yellow: Status DI 1
2.1	Yellow: Status COM 2
2.2	Red: Error IO-Link port 2
2.4	Yellow: Status DI 2
3.1	Yellow: Status COM 3
3.2	Red: Error IO-Link port 3
3.4	Yellow: Status DI 3
4.1	Yellow: Status COM 4
4.2	Red: Error IO-Link port 4
4.4	Yellow: Status DI 4

LED indicators UR20-4COM-IO-LINK-V2, troubleshooting see Chapter 12

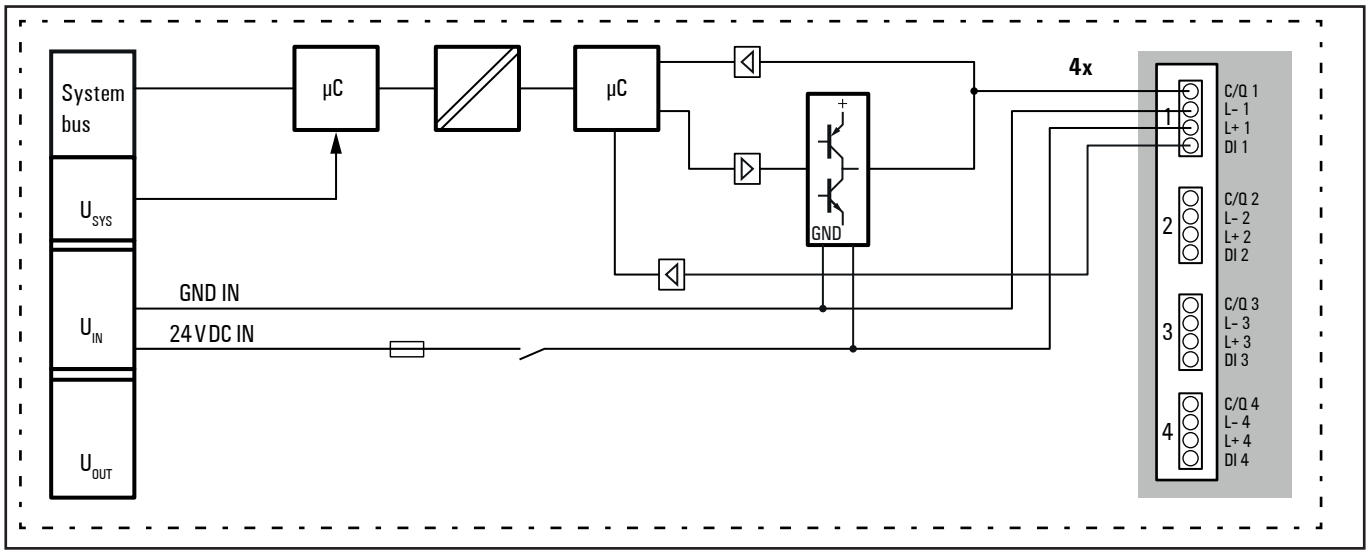

Block diagram UR20-4COM-IO-LINK-V2

Technical data UR20-4COM-IO-LINK-V2 (Item No. 2819690000)

System data	
Data	Process, parameter and diagnostic data depend on the coupler used, see coupler description
Interface	u-remote system bus
System bus transfer rate	48 Mbps / 192 Mbps
Digital inputs	
Number	4
Sensor types	Type 1 (C/Q) and Type 3 (DI) as per IEC 61131-2[2)]
Low input voltage	< 5 V
High input voltage	> 11 V
IO-Link interfaces	
Number	4
Type	IO-Link as per IEC 61131-9
Transfer rate	4.8 kBaud / 38.4 kBaud / 230.4 kBaud, depending on the connected IO-Link device
Output current C/Q (in DO mode)	0.1 A
Input type C/Q (in DI mode)	Type 1 as per IEC 61131-2
Output current L+	0.5 A per channel, total max. 2 A
Line break detection	no
Short-circuit-proof	yes
Module diagnosis	yes
Individual channel diagnosis	yes
Supply	
Supply voltage	24 V DC +20%/-15%
Current consumption from system current path I_{SYS}	8 mA
Current consumption from input current path I_{IN}	13 mA + sensor supply
General data	
Weight (operational status)	89 g
For additional general data see Section 3.4	

1) If C/Q is used as digital input, the connected device shall only be supplied via the L+ and L- connections of the respective channel.
2) With N-switching parameterisation, the hysteresis of DI 1 ... DI 4 exceeds the standard range of IEC 61131-2, type 3.

Overview of the editable parameters UR20-4COM-IO-LINK-V2

Channel	Description	Options	Default
0 ... 3	Operating mode C/Q	disabled (0) / DO (1) / DI (2) / IO-Link (3)	disabled
0 ... 3	Port cycle	Free running (0) / Fixed cycle (1)	Free running
0 ... 3	Port cycle time [n x 0.1 ms]	4 ... 1326	4
0 ... 3	IO-Link start-up	automatic (0) / manual (1)	automatic
0 ... 3	Validation	no device check (0) / same type of device V1.0 (1) / same type of device V1.1 (2)	no device check
0 ... 3	DS activation state	disabled (0) / Backup and Restore (1) / Restore (2)	disabled
0 ... 3	IO-Link vendor ID	0 ... 65535	no value
0 ... 3	IO-Link device ID	0 ... 16777215	no value
0 ... 3	CQ polarity	P-switching (0) / N-switching (1) / push-pull (DO) – high impedance (DI) (2)	P-switching
0 ... 3	Substitute value	Off (0) / On (1)	Off
0 ... 3	DI input channel polarity	P-switching (0) / N-switching (1)	P-switching
0 ... 3	Process data length input	0 Byte (0) / 1 Byte (1) / 2 Byte (2) / ... / 32 Byte (32) / auto (255)	auto
0 ... 3	Process data length output	0 Byte (0) / 1 Byte (1) / 2 Byte (2) / ... / 32 Byte (32) / auto (255)	auto

Channel settings and dependencies

Operating mode C/Q	DI	DO	IO-LINK	IO-LINK	IO-LINK	IO-LINK
Port cycle	–	–	–	x	x	x
Port cycle time [n x 0.1 ms]	–	–	–	x	x	x
IO-Link start-up	–	–	Automatically	Manually	Manually	Manually
Validation (Revision V1.0 / V1.1)	–	–	–	Rev. V1.0 (10)	Rev. V1.1 (11)	Rev. V1.1 (11)
DS activation state	–	–	–	–	–	x
IO-Link vendor ID (VID)	–	–	–	VID	VID	VID
IO-Link device ID (DID)	–	–	–	DID	DID	DID
CQ polarity	x	x	–	–	–	–
Substitute value	–	x	–	–	–	–
DI input channel polarity	x	x	x	x	x	x
Process data length input	x	x	x	x	x	x
Process data length output	x	x	x	x	x	x

– not used
x parameterisable by the user

Diagnostic data UR20-4COM-IO-LINK-V2

Name	Byte	Bit	Description	Default
Error indicator	0	0	Module error	0
		1	Internal Error	0
		2	External error	0
		3	Channel error	0
		4	Error	0
		5	Power supply fault	0
		6	Reserved	0
		7	Parameter error	0
Module type	1	0	Module Type 0x0A	
		1		
		2		
		3		
		4	Channel info available	1
		5	Reserved	0
		6	Reserved	0
		7	Lowspeed channel new data	0
Error byte 2	2	0	IO-Link Event in Queue	0
		1 ... 7	Reserved	0
Error byte 3	3	0 ... 2	Reserved	0
		3	Diagnostic Alarm Lost	0
		4	Communication fault	0
		5	Reserved	0
		6	Reserved	0
		7	Reserved	0
Channel type	4	0	Channel type 0x7B	1
		1		1
		2		0
		3		1
		4		1
		5		1
		6		1
		7	Reserved	0
Diagnostic bits per channel	5		Number of diagnostic bit per channel	16
Number of channels	6		Number of similar channels per module	4
Channel error	7	0	Error at channel 0	0
		1	Error at channel 1	0
		2	Error at channel 2	0
		3	Error at channel 3	0
		4 ... 7	Reserved	0
	8 ... 10	8 ... 31	Reserved	0

Diagnostic data UR20-4COM-IO-LINK-V2

Name	Byte	Bit	Description	Default
Error channel 0 Error channel 1 Error channel 2 Error channel 3	11 13 15 17	0	Short Circuit	0
		1	Undervoltage	0
		2	Overvoltage	0
		3	Overload	0
		4	Overtemperature	0
		5	Line Break	0
		6	Upper Limit Value	
		7	Lower Limit Value	0
Error channel 0 Error channel 1 Error channel 2 Error channel 3	12 14 16 18	0	Error	0
		1	Parameter fault	0
		2	Powersupply fault	0
		3	Fuse blown	0
		4	Communication fault	0
		5	Device lost	0
		6	Unknown Error	
		7	DS Error	0
Error channel 4 ... Error channel 15	19 ... 42	0 ... 7	Reserved	0
Time stamp	43-46		time stamp [µs] (32bit)	

Process data inputs UR20-4COM-IO-LINK-V2

Byte	Bit	Description
IB0	IX0.0	DI 1
	IX0.1	DI 2
	IX0.2	DI 3
	IX0.3	DI 4
	IX0.4	C/Q 1
	IX0.5	C/Q 2
	IX0.6	C/Q 3
	IX0.7	C/Q 4
IB1	IX1.0	Process data IN valid IO-Link-Port 1
	IX1.1	Process data IN valid IO-Link-Port 2
	IX1.2	Process data IN valid IO-Link-Port 3
	IX1.3	Process data IN valid IO-Link-Port 4
	IX1.4	Error IO-Link-Port 1
	IX1.5	Error IO-Link-Port 2
	IX1.6	Error IO-Link-Port 3
	IX1.7	Error IO-Link-Port 4
IB2 ...		Process data of the IO-Link device[1)]

1) The process data of the IO-Link device depend on which module has been chosen from the device description file. The mapping of the IO-Link devices depends on the length of their process data and the parameter settings.

Process data outputs UR20-4COM-IO-LINK-V2

Byte	Bit	Description
OB0	OX0.0	DO 1
	OX0.1	DO 2
	OX0.2	DO 3
	OX0.3	DO 4
	OX0.4	reserved
	OX0.5	reserved
	OX0.6	reserved
	OX0.7	reserved
OB1	OX1.0	Process data OUT valid IO-Link-Port 1
	OX1.1	Process data OUT valid IO-Link-Port 2
	OX1.2	Process data OUT valid IO-Link-Port 3
	OX1.3	Process data OUT valid IO-Link-Port 4
	OX1.4	reserved
	OX1.5	reserved
	OX1.6	reserved
	OX1.7	reserved
OB2 ...		Process data of the IO-Link device[1)]

1) The process data of the IO-Link device depend on which module has been chosen from the device description file. The mapping of the IO-Link devices depends on the length of their process data and the parameter settings.

The cyclic IO-Link process data is sent in any case. Using the bits **Process data OUT valid ...**, commands can be sent, that instruct the respective device how it should respond to this:

FALSE: (DeviceOperate) The cyclic process output data of the master are invalid or not yet present. The device waits for the MasterCommand „ProcessDataOutputOperate“, before it changes to regular operation. In this status, the cyclic process input data are already transmitted from the device to the master, which is indicated via the bits **Processdata IN valid ...** in IB1.

TRUE: (ProcessDataOutputOperate) The cyclic process output data are valid. The device should change to regular operation and respond to the process output data.

6.88 Safe I/O modules

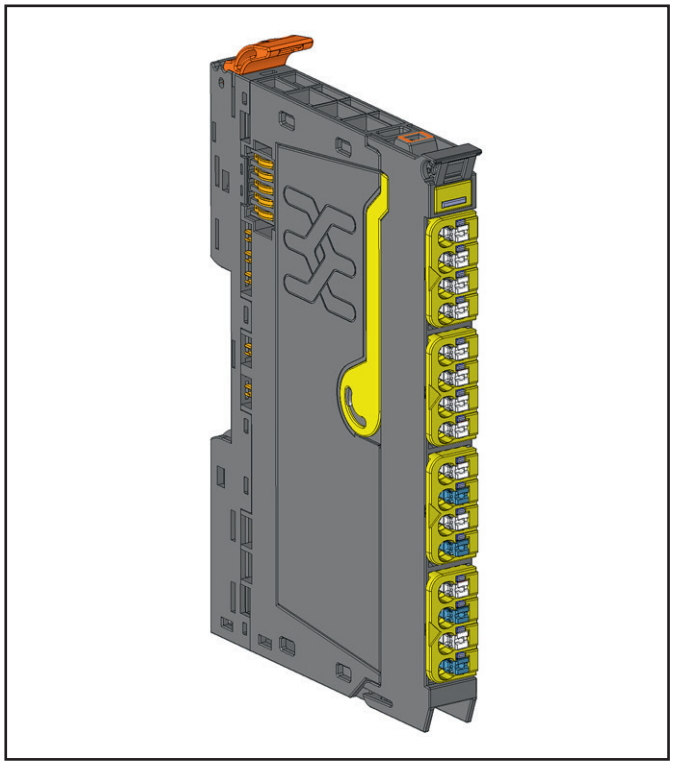

Safe input and output module UR20-4DI-4DO-PN...

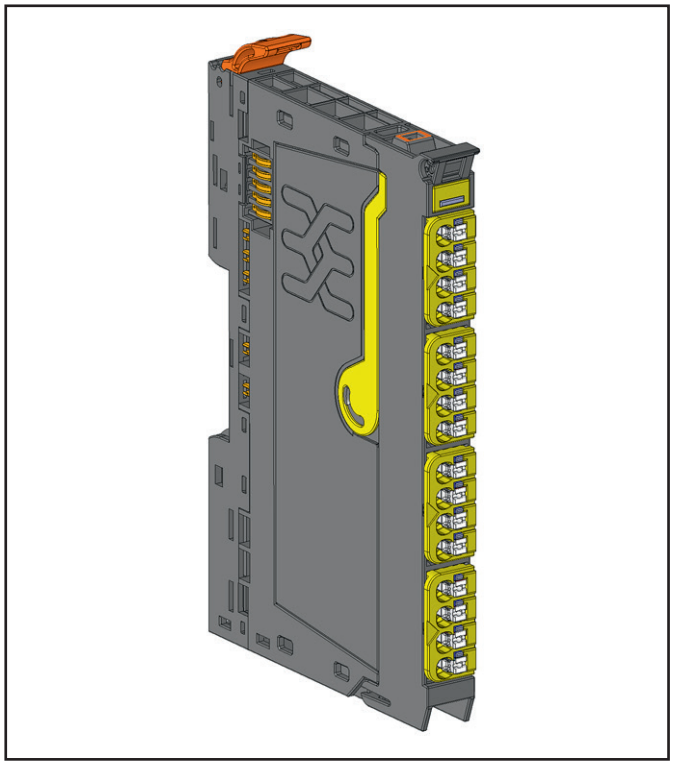

Safe input module UR20-8DI-PN...

The u-remote system provides variants of safe I/O modules for the different safety protcols.

For Fail Safe over EtherCAT (FSoE):
- UR20-4DI-4DO-PN-FSOE-V2 (2464580000) and UR20-4DI-4DO-PN-FSOE (1529780000): four safe inputs, four safe outputs, two inputs and outputs respectively can be parameterised P- or N-switching
- UR20-8DI-PN-FSOE-V2 (2464600000) and UR20-8DI-PN-FSOE (1529800000): eight inputs, four of which can be parameterised P- or N-switching

For PROFIsafe:
- UR20-4DI-4DO-PN-FSPS-V2 (2464570000) and UR20-4DI-4DO-PN-FSPS (1335060000): four safe inputs, four safe outputs, two inputs and outputs respectively can be parameterised P- or N-switching
- UR20-8DI-PN-FSPS-V2 (2464590000) and UR20-8DI-PN-FSPS (1335070000): eight inputs, four of which can be parameterised P- or N-switching

For CC-Link IE Safety:
- UR20-4DI-4DO-PN-FSCC (2742570000): four safe inputs, four safe outputs, two inputs and outputs respectively can be parameterised P- or N-switching
- UR20-8DI-PN-FSCC (2742580000): eight inputs, four of which can be parameterised P- or N-switching

Using safe I/O modules you can realise nearly all safety-related functions via your PLC according to the designed safety architectur, as for example:

- design up to four 2-channel safety circuits (AND-linked), e.g. for emergency shutdown buttons, safety door contacts and safety light grids
- shutdown up to four actuators safely

All product-specific information and notes on the use of safe I/O modules can be found in the **Modules for functional safety** manual.
The manual can be downloaded from the Weidmüller website.

6.89 Safe feed-in modules UR20-PF-O-xDI-SIL

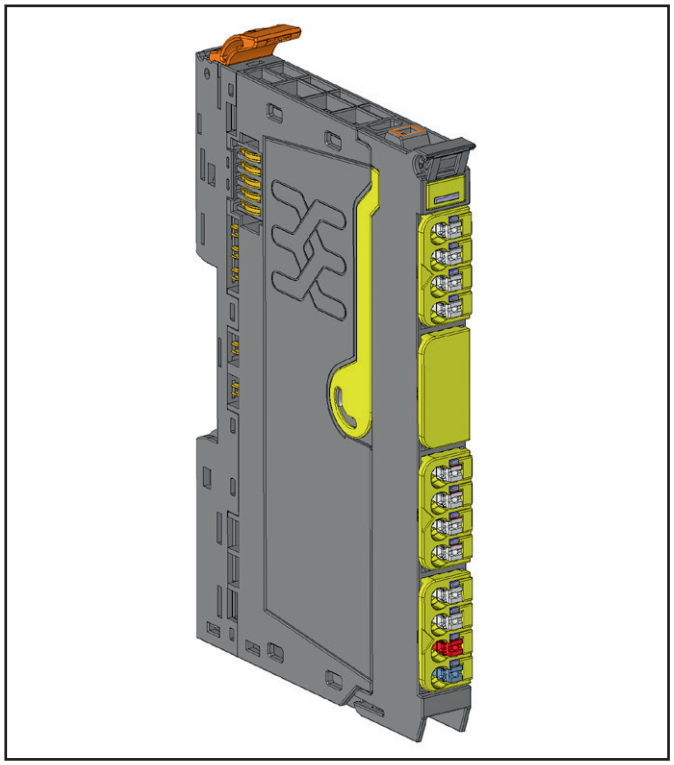

Safe feed-in module UR20-PF-O-1DI-SIL

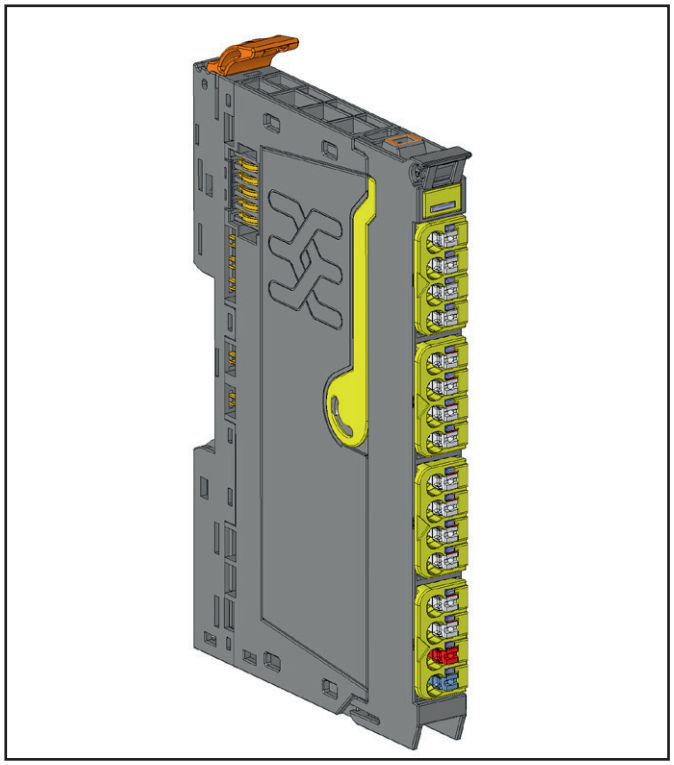

Safe feed-in module UR20-PF-O-2DI-SIL, UR20-PF-O-2DI-DELAY-SIL

The u-remote safe feed-in modules PF-O-xDI-SIL are intended for connecting safety-related equipment. The PF-O-xDI-SIL modules are controlled with non-solid-state safety encoders and or safety encoders with OSSD outputs. The safety function consists of the safe interruption of 24 V outputs, the safe status of which is “24 V disconnected” (current path for outputs and the OSSD output are disconnected).
Each PF-O-xDI-SIL module safely disconnects the subsequent UR20 output modules; in each case, the safety segment up to the next following PF-O power-feed module. A safety-oriented input circuit together with pulsed outputs serve for detecting broken lines and short circuits.

Three types of PF-O-xDI-SIL modules are available in the u-remote system:
- UR20-PF-O-1DI-SIL (Item No. 1335030000): one safe input
- UR20-PF-O-2DI-SIL (Item No. 1335050000): two safe inputs
- UR20-PF-O-2DI-DELAY-SIL (Item No. 1335040000): two safe inputs, delayed disconnection possible

With PF-O-xDI-SIL modules, it is possible to implement the following safety functions:
- Up to two 2-channel safety circuits (AND linked), e.g. for emergency shutdown buttons, safety door contacts and safety light grids
- A range of output modules within a u-remote station is supplied with safe power through the switched +24 V OSSD output.
- PF-O-xDI-SIL modules can be cascaded.

In contrast to other power-feed modules the PF-O-xDI-SIL modules are active modules. Therefore they need to be considererd in hardware configuration. Also up to three passive modules can be arranged directly behind.

All product-specific information and notes on the use of PF-O-xDI-SIL modules can be found in the **Modules for functional safety** manual.
The manual can be downloaded from the Weidmüller website.

6.90 Power-feed module for input current path UR20-PF-I

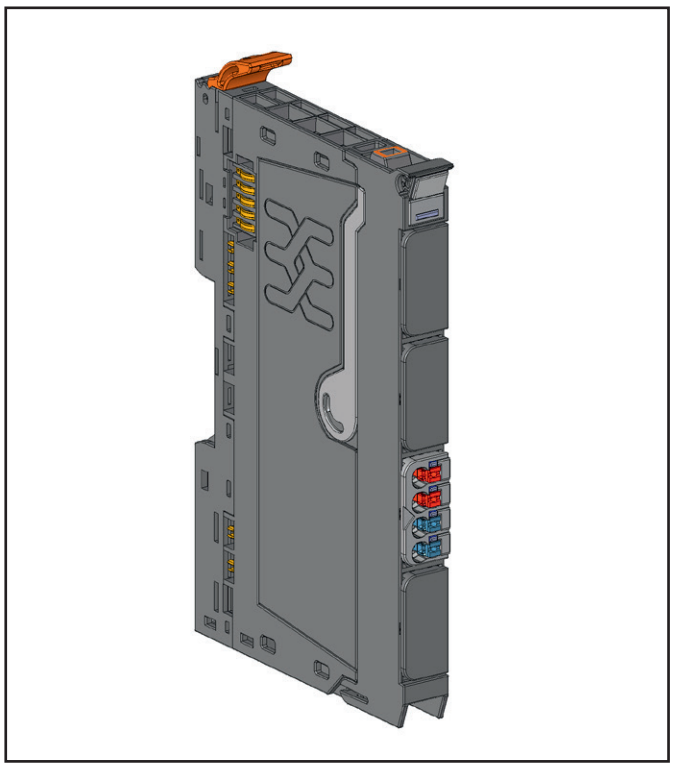

Power-feed module for input current path UR20-PF-I (Item No. 1334710000)

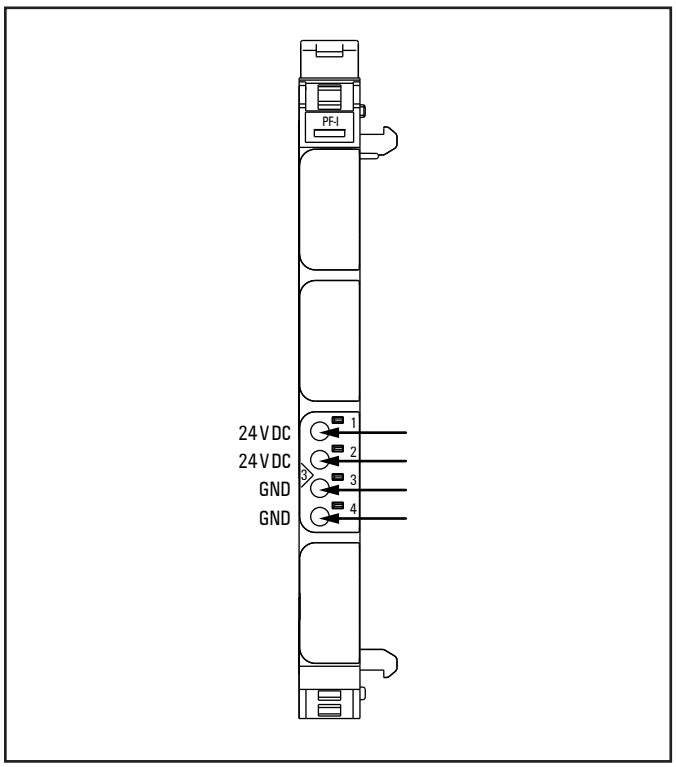

Connection diagram UR20-PF-I

Power-feed modules are used to refresh the current paths and isolate the power supply. The u-remote station's main power supply is always fed in via the coupler. A power-feed module UR20-PF-I must be connected if the current demand of the series of input modules is too large.

The maximum feed-in current in the input current path via the 4-pole connector is 10 A. Details required to calculate current demand and power supply see section 4.5.

Power-feed modules are passive modules without fieldbus communication, therefore they are not considered during configuration.

In a u-remote station, a maximum of three passive modules may be installed directly behind each other, then an active module must follow. Any number of passive modules can be placed behind the last active module. Passive modules are power-feed module, potential distribution module, empty slot module and auxiliary module.

ATTENTION

Risk of material damage!

In the case of a maximum power supply of >8 A and a maximum temperature of >+55 °C, all four contacts must be connected with 1.5 mm² wiring!



	Module status LED Green: voltage applied and is >18 V DC
3.1	Green: Supply voltage for input current path > 18 V DC
3.2	Red: Supply voltage for input current path < 18 V DC
3.4	Red: Internal fuse defective, replace module

LED indicators UR20-PF-I, troubleshooting see Chapter 12

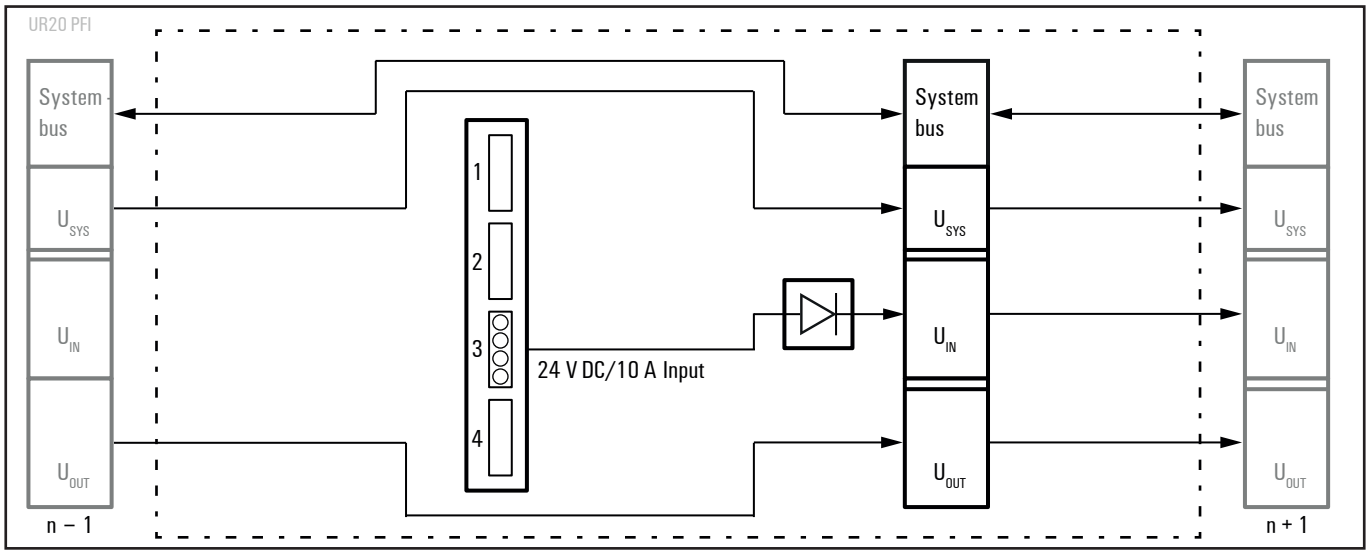

Block diagram UR20-PF-I

Technical data UR20-PF-I (Item No. 1334710000)

Supply	
Supply voltage for input modules	24 V DC +20 %/-15 %
Maximum feed current for input modules	10 A
Current consumption from input current path I_{IN}	10 mA
General data	
Weight (operational status)	76 g
For additional general data, see Section 3.4	

6.91 Power-feed module for output current path UR20-PF-O



Power-feed module for output current path UR20-PF-O (Item No. 1334740000)

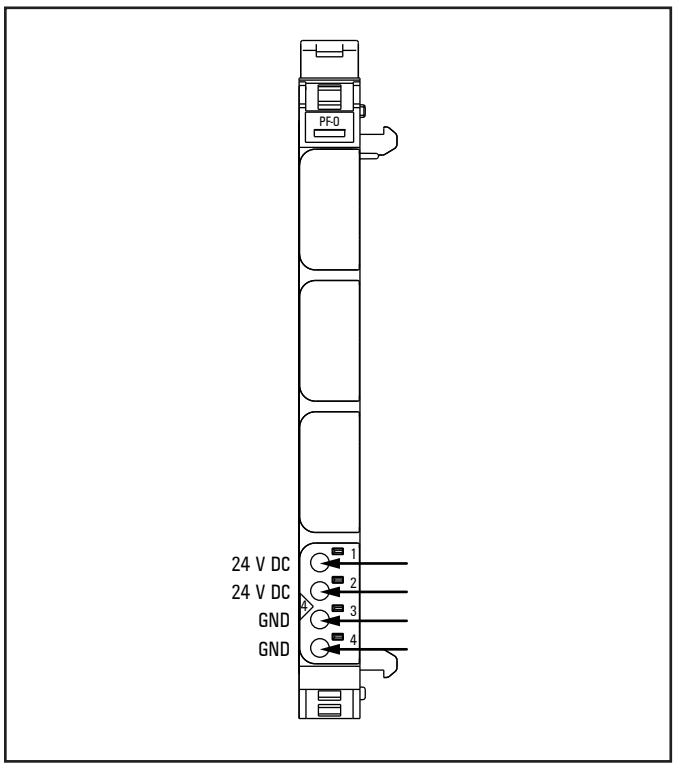

Connection diagram UR20-PF-O

Power-feed modules are used to refresh the current paths and isolate the power supply. The u-remote station's main power supply is always fed in via the coupler. A power-feed module UR20-PF-O must be connected if the current demand of the series of output modules is too large.

The maximum feed-in current in the output current path via the 4-pole connector is 10 A. Details required to calculate current demand and power supply see section 4.5.

Power-feed modules are passive modules without fieldbus communication, therefore they are not considered during configuration.

In a u-remote station, a maximum of three passive modules may be installed directly behind each other, then an active module must follow. Any number of passive modules can be placed behind the last active module. Passive modules are power-feed module, potential distribution module, empty slot module and auxiliary module.

ATTENTION

Risk of material damage!

In the case of a maximum power supply of >8 A and a maximum temperature of >+55 °C, all four contacts must be connected with 1.5 mm² wiring!



	Module status LED Green: voltage applied and is > 18 V DC
4.1	Green: Supply voltage for output circuit > 18 V DC
4.2	Red: Supply voltage for output circuit < 18 V DC
4.4	Red: Internal fuse defective, replace module

LED indicators UR20-PF-O, troubleshooting see Chapter 12

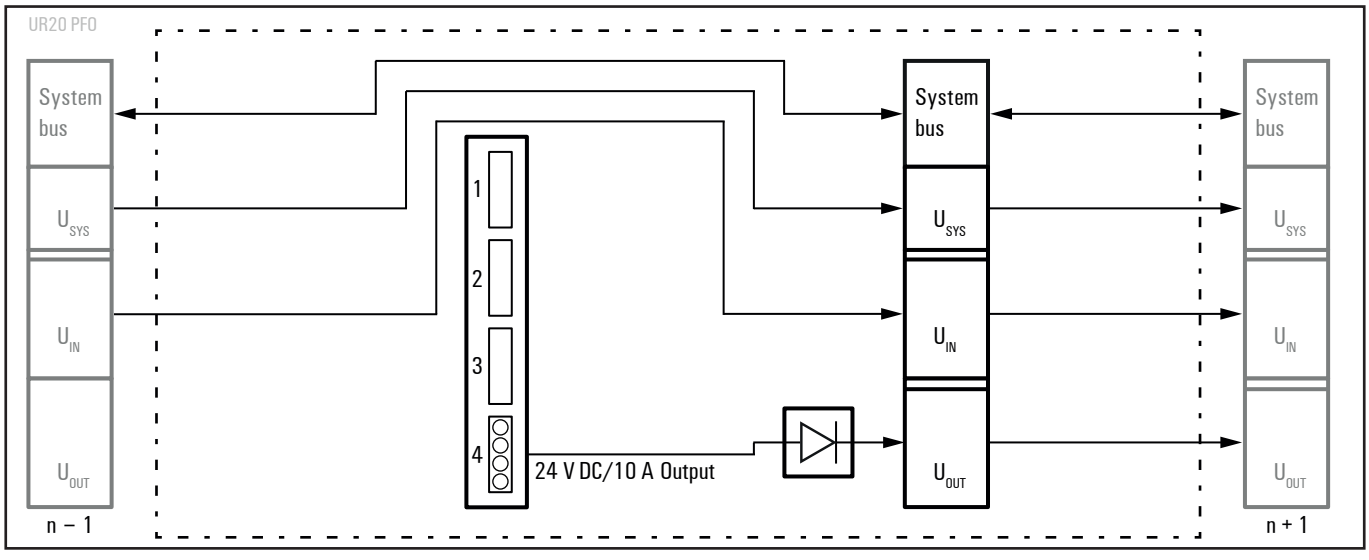

Block diagram UR20-PF-O

Technical data UR20-PF-O (Item No. 1334740000)

Supply	
Supply voltage for output modules	24 V DC +20 %/-15 %
Maximum feed-in current for output modules	10 A
Current consumption from output current path I_{OUT}	10 mA
Can be used with PF-O-xDI-SIL	no
General data	
Weight (operational status)	76 g
For additional general data, see Section 3.4	

6.92 Potential distribution module for input current path UR20-16AUX-I

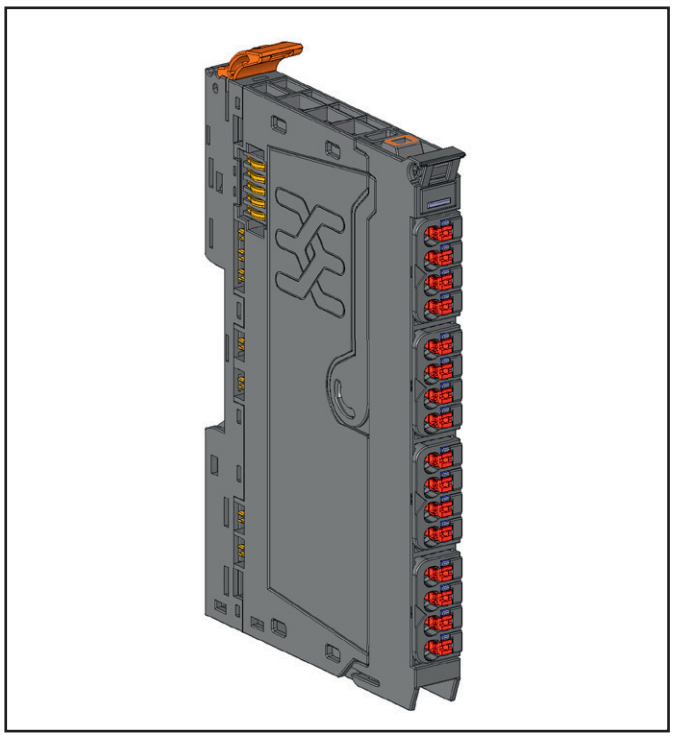

Power-feed module for output current path UR20-16AUX-I (Item No. 1334770000)

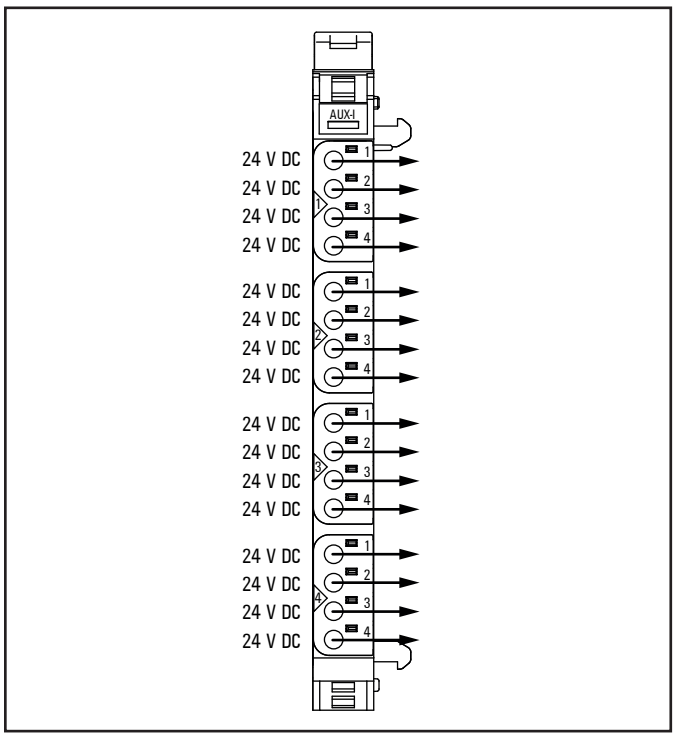

Connection diagram UR20-16AUX-I

The potential distribution module UR20-16AUX-I provides 16 connections for +24 V from the input current path. Potential distribution modules are passive modules without fieldbus communication, therefore they are not considered during configuration.

In a u-remote station, a maximum of three passive modules may be installed directly behind each other, then an active module must follow. Any number of passive modules can be placed behind the last active module. Passive modules are power-feed module, potential distribution module, empty slot module and auxiliary module.

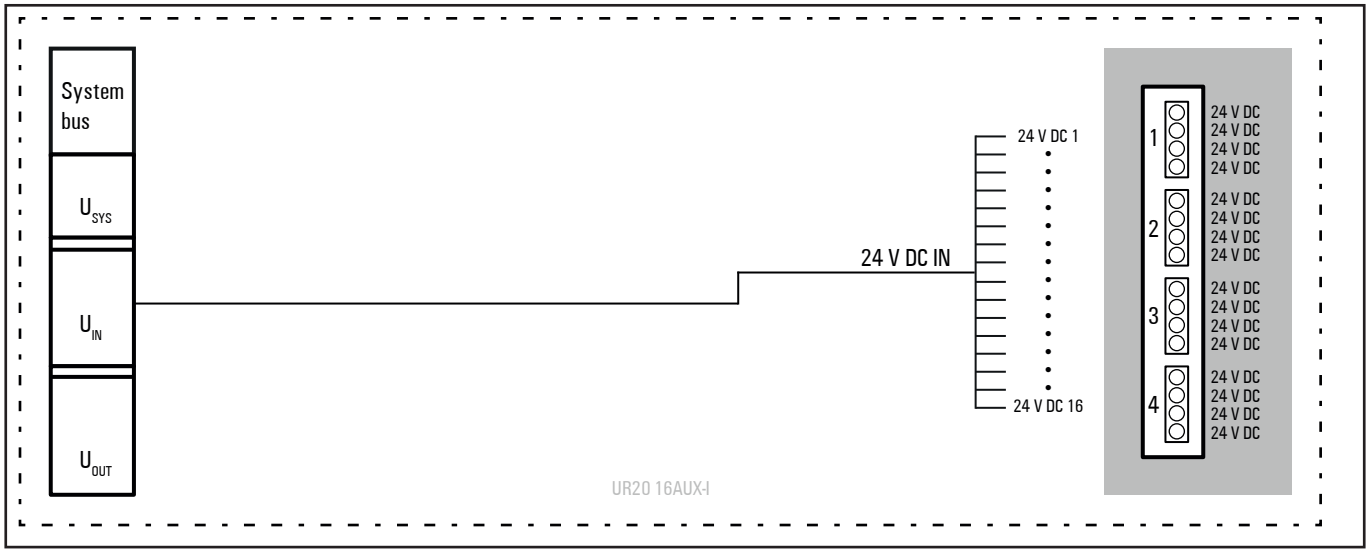

Block diagram UR20-16AUX-I

Technical data UR20-16AUX-I (Item No. 1334770000)

Supply	
Supply voltage	24 V DC +20 %/-15 % (from input current path)
General data	
Weight (operational status)	84 g
For additional general data, see Section 3.4	

6.93 Potential distribution module for output current path UR20-16AUX-O

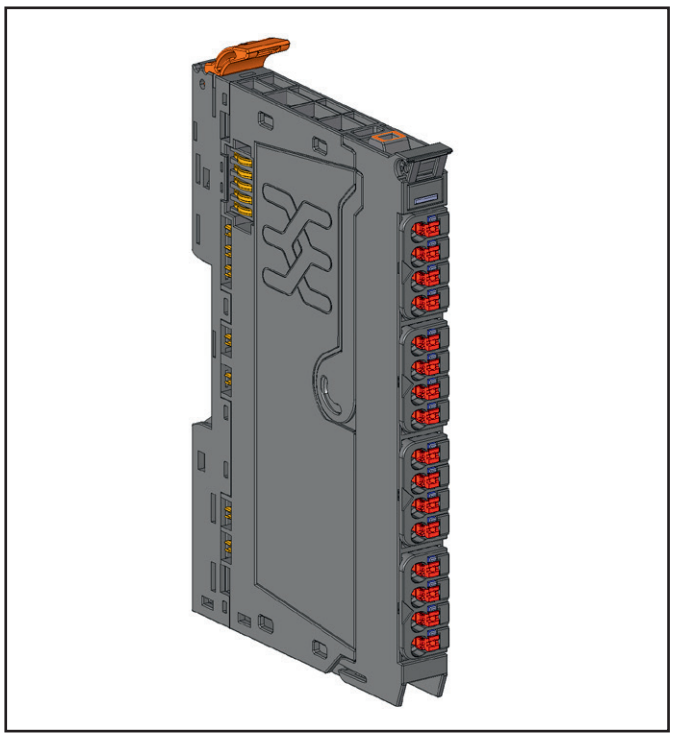

Potential distribution module for output current path UR20-16AUX-O (Item No. 1334780000)

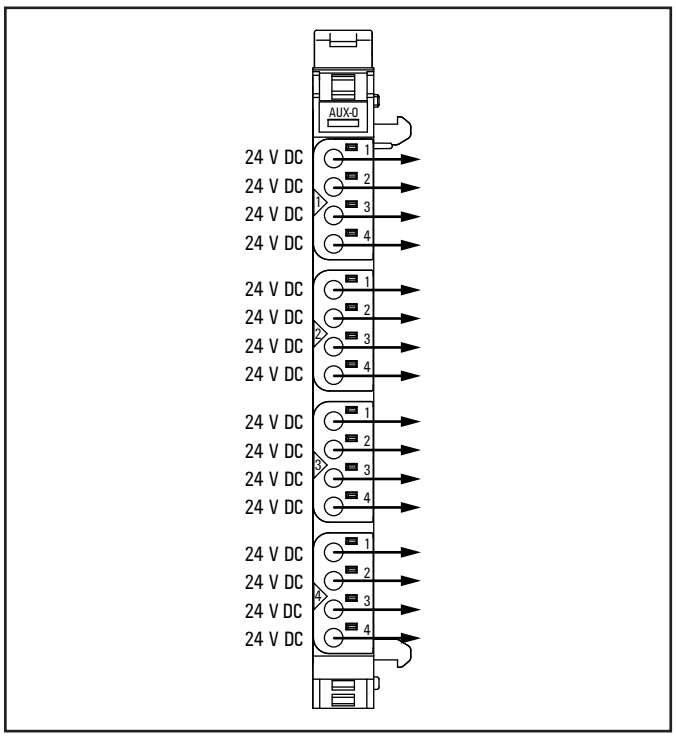

Connection diagram UR20-16AUX-O

The potential distribution module UR20-16AUX-O provides 16 connections for +24 V from the output current path. Potential distribution modules are passive modules without fieldbus communication, therefore they are not considered during configuration.

In a u-remote station, a maximum of three passive modules may be installed directly behind each other, then an active module must follow. Any number of passive modules can be placed behind the last active module. Passive modules are power-feed module, potential distribution module, empty slot module and auxiliary module.

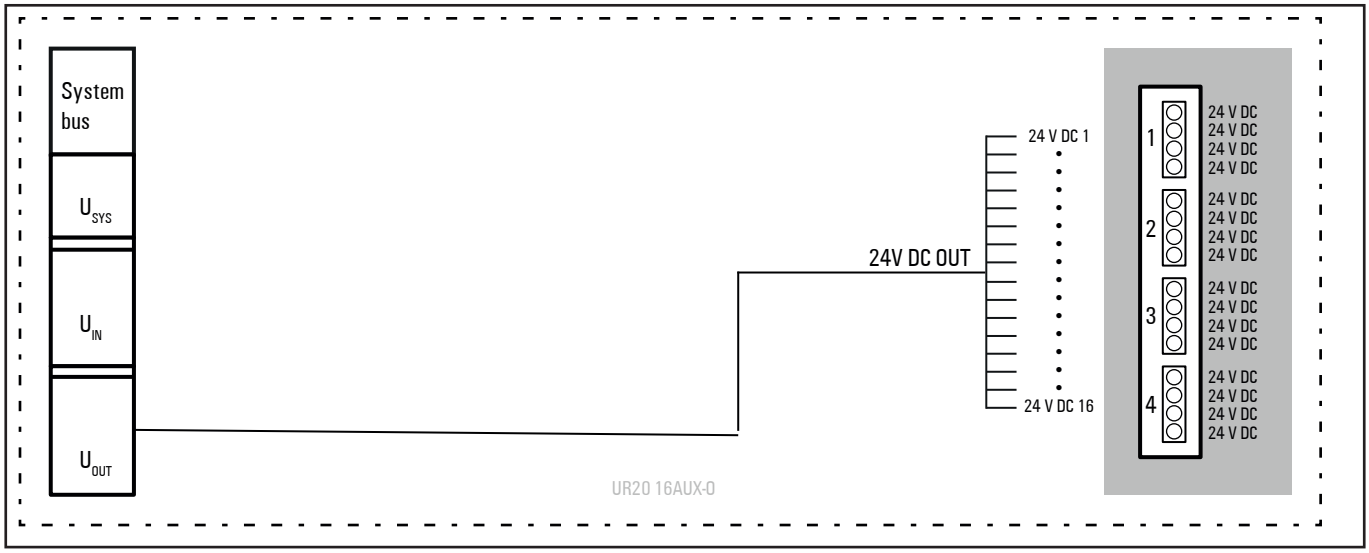

Block diagram UR20-16AUX-O

Technical data UR20-16AUX-O (Item No. 1334780000)

Supply	
Supply voltage	24 V DC +20 %/-15 % (from output current path)
Can be used with PF-O-xDI-SIL	yes
General data	
Weight (operational status)	84 g
For additional general data, see Section 3.4	

6.94 Potential distribution module for functional earth UR20-16AUX-FE

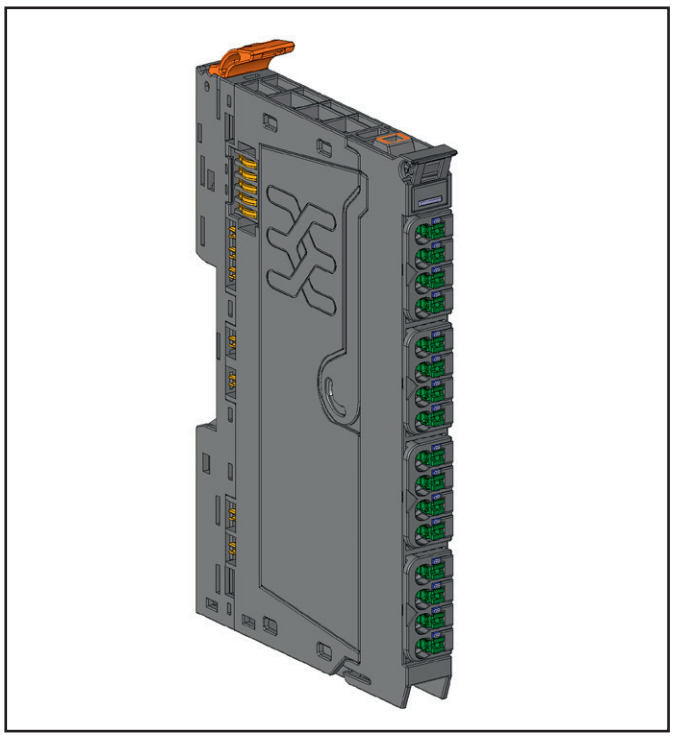

Potential distribution module for output current path UR20-16AUX-FE (Item No. 1334790000)

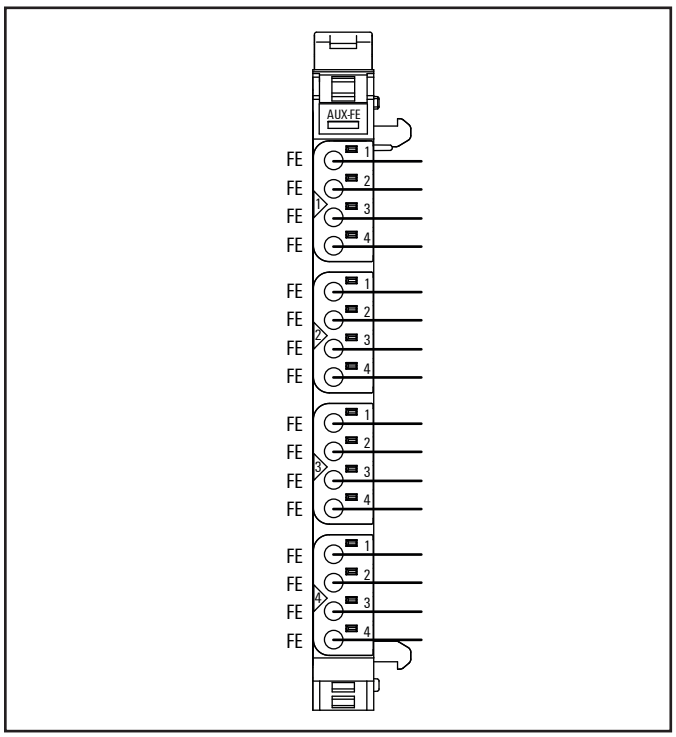

Connection diagram UR20-16AUX-FE

The potential distribution module UR20-16AUX-FE provides 16 connections for the functional earth. Potential distribution modules are passive modules without fieldbus communication, therefore they are not considered during configuration.

In a u-remote station, a maximum of three passive modules may be installed directly behind each other, then an active module must follow. Any number of passive modules can be placed behind the last active module. Passive modules are power-feed module, potential distribution module, empty slot module and auxiliary module.

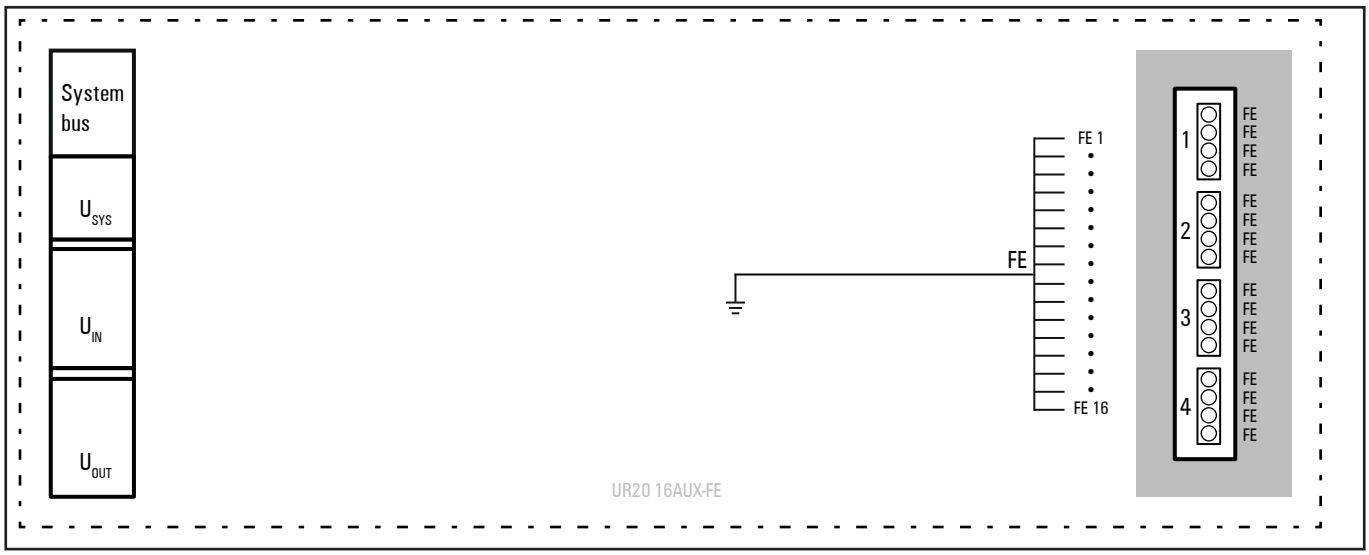

Block diagram UR20-16AUX-FE

Technical data UR20-16AUX-FE (Item No. 1334790000)

Supply	
Supply voltage	None
General data	
Weight (operational status)	84 g
For additional general data, see Section 3.4	

6.95 0-V potential distribution module for the input current path UR20-16AUX-GND-I

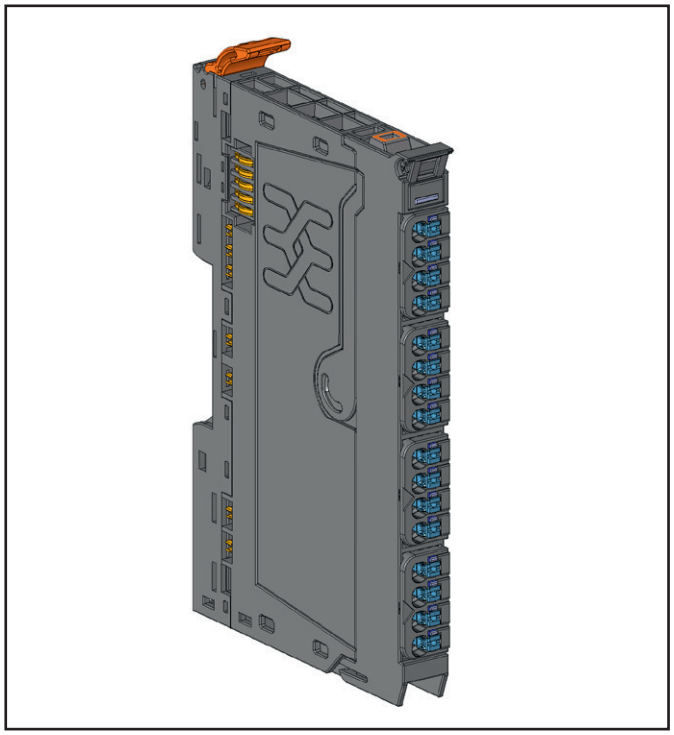

0-V potential distribution module for the input current path UR20-16AUX-GND-I
(Item No. 1334800000)

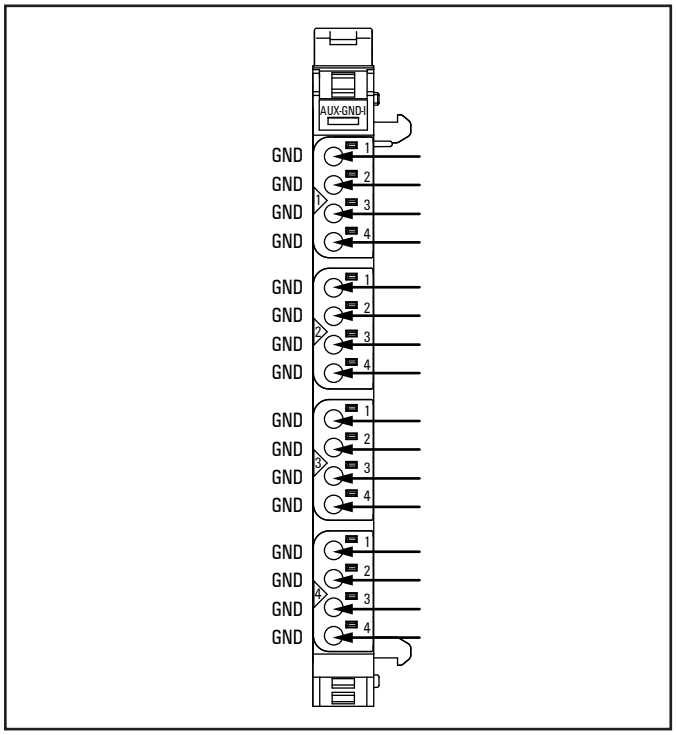

Connection diagram UR20-16AUX-GND-I

The potential distribution module UR20-16AUX-GND-I provides 16 connections for 0 V from the input current path. Potential distribution modules are passive modules without fieldbus communication, therefore they are not considered during configuration.

In a u-remote station, a maximum of three passive modules may be installed directly behind each other, then an active module must follow. Any number of passive modules can be placed behind the last active module. Passive modules are power-feed module, potential distribution module, empty slot module and auxiliary module.

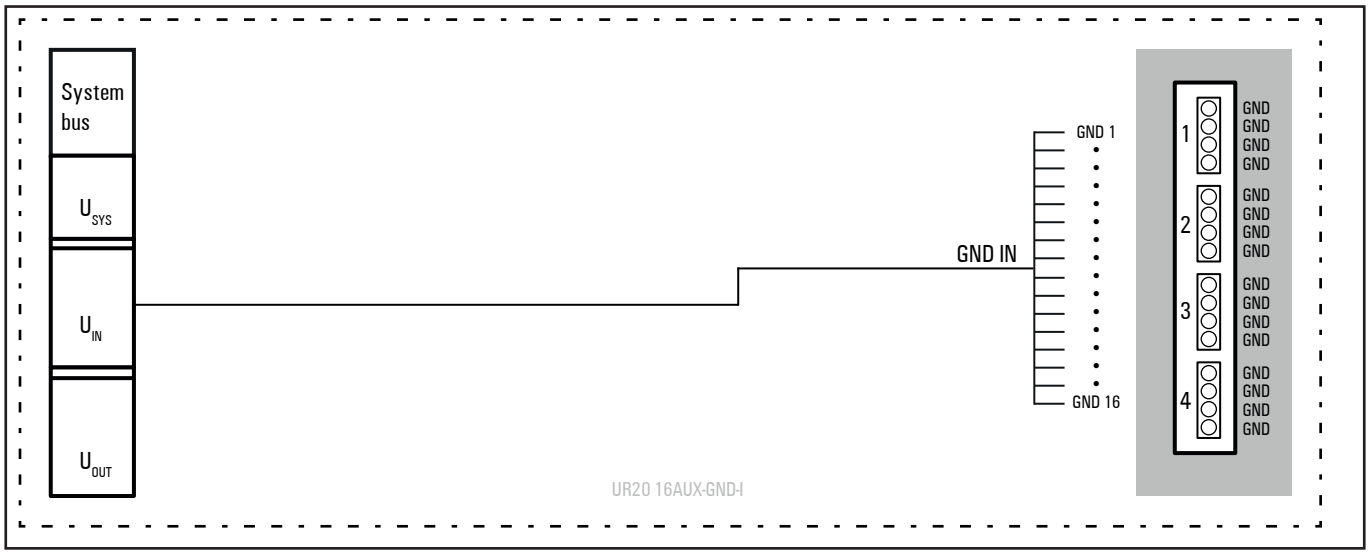

Block diagram UR20-16AUX-GND-I

Technical data UR20-16AUX-GND-I (Item No. 1334800000)

Supply	
Supply voltage	0 V (from input current path)
General data	
Weight (operational status)	84 g
For additional general data, see Section 3.4	

6.96 0-V potential distribution module for the output current path UR20-16AUX-GND-0

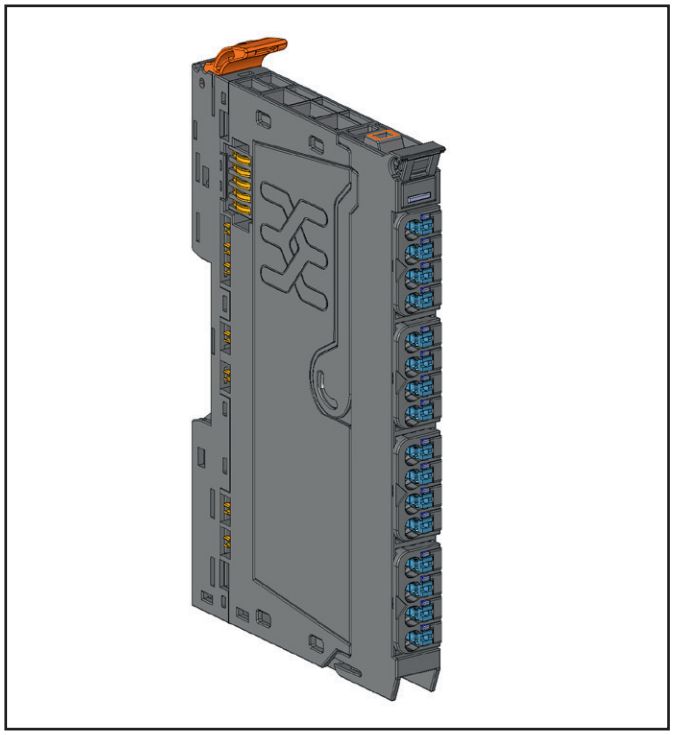

0-V potential distribution module for the output current path UR20-16AUX-GND-0
(Item No. 1334810000)

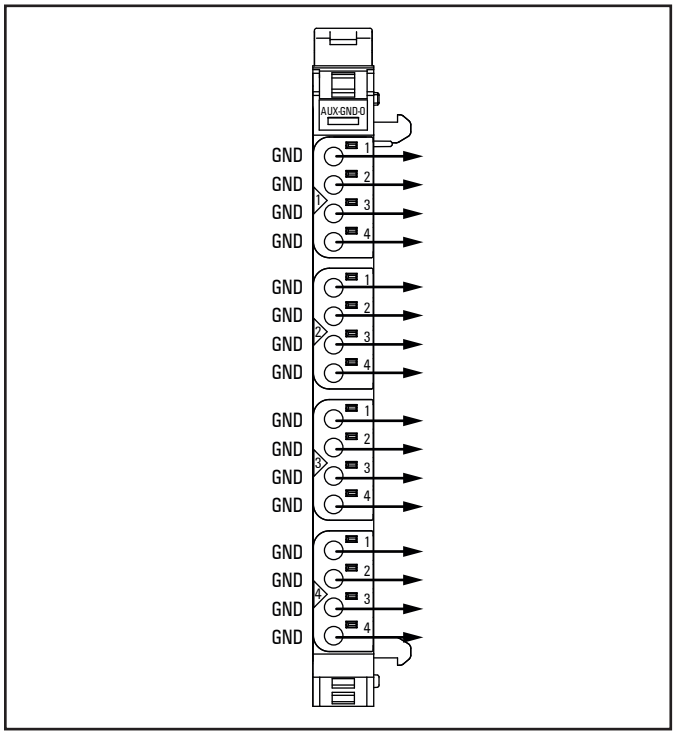

Connection diagram UR20-16AUX-GND-0

The potential distribution module UR20-16AUX-GND-0 provides 16 connections for 0 V from the output current path. Potential distribution modules are passive modules without fieldbus communication, therefore they are not considered during configuration.

In a u-remote station, a maximum of three passive modules may be installed directly behind each other, then an active module must follow. Any number of passive modules can be placed behind the last active module. Passive modules are power-feed module, potential distribution module, empty slot module and auxiliary module.

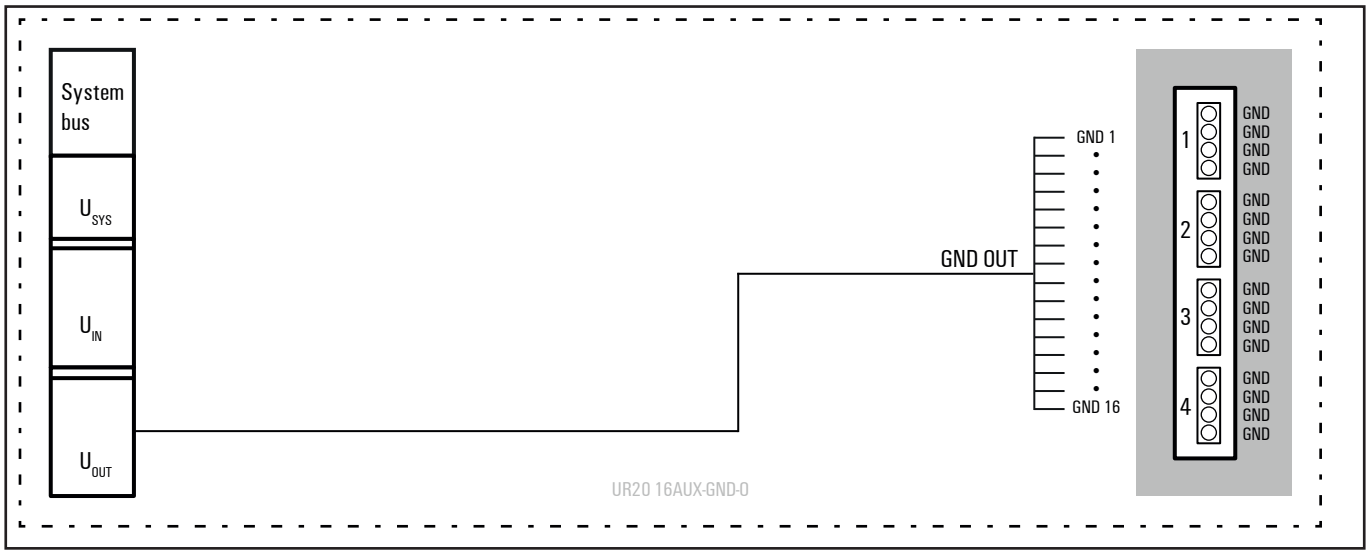

Block diagram UR20-16AUX-GND-0

Technical data UR20-16AUX-GND-O (Item No. 1334810000)

Supply	
Supply voltage	0 V (from output current path)
Can be used with PF-O-xDI-SIL	yes
General data	
Weight (operational status)	84 g
For additional general data, see Section 3.4	

6.97 Auxiliary module UR20-AUX-VSYS



Auxiliary UR20-AUX-VSYS (Item No. 2919660000)

The UR20-AUX-VSYS auxiliary module is part of the hot swap optimisation that was provided with the UR20 coupler firmware update in February 2025. In combination with a fieldbus coupler that has recieved this update, the module has the effect of preventing short-term implausible input data or output states that can occur on the entire UR20 station when an electronic unit is unplugged or plugged.

- You can find the corresponding firmware version number in the release notes of the respective coupler. You can find the release notes in the download area of the product catalogue or in the Support Center.
- You can find a list of hot swap capable modules in Chapter 10.2.

ATTENTION

► Observe the instructions in chapter 10 before unplugging or plugging in an electronic unit.

ATTENTION

If the u-remote station contains a safety segment with safe power-feed modules, the auxiliary module may only be placed outside this safety segment, otherwise the fail-safe insulation cannot be ensured.

► Place the auxiliary module either in front of the safety segment or place it behind the safety segment and behind a regular power refresh UR20-PF-O module.

The module is a passive module without fieldbus communication.

In a u-remote station, a maximum of three passive modules may be installed directly behind each other, then an active module must follow. Any number of passive modules can be placed behind the last active module. Passive modules are power-feed module, potential distribution module, empty slot module and auxiliary module.

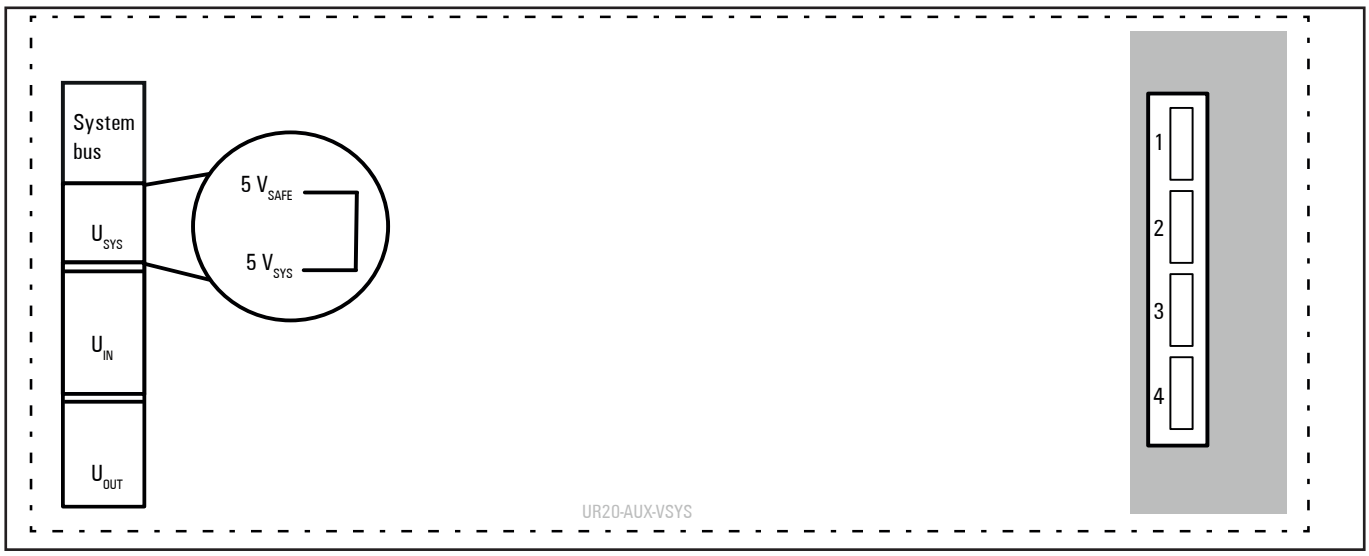

Block diagram UR20-AUX-VSYS

Technical data UR20-AUX-VSYS (Item No. 2919660000)

General Data	
Weight (operational data)	70 g
For additional general data, see Section 3.4	

6.98 Empty slot module UR20-ES

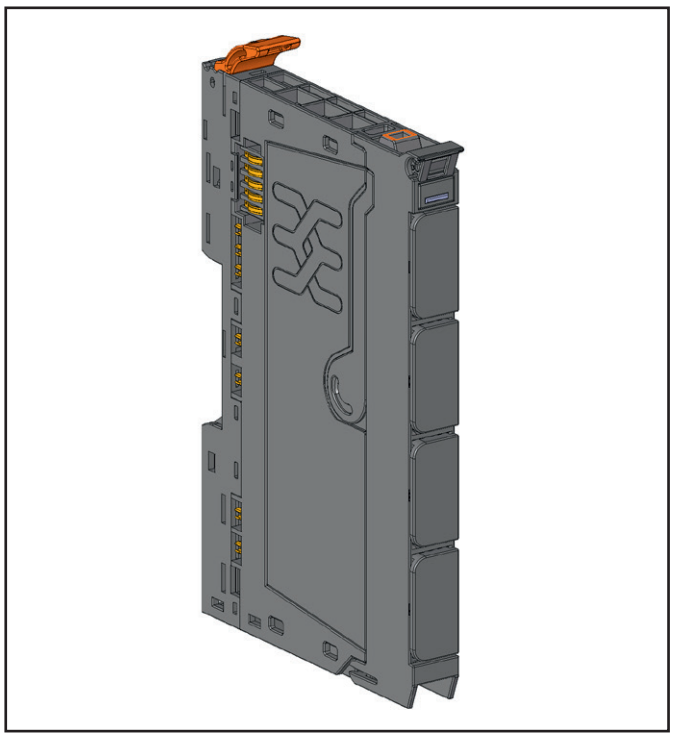

Empty slot module UR20-ES (Item No. 1315770000)

Empty slot modules can be integrated as reserve modules in a station. They bridge all contacts in the basic module 1:1 and otherwise have no function.
Empty slot modules are passive modules without fieldbus communication, therefore they are not considered during configuration.

In a u-remote station, a maximum of three passive modules may be installed directly behind each other, then an active module must follow. Any number of passive modules can be placed behind the last active module. Passive modules are power-feed module, potential distribution module, empty slot module and auxiliary module.

Technical data UR20-ES (Item No. 1315770000)

General data	
Weight (operational status)	70 g
For additional general data, see Section 3.4	

6.99 Termination kit, end bracket for vertical installation

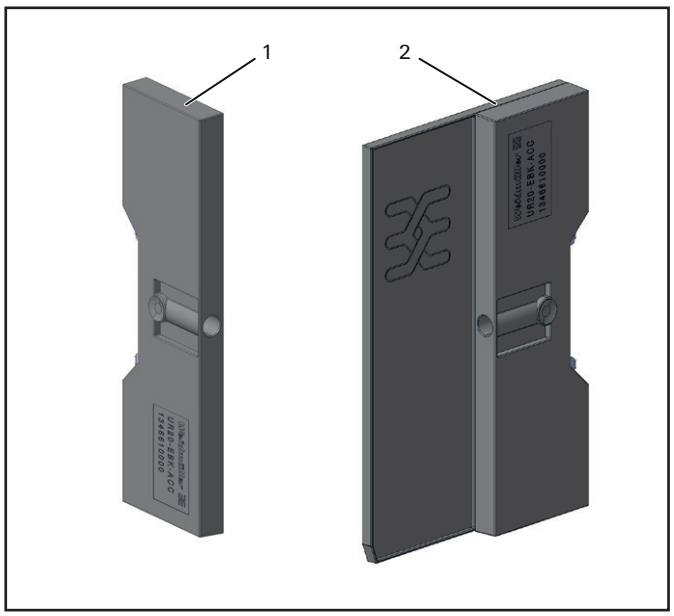

Termination kit UR20-EBK-ACC (Item No. 1346610000)

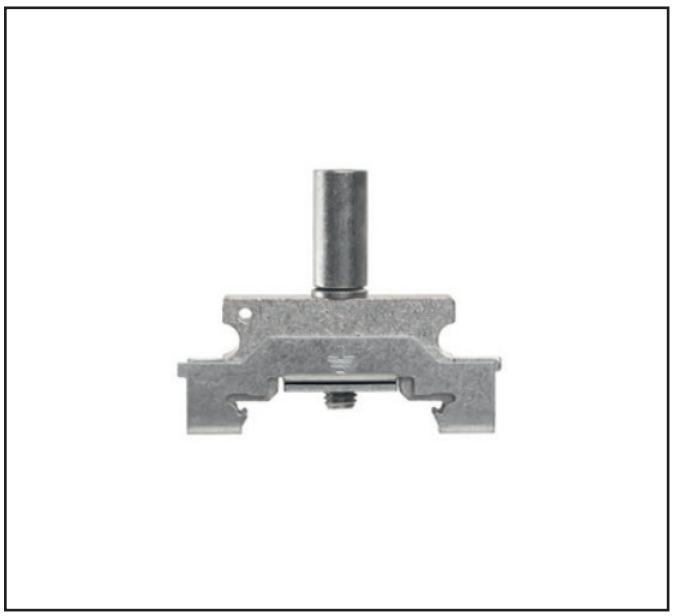

End bracket for vertical installation MEW 35/1 (Item No. 1805610000)

Each UR20-FBC fieldbus coupler is delivered together with a termination kit UR20-EBK-ACC. This comprises two end brackets and an end plate. The end plate protects the contacts on the last module at the end of the u-remote station. The station is fixed to the DIN rail on both sides via the end brackets.

The MEW 35/1 end bracket is additionaly required for the vertical installation of a u-remote station. It is to be ordered separately.

Technical data

Weight (operational status)	
UR20-EBK-ACC (Item No. 1346610000)	51 g
MEW 35/1 (Item No. 1805610000)	66 g

7 Installation

⚠ WARNING

Explosion risk!

During assembly work, sparks can form and surfaces may become excessively hot.

- ► Before assembly, make sure that there is not a potentially explosive atmosphere!
- ► For applications in potentially explosive atmospheres, observe the installation and construction requirements of IEC 60079-7 and/or country-specific regulations.

⚠ WARNING

Dangerous contact voltage!

- ► Carry out assembly and wiring work on the u-remote station only when the power supply is disconnected.
- ► Make sure that the place of installation (switch cabinet etc.) has been disconnected from the power supply!

7.1 Preparations for assembly

The u-remote station is designed for installation in switch cabinets, terminals or switch boxes in decentralised systems. The fieldbus coupler and I/O modules conform to degree of protection IP20.

Environmental conditions

Make sure that the permitted environmental conditions for installation and operation are observed (see the general technical data in Sections 3.2 and 3.4).

DIN rail

The u-remote station is designed to be installed on a DIN rail (35 × 7.5 mm or 35 x 15 mm) made from steel or galvanised steel according to EN 60715. The DIN rail must be mounted prior to the installation of the u-remote station.

The DIN rail must be attached to the surface at least every 20 cm to protect it from vibration and impact. If it is installed on earthed mounting plates, it does not have to be separately earthed.

Stripping lengths

The required stripping length for every Weidmüller product is specified in mm. These lengths, e.g. 6 mm ± 0.5 mm, ≥ 10 mm ±1 mm, must be observed. This also applies to the use of wire-end ferrules. The external dimensions of the crimped wire-end ferrules must conform with IEC-60947-1. For detailed information see section 7.5.

Unpacking the delivery

All of the elements that make up the u-remote station are packaged individually for delivery.

- ► Please check the delivery for completeness and transport damage.
- ► Please report any transport damage immediately to the respective transport company.

ATTENTION

The product can be destroyed by electrostatic discharge!

The components in the u-remote series can be destroyed by electrostatic discharge.

- ► Please make sure that personnel and work equipment are adequately earthed!
- ► Unpack all parts and sort the modules into the installation sequence as per the instructions.
- ► Dispose of all packaging in accordance with the local disposal guidelines. The cardboard packaging from the modules and fieldbus couplers can be sent for paper recycling.

Use in a potentially explosive atmosphere

Please regard the safety notes in section 2.3.

If the u-remote station is used in a potentially explosive atmosphere rated as Zone 2, the housing must meet the requirements of explosion protection type Ex n or Ex e and degree of protection IP54. Sensors and actuators that are located in Zone 2 or in a safe zone can be connected. All cable glands on the housing must be approved for Ex e.

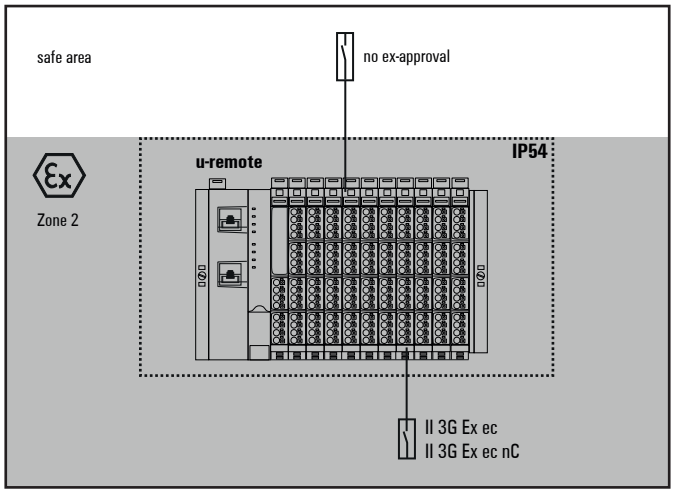

Use in a potentially explosive atmosphere

Installation position

The u-remote station is usually installed on a horizontally positioned DIN rail.

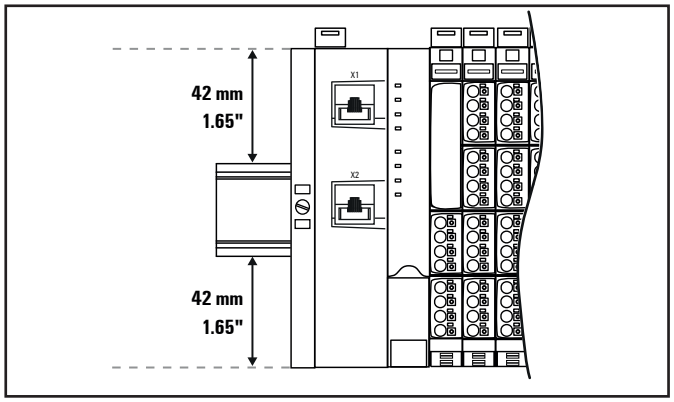

Installation position of the u-remote station on the DIN rail (horizontal installation)

Installation on vertically positioned DIN rails is also possible. In this case however, the heat dissipation is reduced such that the derating values change (see Section 4.5).

In the case of vertical mounting, the fieldbus coupler must always be arranged as the first module at the bottom and secured with a reinforced end bracket for vertical mounting (Item No. 1805610000).

Installation distances

Depending on how the station shielding is implemented, the specified distances may have to be larger than those given below.

Ensure compliance with the minimum permissible cable bending radius.

In order to be able to carry out the installation and further maintenance work and to ensure sufficient ventilation, the u-remote station must be installed while observing the following minimum distances. Earth terminals already installed can be ignored when calculating the distance.

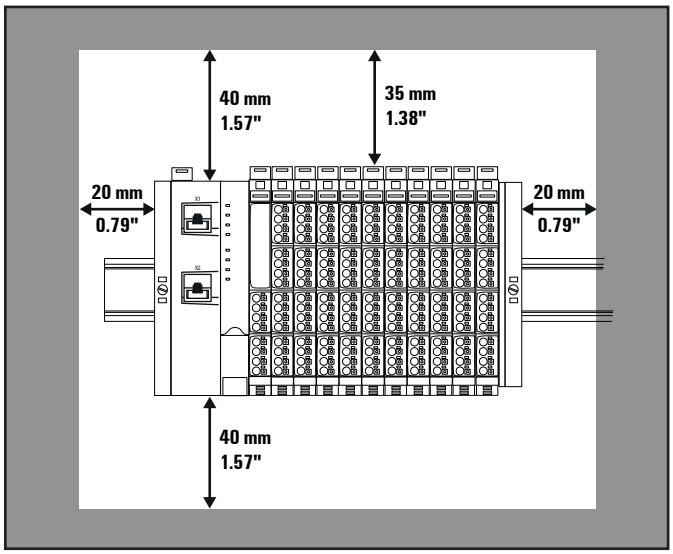

Minimum distances with horizontal installation

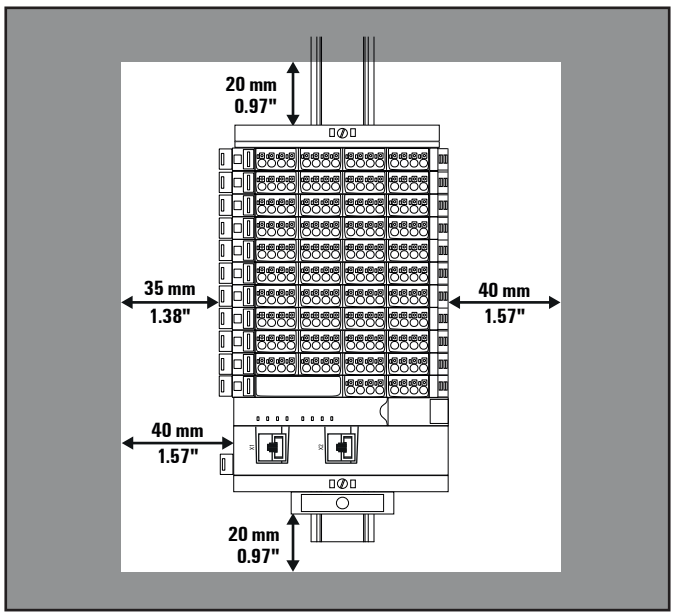

Minimum distances with vertical installation

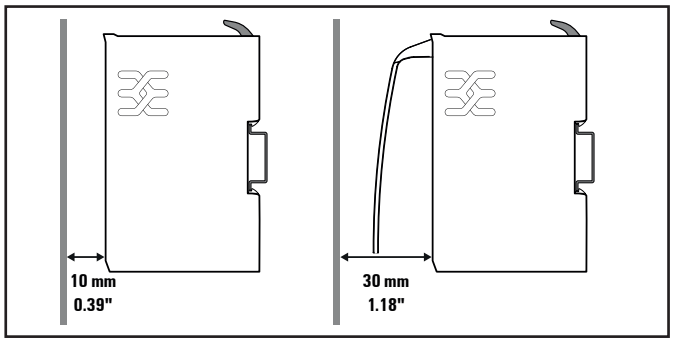

Minimum distance to switch cabinet door (with/without swivel marker)

Calculation of space requirements

The space requirements for a u-remote station with n modules (**horizontal installation**) is calculated as follows:

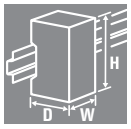

Height:	120 mm (4.72″)	
	+ 2 × 40 mm (1.57″)	distances at top and bottom
	= **200 mm (7.87″)**	
Width:	8 mm (1.57″)	end bracket
	+ 52 mm (2.05″)	bus coupler
	+ n × 11.5 mm (0.45″)	n modules
	+ 11.5 mm (0.45″)	end plate and end bracket
	+ 2 × 20 mm (0.79″)	distances to the sides
	= **111.5 mm (4.39″) + n × 11.5 mm (0.45″)**	

For **vertical installation** interchange height and width. When calculating the width, 4.5 mm for the must be added for the end bracket MEW 35/1 (Item No. 1805610000).

Installation sequence

A u-remote station may only be installed in this sequence (starting from the left/bottom):

- End bracket
- Bus coupler
- Up to 64 active modules
- End plate and end bracket

If the station has already been configured, please proceed to the corresponding installation drawing. If you are configuring the station yourself, please observe the following instructions:

- Observe the maximum current carrying capacity (see section 4.7)!
- Furthermore, the modules may be arranged in any sequence. In order to configure the station as clearly as possible, we recommend arranging the modules according to their function.

Arrangement of safe power-feed modules

A safe power-feed module (PF-O-xDI-SIL) can be positioned anywhere in the u-remote-station. All of the following output modules up to the next PF-O module will be safely disconnected (safety segment). Multiple safe power-feed modules/ safety segments can be set up in a single station.

When using u-remote safe power-feed modules, please also observe the **Modules for Functional Safety Manual**.
The manual is available to download from the u-remote website.

Preparation and the required tool

The DIN rail must already be installed. To mechanically install the u-remote station, you will need a 3-mm screwdriver.

- ► Lay out the modules in the intended sequence.
- ► Check whether the DIN rail feet can be moved on both end brackets. If necessary, loosen the mounting screw until the DIN rail feet can be moved freely.
- ► If not done yet, fit an earth terminal to the DIN rail.

7.2 Assembling the u-remote station

⚠ WARNING

Explosion risk!

► Prior to starting work, make sure that there is not a potentially explosive atmosphere!

⚠ WARNING

Dangerous contact voltage!

► All work on the u-remote station must be carried out with the power supply disconnected.

► Make sure that the place of installation (switch cabinet etc.) has been disconnected from the power supply!

ATTENTION

The product can be destroyed by electrostatic discharge!

The components in the u-remote series can be destroyed by electrostatic discharge.

► Please make sure that personnel and work equipment are adequately earthed!

Please note that for failure-free operation the end brackets delivered with the coupler have to be installed necessarily to achieve a permanent set of the u-remote station.

► On the left side of the installation site, place an end bracket on the DIN rail with the exterior of the bracket facing left and screw it down tightly (using a 3-mm screwdriver).

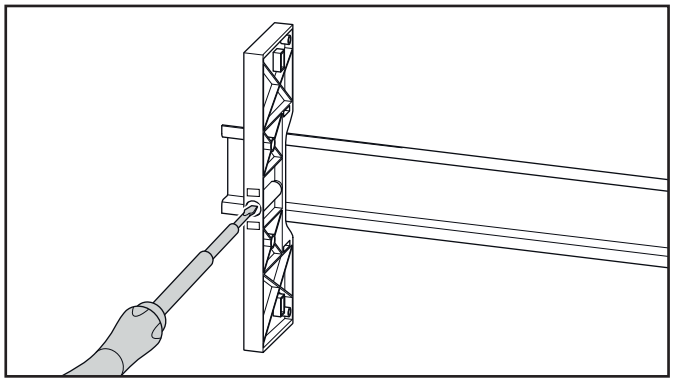

Attaching the end bracket

When installing the u-remote products, make sure that you listen for the double click:

1. When snapping onto the DIN rail
2. When pushing together with the neighbouring module.

The modules are in the correct position and the connection is made only when both snapping noises are heard.

ATTENTION

Improper installation may prevent earthing!

The earthing of the modules and couplers is only ensured if the FE spring at the bottom is in contact with the DIN rail.

► During installation, make sure that both release levers on the bus coupler and all release levers on the modules are closed before snapping onto the DIN rail.

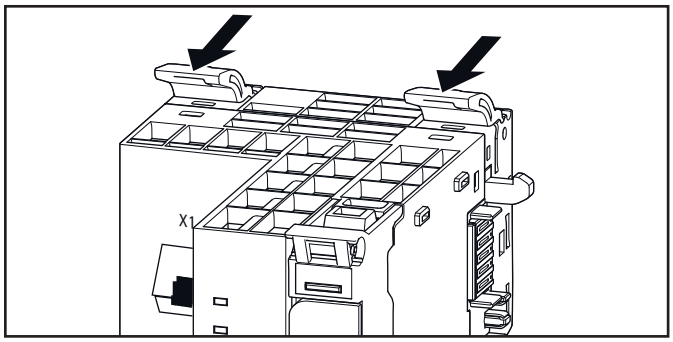

Release lever closed

► Place the field bus coupler (module side to the right) on the DIN rail so that it audibly clicks into place.

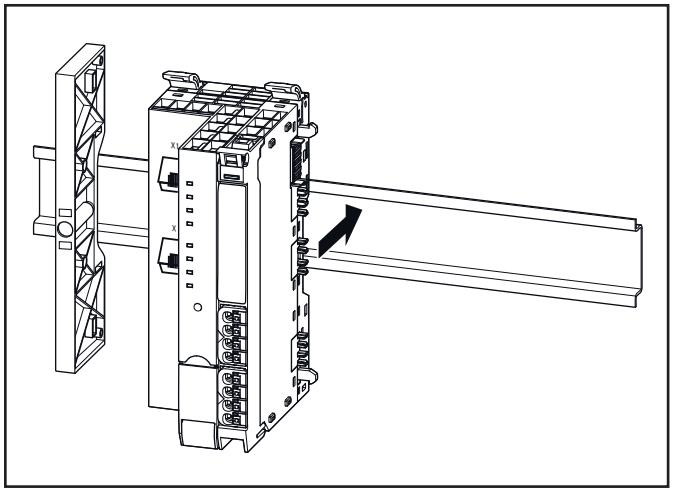

Attaching the bus coupler to the DIN rail

► Slide the bus coupler to the left until it completely connects with the end bracket. At the same time, press the bus coupler as close as possible to the DIN rail so that the coupler is not tilted.

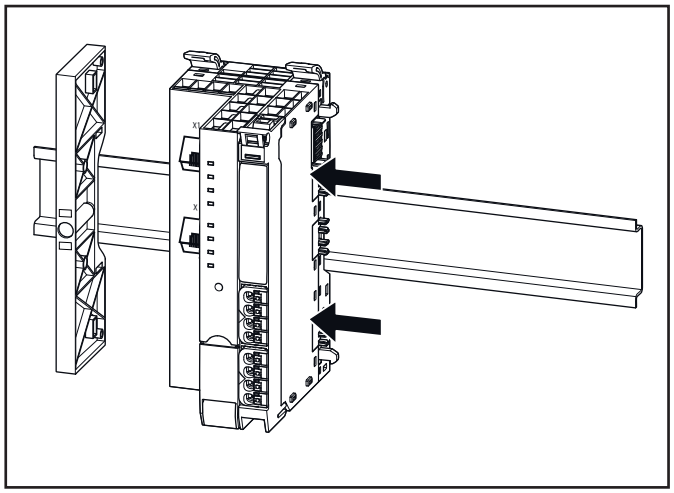

Sliding the bus coupler into position

► Place the first module on the DIN rail and press it down firmly. It must audibly click into place.
► Slide the module to the left until it audibly clicks into place on the bus coupler. At the same time, press the module as close as possible to the DIN rail so that the module is not tilted.

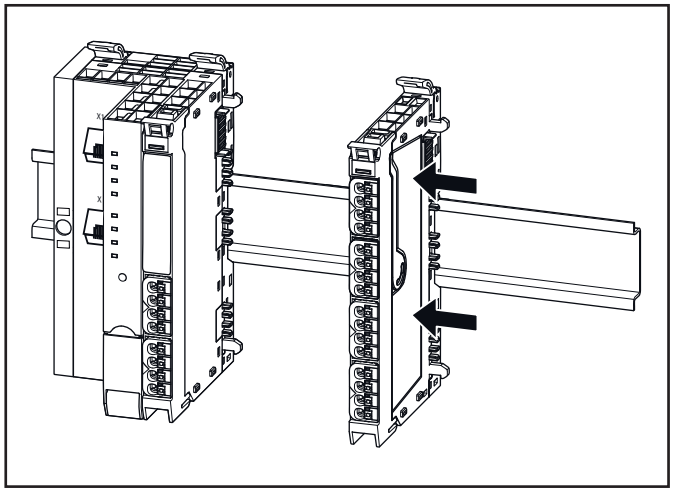

Sliding the module into position

► Attach all of the other modules as described above.

► Connect the second end bracket to the end plate as specified by the alignment pins.
► Place both parts on the DIN rail on the right-hand side of the station so that the end bracket faces outwards.
► Slide the end bracket and end plate to the left until it completely connects with the last module.

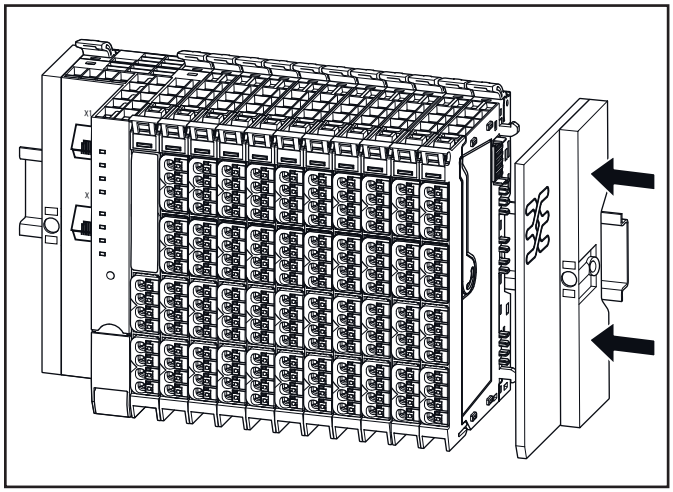

Sliding the end plate with end bracket into position

► Screw down the end bracket tightly (using a 3-mm screwdriver).
► Make sure that all release levers are in the locking position as standard. If this is not the case, click the open release lever into place.

7.3 Attaching the marker

Attaching the module marker

Each I/O module can be labelled at three points using the markers. This ensures clear allocation when replacing individual elements.

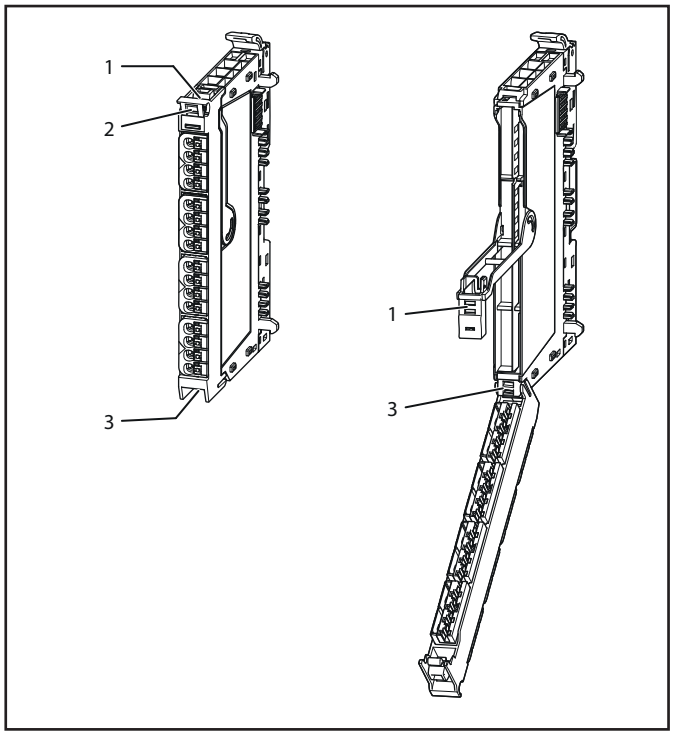

Three attachment points for markers

► Press the labelled marker into the corresponding fixture.

Attaching connection marker (connector PG 1.5 mm only)

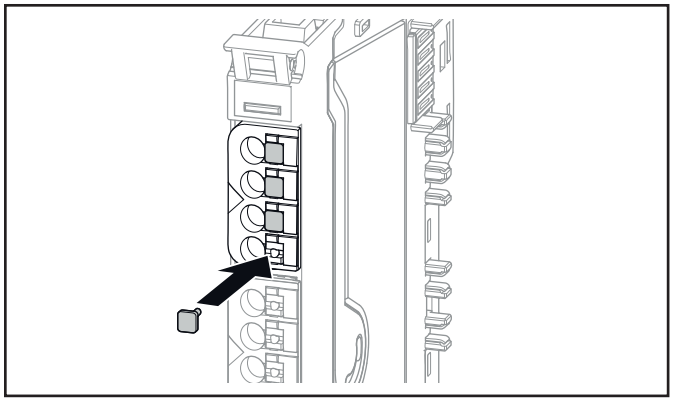

Attaching the connection marker

► Insert the labelled marker into the pusher for the connector.

Attaching the swivel marker

A swivel marker, available as an accessory (Item No. 1339920000), is best suited for making detailed markings on the connector frame.

► Snap the swivel marker into place on top of the module connector frame.

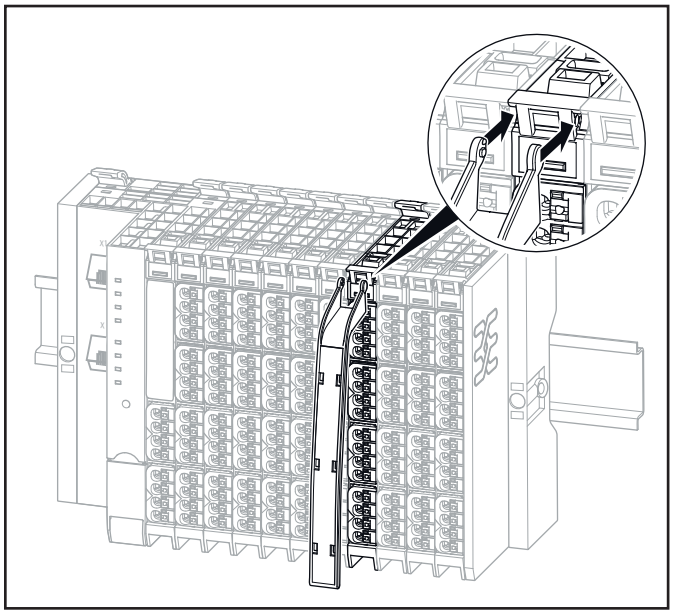

Attaching the swivel marker

► Insert the labelled marker into the swivel marker from below.

7.4 Coding the module

In order to prevent an electronic module being mismated, the modules can be coded by the customer. Coding is carried out by two small components: the orange coding socket and the black coding pin. Three codings can be applied to each basic module. Suggestions for the appropriate coding can be found in the annex.

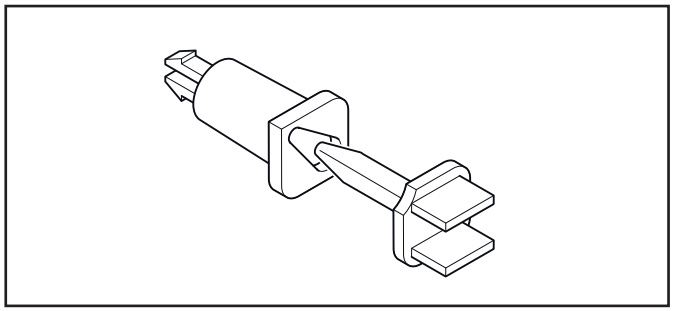

Coding socket and coding pin

- ► Open the connection frame and remove the electronic unit (see Chapter 7).
- ► Place the coding sockets (orange) in the coding ports on the inside of the basic module.

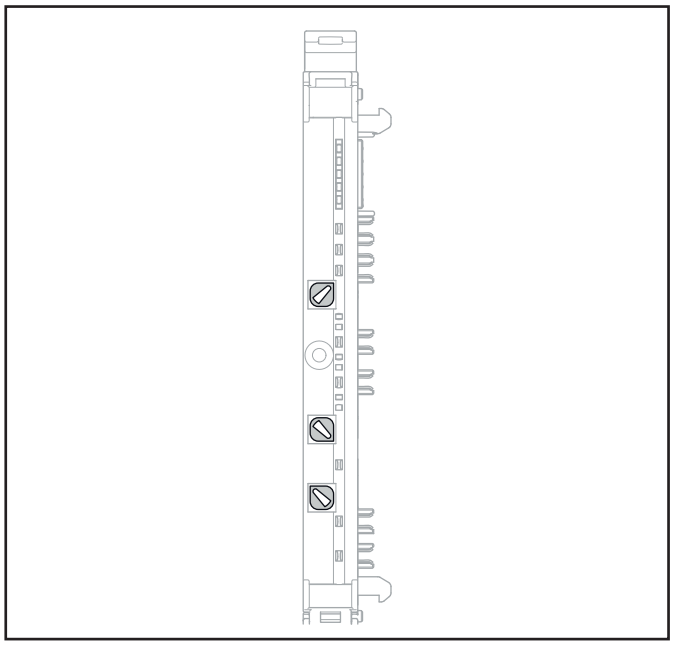

Basic module with inserted coding sockets

Each coding socket has one pointed and three rounded corners. The arrangement of the three sockets in the basic module allows for 4^3, i.e. 64, possible combinations.

- ► If necessary, you can rotate the inserted coding sockets into the required position using a 3-mm screwdriver.
- ► Insert a black coding pin to the stop in each coding socket.

A small orange corner will now be visible on each coding unit, which allows the coding state to be identified.

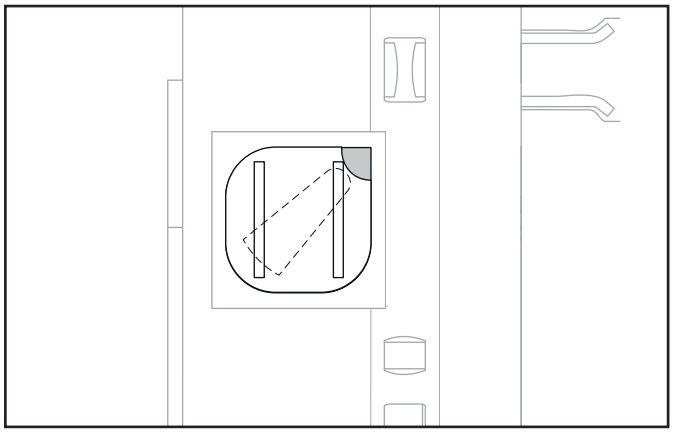

Coding socket with inserted coding pin

- ► Put the electronic module back into position.

The coding pin now engages securely in the electronic module. If the electronic unit has to be removed again, it can subsequently only be re-inserted back into the correspondingly coded basic module.

If the electronic module is replaced by a new module, this must be fitted with new coding pins.

7.5 Wiring

⚠ WARNING

Explosion risk!

- ► Before assembly, make sure that there is not a potentially explosive atmosphere!
- ► For applications in potentially explosive atmospheres, observe the installation and construction requirements of IEC 60079-7 and/or country-specific regulations.

⚠ WARNING

Dangerous contact voltage!

- ► Carry out assembly and wiring work on the u-remote station only when the power supply is disconnected.
- ► Make sure that the place of installation (switch cabinet etc.) has been disconnected from the power supply!

⚠ WARNING

Safety functions can be impaired!

When safe I/O modules or safe power-feed modules are installed in the u-remote station, please observe the following points:

- ► Please use wire-end ferrules in combination with flexible/multi-conductor cables to avoid cross-circuits.
- ► Ensure that for safety inputs in the configuration without test pulses the cabling prevents external short circuits (see DIN EN ISO 13849-2 Table D.4).

Once the u-remote station has been mechanically installed, the wiring can be carried out in accordance with the wiring plan.

Wiring of modules with connectors PG 1.5 mm

Only copper wires with a cross section between 0.14 mm² and 1.5 mm² (AWG 26 ... 16) may be connected.

We recommend using the following wire-end ferrules:

Cross-section	AWG	Weidmüller Item No. Weidmüller colour code	Weidmüller Item No. DIN colour code
0.14 mm²	26	9028240000	
0.25 mm²	24	9025760000	
0.34 mm²	22	9025770000	
0.50 mm²	20	9025870000	9019020000
0.75 mm²	18	9025860000	9019050000
1.00 mm²	17	9025950000	9019100000
1.50 mm²	16	0635100000	9019130000

Wire-end ferrules for the wiring

The external dimensions of the crimped wire-end ferrules must conform with IEC-60947-1. We recommend the following tools for crimping:

- – Crimping tool for wire-end ferrules from 0.25 mm² to 1.5 mm² (AWG 16 – 24) with a trapezoidal indentation crimp, type: PZ 6/5 ZERT (Item No. 9017900000)
- – Crimping tool for wire-end ferrules from 0.14 mm² to 0.75 mm² (AWG 18 – 26) with a trapezoidal crimp, type: PZ 1.5 ZERT (Item No. 9017310000)

u-remote modules (except HD modules) and bus couplers are equipped with the "PUSH IN" connector system. Single-strand and fine-strand lines with wire-end ferrules can be inserted without the need for a tool.

- ► Each cable must be the optimal length so that the bending radii observe the manufacturer's specifications.
- ► Strip the insulation from the lines to a length of approx. 10 mm ± 1 mm, even if you are using wire-end ferrules. If you use wire-end ferrules with plastic collars, strip the wires to 12 mm ± 1 mm.
- ► Connect all lines according to wiring diagram.

For the usage and handling of the "PUSH-IN" system, see Section 10.5.

Wiring of modules with HD connectors PG 0.35 mm

When using HD-connectors UR20-PG0.35 qualified wires with a cross section between 0.14 mm² and 0.35 mm² (AWG 26 ... 22) and a outer wire diameter between 1.0 and 1.6 mm (0.04 ... 0.06") can be connected by insulation displacement connectors (IDC). A list of SAI cables approved for the use with HD-connectors (Document-No. 1541020000) is available to download from the Weidmüller website. In the "Service" section of the u-remote website you will find a video tutorial showing how to assemble the HD connectors.

Required tools:

- multi-stripax 6-16 (Item No. 9202210000)
- Pressing tool PWZ-UR20-HD (Item No.1525820000)

When using HD-connectors UR20-PG0.35 always two HD connectors must be applied into one slot of the connector frame.

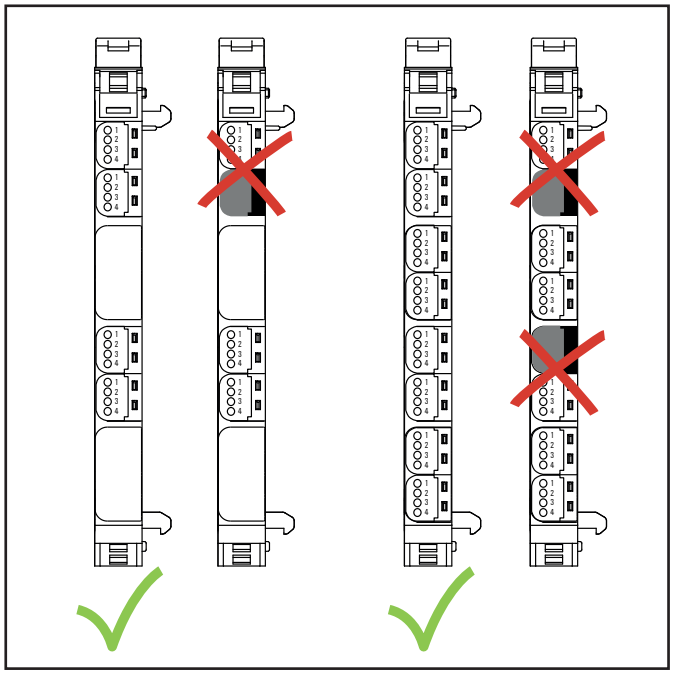

Application of HD connectors

- ► Each cable must be the optimal length so that the bending radii observe the manufacturer's specifications.
- ► Strip the insulation from the cable to a length of approx. 20 mm using the multi-stripax 6-16.
- ► Insert all wires according to wiring diagram as far as they will go into the clamping unit of the connector. Regard the marking (pin 1 to 4) on the transparent presorter.
- ► Apply the pressing tool and check whether all wires are inserted as far as they will go.
- ► Press the HD connector using the pressing tool.
- ► Insert the wired connector into the module's connector frame.

7.6 Insulation test

Insulation tests on the u-remote station have to be done according to the national regulations, in any case necessarily before each commissioning.

ATTENTION

The product can be destroyed by too high test voltage!

Please note during insulation test:

- within one channel the test voltage between 24 V and GND must not exceed 28,8 V![1)]
- A maximum test voltage of 500 V can be applied tho all other connection points.
- Up to 4000 V can be applied to the modules UR20-4RO-SSR-255, UR20-4RO-CO-255, UR20-4DI-2W-230V-AC and UR20-3EM-230V-AC:
  - between the four channels
  - between one channel and the system voltage.

1) We recommend to short-circuit 24 V and GND on all power supply connectors (fieldbus coupler, power-feed modules, safe power-feed modules and PLC-modules).

8 Earthing and shielding

The terms “earths” and “shields” are classified according to their relation to human safety or system safety. An earth is installed primarily to protect human life, and for this reason it is referred to as the protective earth (PE) conductor. A shield, on the other hand, serves to ensure the trouble-free operation of an electrotechnical system as well as electromagnetic compatibility.

The main differences between the two terms are therefore the electrical design and installation. A shield is not designed to transfer power, even though leakage currents can flow on it – something which must be avoided. In contrast, a PE conductor must be capable, at least in the short term, of discharging high residual currents (IEC 60947-7-2). The corresponding short-term current resistance of the PE connection must be 120 A/mm² of the connected cross-section. To make sure a shielding concept is able to work properly, the shield impedance must be 10 times larger than the impedance of the earth potential.

The following figure shows how these two topics relate to each other in application.

As shown in the figure below, the cable's shielding is connected to the earth potential so that the shield's current can be discharged. Depending on the sensitivity of the system, an attempt is made to create separate potential areas for this. However, it is still typical to mix the areas, i.e. the shielding has a common equipotential bonding (earth). This figure shows how the number of shields and PE conductors that need to be connected can increase quite rapidly (in this case only one component is used). The shielding and earthing systems must be planned carefully to provide adequate safeguards for personnel and equipment. The following sections describe the complexity and special characteristics in more detail.



Shielding



Earthing

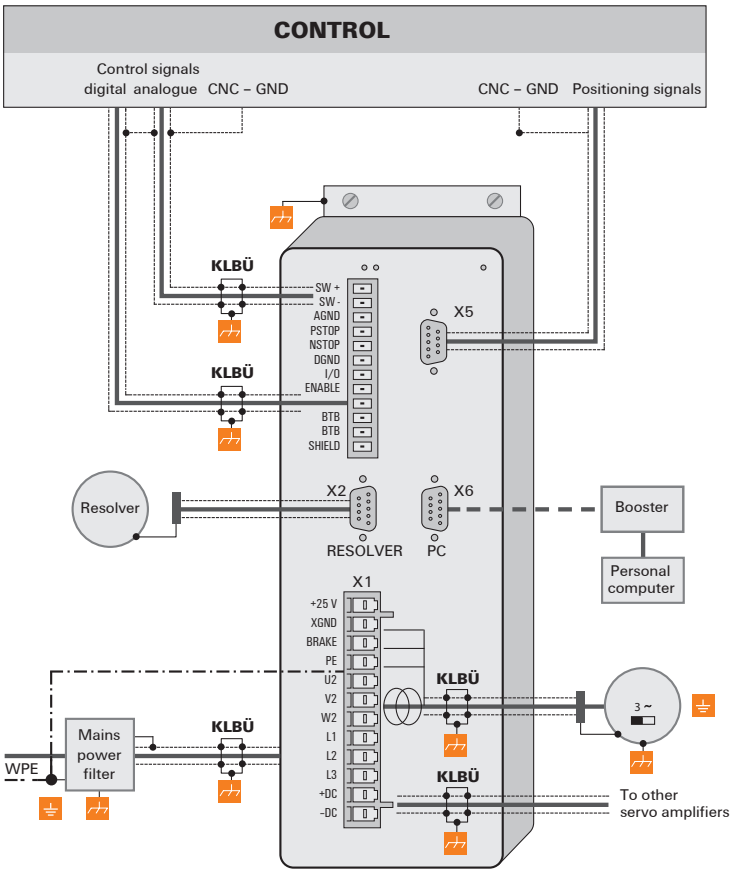

Connection diagram of a frequency converter

8.1 Earthing of shielded cables

Electrical and electronic systems must be designed such that they are largely safeguarded against electrical interference, thus enabling them to operate securely even in the case of transient interference voltages.

Electrical interference can be introduced into electric circuits in a variety of ways. The most frequent causes are due to inductive interference. In addition, galvanic and capacitive coupling as well as electrical fields and other processes are causes for interference voltages. Here, high-frequency voltage fluctuations – known as transients – are the cause of interference with a high level of effectiveness.

Shielded cables increase interference resistance

The sources of interference voltages can rarely be eliminated and even then not always completely. Thus, it is necessary to take measures to combat their effect. In general, the more effectively interference voltages can be kept away from circuit elements or can be discharged, the less electrical circuits are affected. This can be accomplished in a variety of ways with varying levels of effectiveness. A very effective measure, in particular for safeguarding against inductive effects, i.e. ensuring "electromagnetic compatibility" (EMC), is the shielding of electrically functional components to earth potential. In doing so, for instance, components are installed in metallic, earthed housings and the connecting lines are equipped with shielding.

In general, it can be said that interference from cables can be combated by routing cables as far away as possible from each other, keeping the common return as short as possible and using twisted-pair wire. Far better protection, however, is provided by completely shielding of all cables. This is the most effective measure that can be taken against the coupling of interference signals.

The best type of shielding consists of a braided mesh sleeve that uses individual wires made of non-magnetic materials (copper, aluminium). The braided mesh should be sufficiently large and also be as thick as possible. For cables that are equipped with foil shields, it is necessary to be aware of the low mechanical strength and the low current-carrying capacity of the shielding.

Proper use of shielded cables

The shielding of cables will only result in the desired effect if this is implemented properly. Incorrect earthing or the use of improper components that perform their task inadequately reduces or even totally eliminates the effect. Placing the shielding at any spot on the earth potential will not suffice, as this earth connection may have no effect on high frequencies. In addition, ground loops must also be taken into consideration. Furthermore, the shielding should be earthed over a large surface area. Beyond that, the quality of the shield conductor and earthing accessories is also important.



A Weidmüller clamping bracket (KLBUE 10-20 SC)
Order number: 1712321001

In practice, the shield is still often twisted and connected to a terminal point. There is very high attenuation (voltage drop) on these connections, especially for high-frequency interference. Therefore, this type of shielding should not be used, even for short cable lengths. The shielding of the cable is practically negated and can, at best, be helpful for low-frequency interference. We recommend that there is a large amount of surface contact with the braided shield of the cable.

There are generally four distinct types of coupling:

- Galvanic coupling
- Capacitive coupling
- Inductive coupling
- Radiation coupling

These types of interference usually occur mixed together, but they can be categorised as follows:

- Electromagnetic fields
- Ripple voltage (50 Hz)
- Lightning
- Interference pulses (current, voltage)
- Transient surge voltages
- Radio interference
- ESD (electrostatic discharge)
- Burst
- Mains feedback



Another area of concern as regards shield contact is the “flow” within the conductor. Temperature changes caused by the current lead to changes in the conductor cross-section. A rigid contact can therefore only be partially effective. A self-adjusting contact is what is really required. Weidmüller's clamping bracket products (KLBÜ series) provide the perfect solution to meet this challenge.

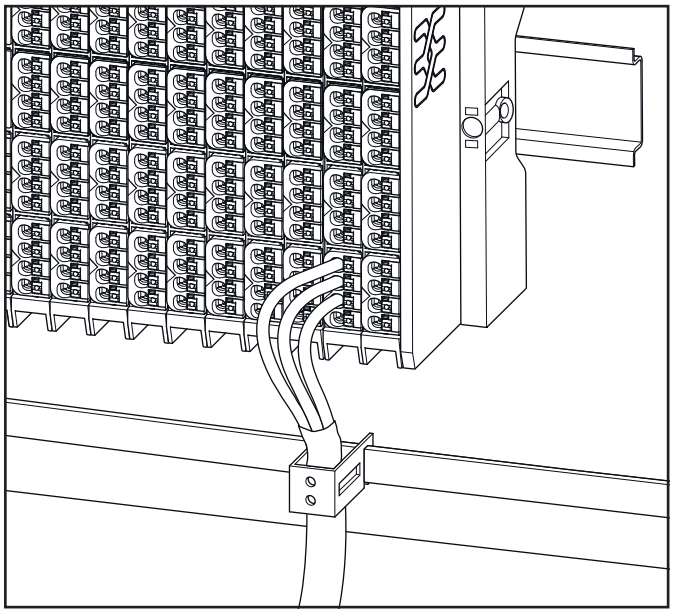

Use of a clamping bracket

Effective shielding

It is important that the shielding is not positioned on the earth of the connected component, but on the protective earth. In the case of components that are installed in a metal housing, the shielding must be positioned to this housing. If no earthed housing is available, the shielding is positioned on a separate earth.

When installing ground connections on shielding, it is generally also important that no earth loops are created. The smaller the earth loop, the less the danger of the induction of interference voltages. It is therefore most suitable to have a purely neutral-point installation.

The following sketches show the possible shielding connections to protective earth.

A one-sided connection of the shielding protects against capacitive coupling of interference voltages.

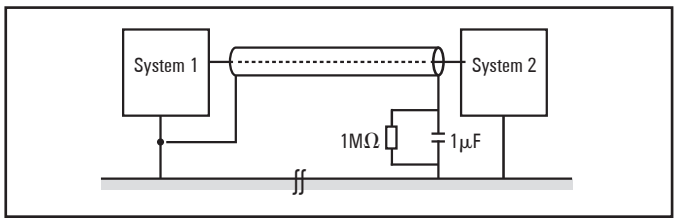

If you use a two-sided shielding connection, make sure that compensating current (different earth potentials) does not flow through the cable shield.

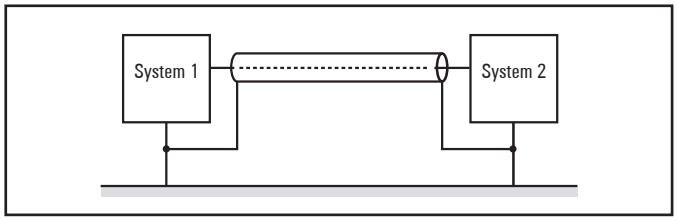

If you wish to avoid the disadvantages associated with creating an earth loop with two-sided shields, it is recommended you connect one side of the shield through a high impedance.

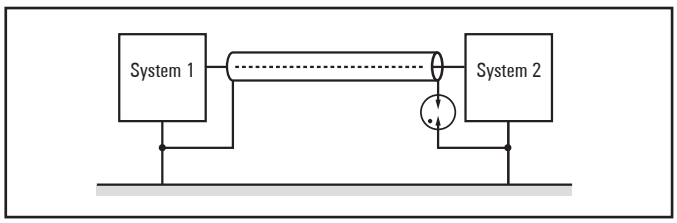

For longer lengths of shielded cables, such as if a sensor must be added to a control panel, a potential difference between both end points must not be ignored.

However, such shield conductors are relatively expensive and also require more time in working with them. Another possibility would be to place an additional voltage equalising cable between the measurement location and the control panel. The shield can then be hooked up on both sides.

A high-impedance earth connection is also another option. In the control panel, the shield is then connected to the earth potential, and the shield has a high-impedance connection to earth at the measurement location via a gas discharge tube. This solves the problem of a potential transfer and 50-Hz humming.

For non-isolated measurement locations, two gas discharge tubes must be installed. One connects the shield to earth, and the other connects it to the non-isolated measurement location. This method prevents a galvanic coupling between the measurement circuit and the earthed measurement location.

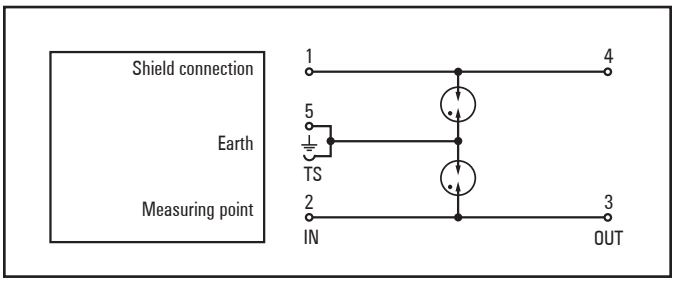

Summary

Earthing is a key element for the reliable functioning of an electrical system in the event of interference. In this regard, HF-related aspects must be taken into consideration. Only the proper use of materials and a well thought-out circuit design will lead to success.

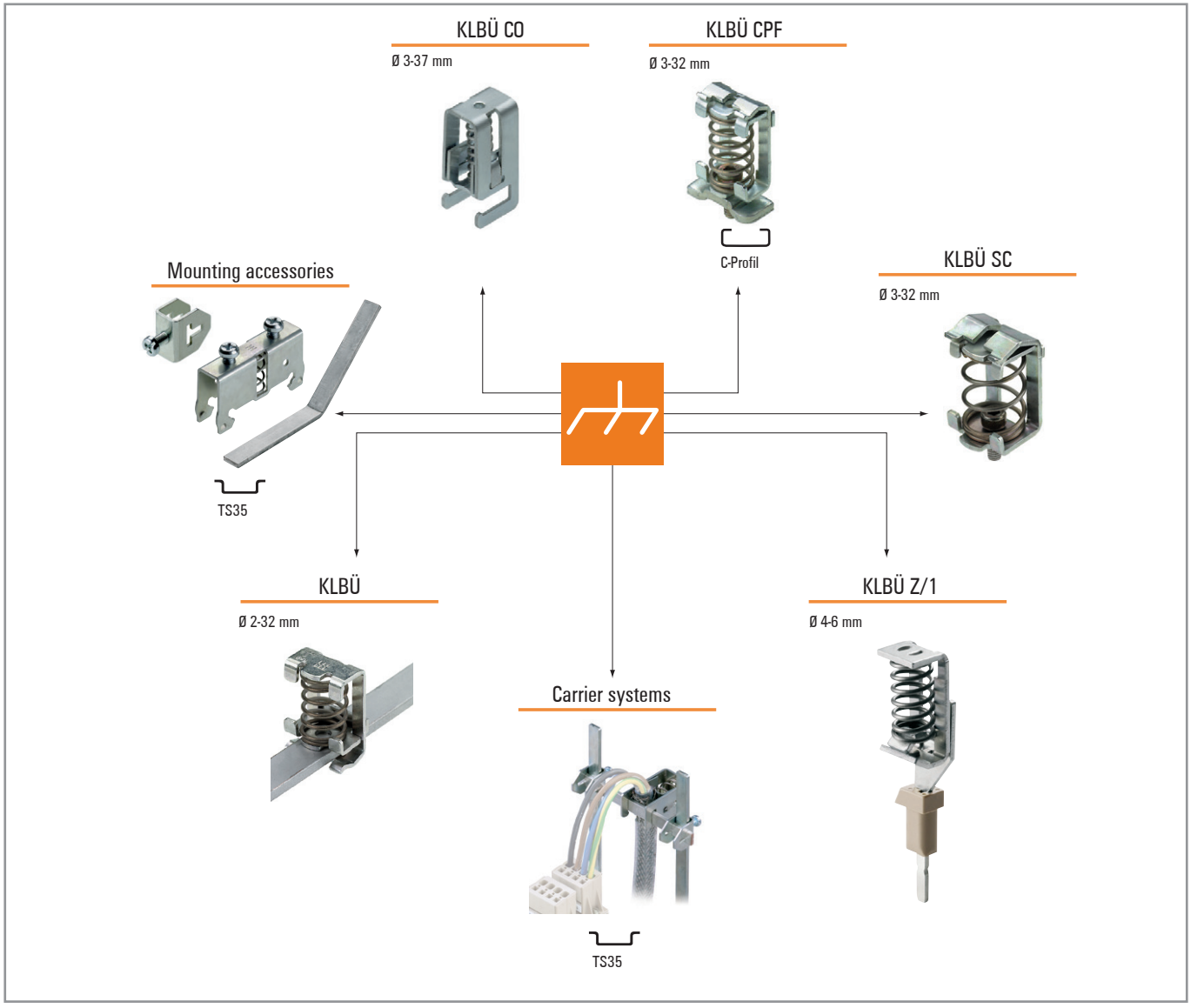

Overview of the product line for shielding connections



Please refer to our Modular Terminals Catalogue for more information. Item No. 1282250000

8.2 Potential ratios

Basic aspects

As regards the potential ratios of a u-remote system, the following aspects must be kept in mind:

- The power supply of the coupler and I/O modules as well as field power is provided via the power supply at the power-feed module (PF)
- A potential-free design is made possible through the use of an isolated power supply at the system power supply and the field power supply

The block diagram shows the typical design of a u-remote system. The power supply concept here makes sure that, starting with a certain capacity utilisation, power refresh is implemented using power-feed modules.

Potential-free design

In a potential-free design, the reference potentials of control and load circuits are galvanically isolated from each other.
A potential-free design is necessary for the following:

- Use of the power-feed module (in both the PF-I and PF-O variants), i.e. in all AC load circuits
- DC load circuits that cannot be coupled

Potential-free installation depends on the type of earthing.

Non-isolated design

In a non-isolated design, the reference potentials of control and load circuits are galvanically connected to each other.

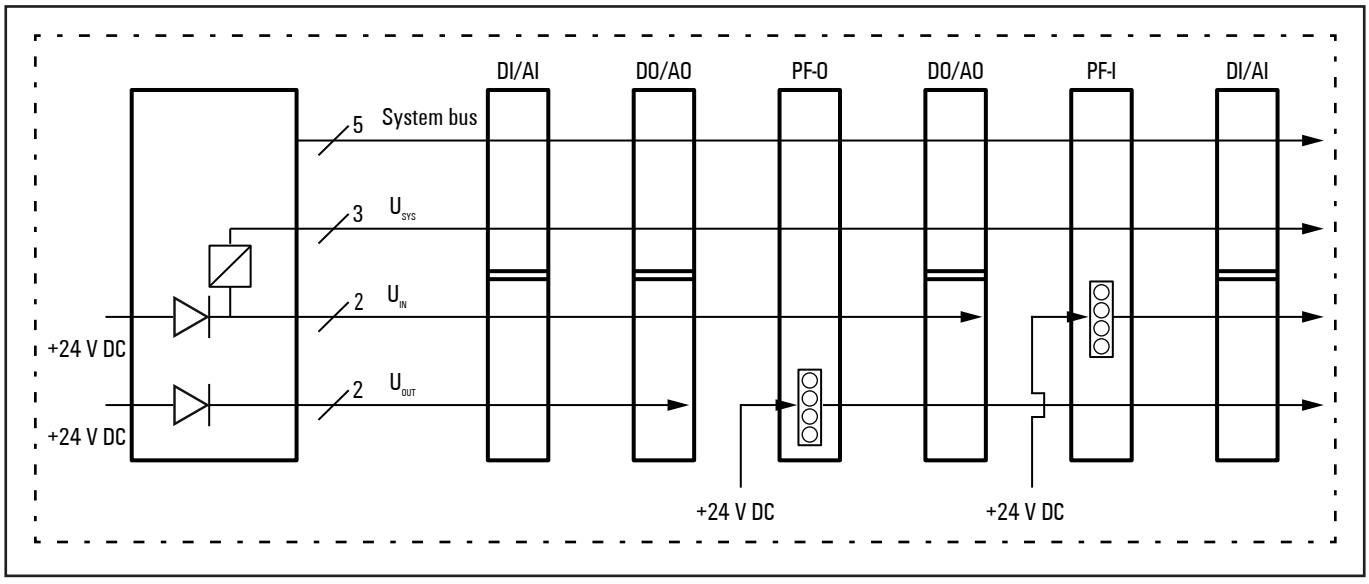

u-remote power supply concept

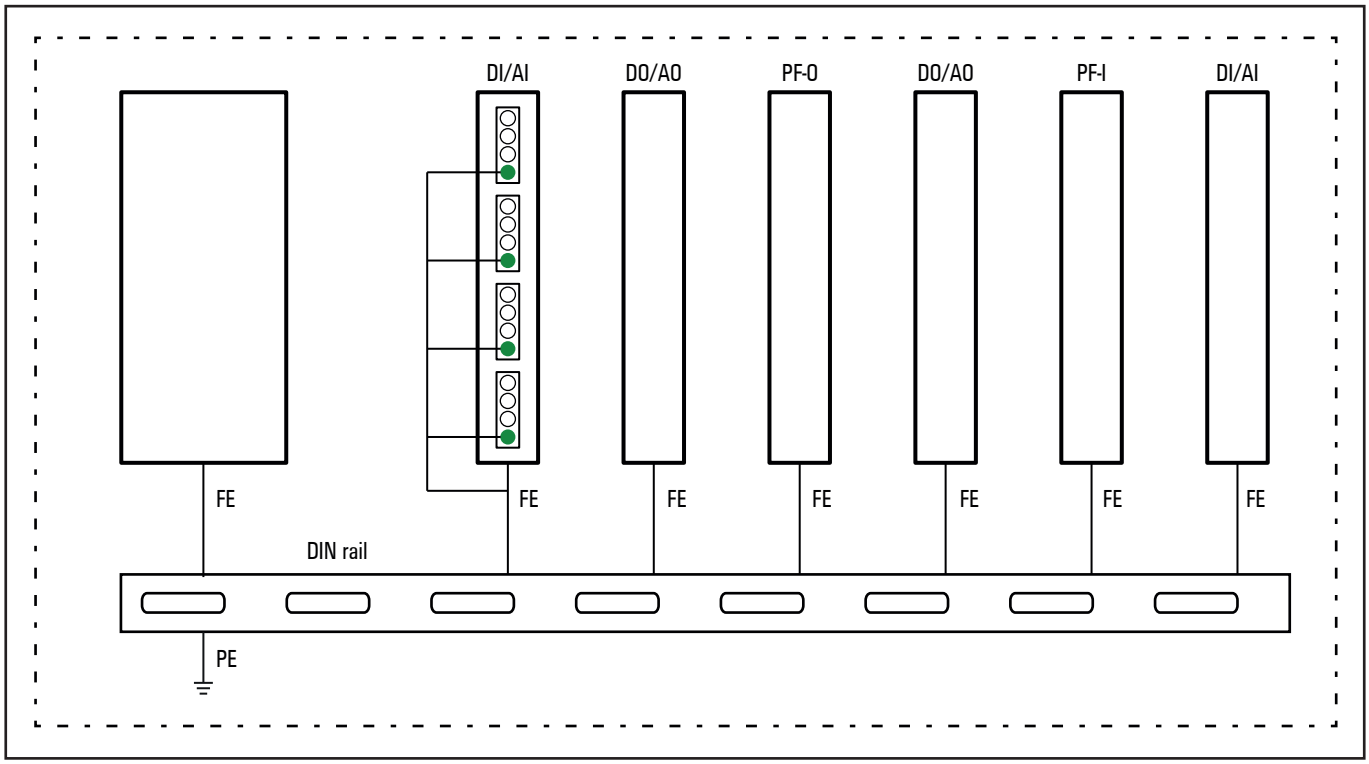

u-remote earthing concept: The spring contacts underneath the module and the coupler snap into the DIN rail to make a connection.

8.3 Electromagnetic compatibility (EMC)

u-remote products completely meet EMC requirements. EMC planning, however, is necessary prior to installation.

Aspects to consider include all potential interference sources such as galvanic, inductive and capacitive couplings, as well as radiation couplings.

Ensuring EMC

To ensure EMC, the following basic principles must be observed during installation of the u-remote modules:

- Proper, extensive earthing of inactive metal parts
- Correct shielding of cables and equipment
- Proper layout of wires – cabling
- Creation of a uniform reference potential and earthing of all electrical equipment
- Special EMC measures for special applications (e.g. frequency converters, servo drives)
- Contactors and relay coils must be equipped with the corresponding interference suppressors
- Devices and functional units with high interferance potential should be encapsulated if neccessary

Earthing of inactive metal parts

The earthing of all inactive metal parts reduces the influence of coupled interference. For this purpose, all inactive metal parts (such as switch cabinets, cabinet doors, support beams, mounting plates, DIN rails, etc.) must be connected to each other over a large surface area with low impedance, whereby a uniform reference potential is ensured for all control unit elements.

Required measures:

- Removal of the insulating layer around screw connections. Protection of connection points against corrosion
- Connection of moving earthed components (cabinet doors, separated mounting plates, etc.) through short earthing straps with large surfaces
- When possible, avoid using aluminium parts, because aluminium oxidises easily and in this respect is unsuited for earthing

PE connection

The connection from earth to the PE (protective earth) connection must be done centrally.

⚠ WARNING

Possible danger to life!

In the event of a fault, the earth must never take on a dangerous contact voltage, which is why it must be connected to a PE conductor.

Unearthed operation

In the event of unearthed operation, the corresponding safety regulations must be observed.

DIN rails

Notes concerning the use of DIN rails:

- Large-surface, low-impedance attachment on the mounting plate and corresponding contact with the carrier system using screws or rivets
- Proper earthing
- Use corrosion-proof DIN rails
- Remove the insulating layer on painted, anodised or insulated metal components in the area around the connection point
- Protect the connection point against corrosion (e.g. using grease; Attention: only use grease suitable for the purpose)

Sensor and actuator lines

To avoid antenna effects caused by looped lines, all lines that go to a certain sensor or actuator should be combined in one cable.

Cabinet design according to EMC guideline:

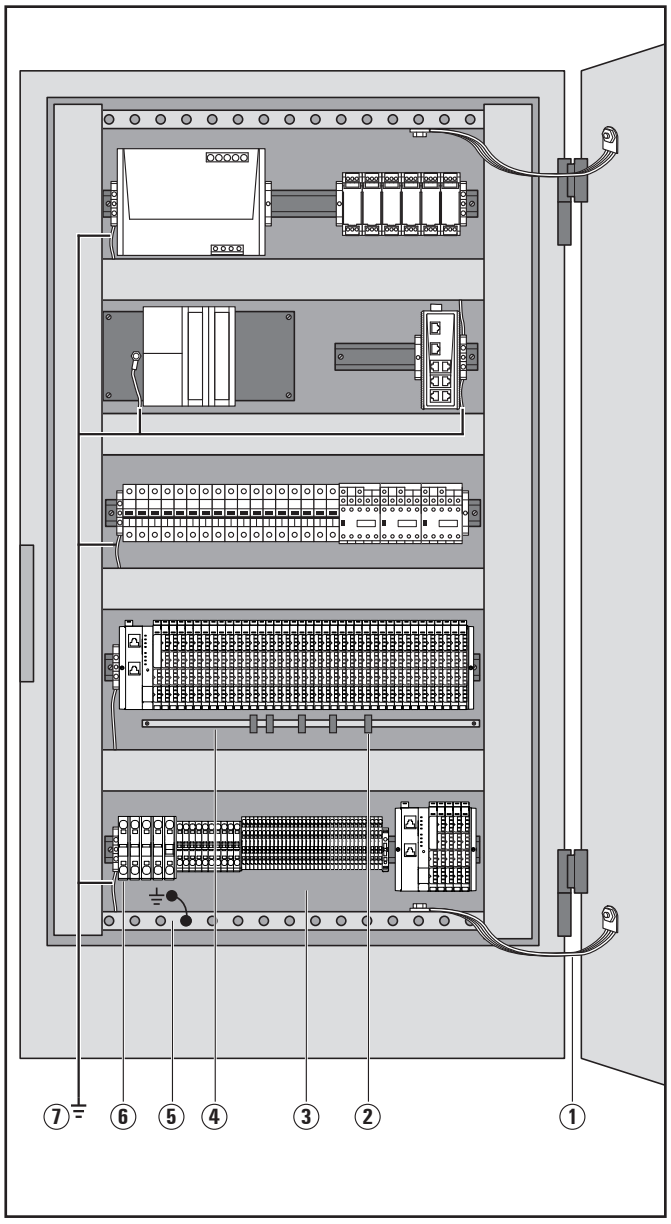

1 Earthing strips
Earthing strips must be used for connecting inactive metal parts if it is not possible to connect two large pieces of metal. Use short earthing strips with large surfaces.

2 Clamping bracket for signal cables
If shielded signal cables are used, the shield must be attached to the clamping bracket (KLBÜ series) on the busbar over a large surface. The braided shield must cover and make good contact with a large part of the clamping bracket.

3 Mounting plate
The support beam for holding control components must be connected to a large part of the cabinet housing.

4 Busbar
The busbar must be connected via the rail holding fixture. The cable shields are fixed to the busbar.

5 Protective earth conductor rail
The protective earth conductor rail must likewise be attached to a large part of the mounting plate, and it must be connected to the protective earth conductor system via an external cable with a cross-section of at least 10 mm^2, in order to discharge interference current.

6 Protective earth terminal strip
The protective earth terminal strip must be connected to the protective earth conductor rail in a neutral-point configuration.

7 Cable to protective conductor system (earthing point)
The cable must be connected to a large part of the protective conductor system.

See also:
EMC Directive 2014/30/EU

8.4 Shielding of cables

To prevent the coupling of interference voltages and the de-coupling of interference fields in cables, only shielded cables made from well-conducting material (copper or aluminium) with braided shielding and a coverage of at least 80 % should be used in the design of a cable shield.

Only when a cable shield is connected to the local reference potential on both sides is it possible to achieve optimal shielding against electric and magnetic fields. Exceptions are possible, for example, with high-impedance, symmetrical or analogue signal cables. If a shield is attached on only one side, this merely achieves an isolation against electric fields.

ATTENTION

Material damage!
Requirements for effective shielding design:
- The shield connection to the shield bus should be low impedance
- The shield must be connected directly at its entrance into the system
- Keep cable ends as short as possible
- Do not use cable shields for equipotential bonding

When connecting a data cable using a sub-D connector, the connection must be made through the connector's shield collar and never through pin 1.

The data cable's shield must be attached to the shield bus with the insulation stripped away. The shield is to be connected and attached with clamping brackets or similar metal fixing devices. The shield bus must be connected to the reference potential surface through a low impedance (e.g. fastening point with a separation of 10 to 20 cm). The brackets must surround and make contact with a large part of the shield.

Isolation of the cable shield should be avoided. Instead, it should be routed into the system (for example, the switch cabinet) up to the interface connection.

ATTENTION

Shielding of field bus cables
When shielding field-bus cables, the installation guidelines for the respective field buses must be observed. (See the websites of the field bus organisations.)

ATTENTION

Material damage!
If it is only possible to have a one-sided shield connection for reasons specific to the circuit or equipment, the second side of the cable shield can be routed to the local reference potential via a capacitor (with short connections). To prevent disruptive discharges when interference pulses occur, a varistor or a resistor can also be wired in parallel to the capacitor.

As an alternative, a doubled version (galvanically isolated) can be used, whereby the inner shield is connected on one side and the outside shield is connected on both sides.

Equipotential bonding

If system components are positioned separately from each other, potential differences may arise, provided that:

- Power is provided from different sources
- The earthing is implemented at different system parts, despite the cable shields being connected at both sides

A voltage equalising cable must be used for equipotential bonding.

⚠ WARNING

Possible danger to life!
The shield must not be used for equipotential bonding!

The following features are essential for a voltage equalising cable:
- In the case of cable shields on both ends, the impedance of the equalising cable must be considerably smaller than that of the shield connection (maximum 10 % of its impedance)
- When the length of the equalising cable is less than 200 m, its cross-section must be at least 16 mm^2 If the cable is greater than 200 m in length, a cross-section of at least 25 mm^2 is necessary.
- Large-surface connection with the PE conductor or the earthing and corrosion protection are requirements for long-term safe operation
- They must be made of copper or galvanised steel
- In order to keep the enclosed area as small as possible, the equalising cable and signal cable must be routed as close to each other as possible

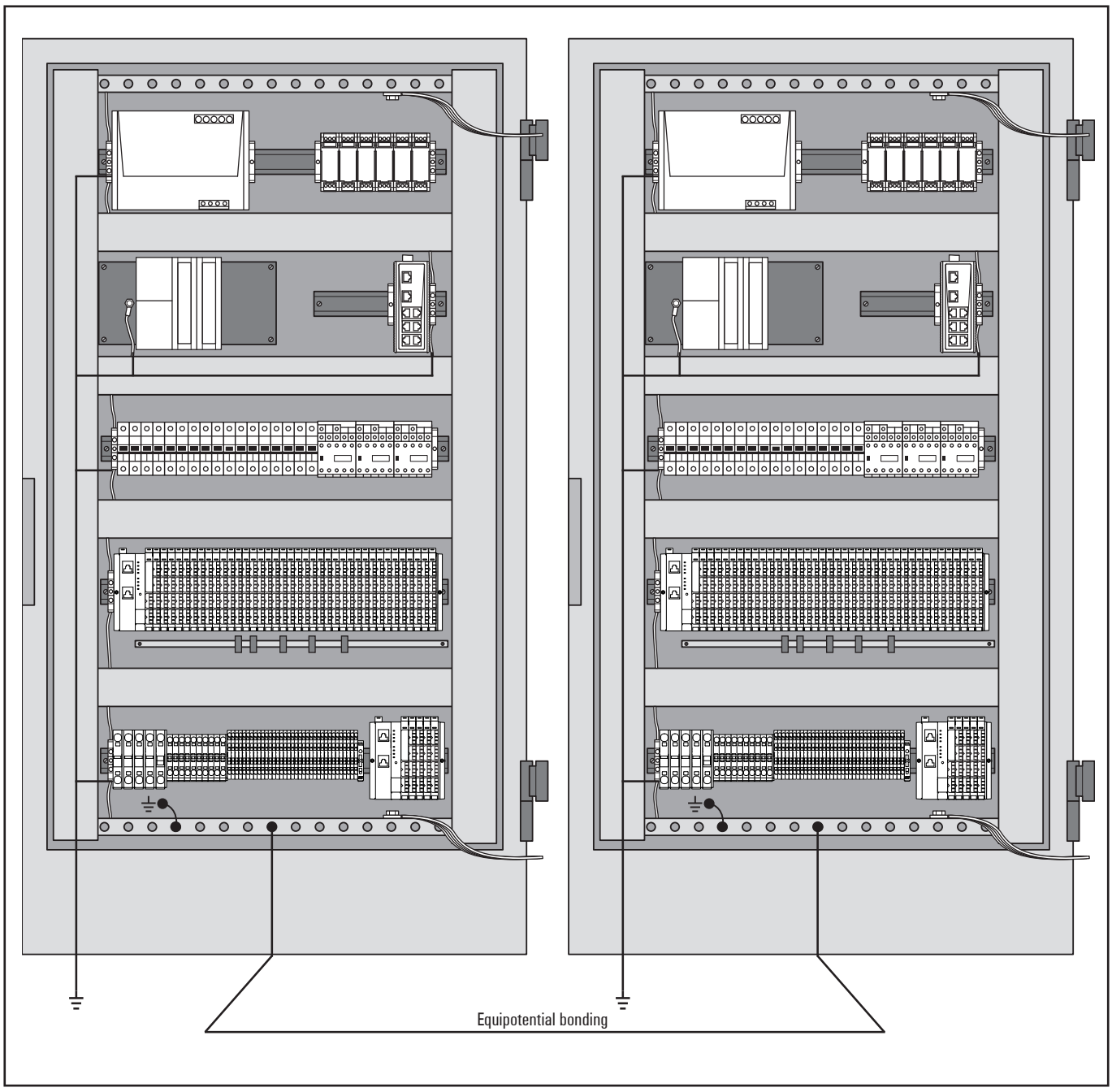
Equipotential bonding

9 Commissioning

⚠ WARNING

Explosion risk!

► Prior to starting work, make sure that there is not a potentially explosive atmosphere!

⚠ WARNING

Manipulation of the control unit!

During commissioning, the system may be manipulated to such an extent that can result in risks to life and material damage.

► Make sure that system components cannot start up unintentionally!

ATTENTION

Risk of product damage!

► Carry out an insulation test before each commissioning (see Section 7.6).

The procedures applied during commissioning depend on which control unit is being used on site. The descriptions in this chapter use commissioning with a PROFINET coupler and the Siemens SIMATIC Manager Step7 (from V5.5 SP2 on) as an example.

Please also observe the web server manual (Order No. 2112220000). You can find the document in the Weidmüller Support Center.

The factory settings of the login data are:
User name: admin
Password: Detmold

9.1 Requirements

Before you start the commissioning work, the following requirements must be fulfilled.

- The control unit must be in operation.
- The u-remote station must be completely assembled and wired up.
- The control unit and u-remote station must be connected via fieldbus, and a PC/laptop must also be connected.
- The power supply must be turned on.

If these requirements are fulfilled, the following LEDs light up:

- On the bus coupler
  - The PWR LED lights up green.
  - For the port to which the control unit is connected, the LINK LED lights up green and the ACT LED lights up yellow.
- On the modules, the Status LED lights up green.

9.2 Device description files

Downloading and installing files

► Download the device description files from the Weidmüller Support Center.

These include:

- GSDML files for PROFINET couplers
- GSD files for PROFIBUS couplers

If bitmap files for visualising the coupler are also supplied, store them in the same folder as the device description files.

Projects must not be open in the hardware configuration tool while the files are being installed!

► Close any open projects before installing the device description files!

► In the hardware configuration tool, open: **Extras/Install GSD files**.

► Select the directory in which you have stored the device description files.

The files available are displayed.

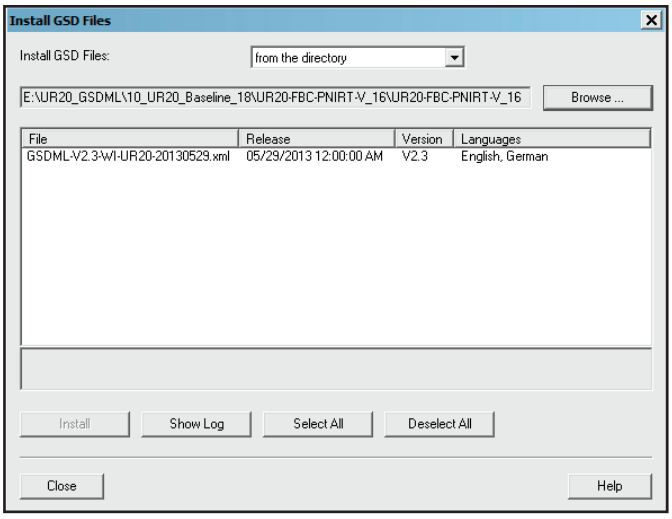

Selecting GSD files

► Select the files that you would like to install.
► Click **Install**.
► When the installation is complete, click **Close**.
► Update the device catalogue via **Extras/Update catalogue**.

The devices associated with the current device description file are now listed in the device catalogue.

Updating device description files

► Check whether you are already using the latest version.

With GSDML files (PROFINET) the date is visible in the file name: GSD_V2.3-WI-UR20-yyyymmdd.xml.
The version number of a GSDML file (PROFIBUS) is visible after opening the file with an editor. When using a GSD editor you will find the version number in the “Info_Text” entry. Using a text editor you will see the number in the preliminary comment.

► Download the latest GSD files from the Weidmüller Support Center.

9.3 Commissioning a PROFINET fieldbus coupler

► Start SIMATIC Manager.
► To set up a new project, click **File/New**.

The “New Project” window opens.

► Enter a name for the new project (e.g. UR20_Station1) and click **OK**.

The new project is displayed in SIMATIC Manager.

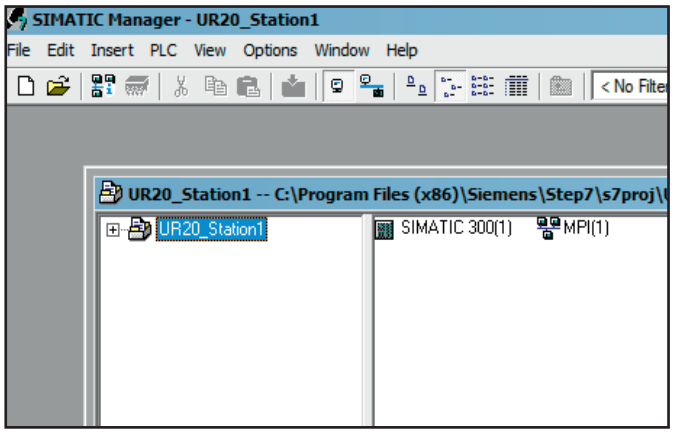

Creating a new project

Adding a control unit type

► Select the project in SIMATIC Manager.
► Select the control unit type VIA **Add/Station** (e.g. SIMATIC 300).

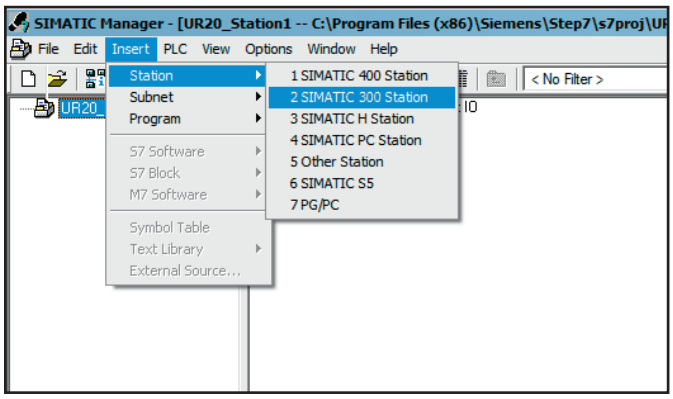

Adding a station

► Double-click on the project name so that the station (SIMATIC 300) is displayed below in the directory tree.
► Click on the station (SIMATIC 300).
► Double-click **Hardware** on the right-hand side of the window.

The “Hardware Configuration” window opens.

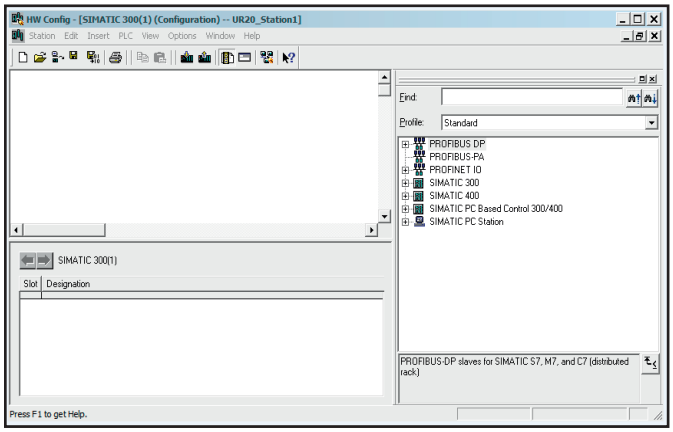

Hardware configuration

► The device catalogue is displayed on the right-hand side of this window. If this does not occur, open the catalogue via **View/Catalogue**.

Adding a profile rail

► In the catalogue, select the profile rail in use (e.g. SIMATIC 300/RACK-300).

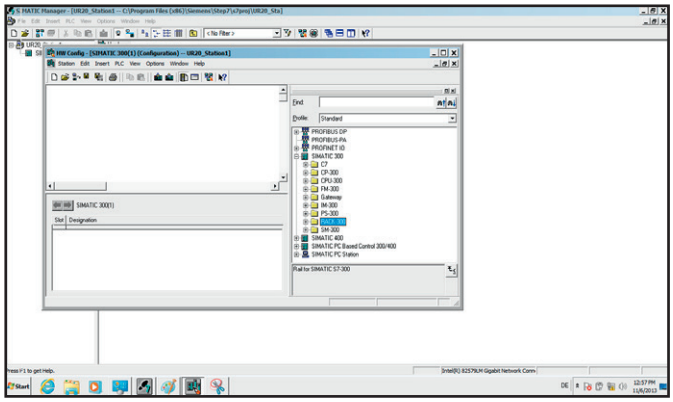

Selecting a profile rail

► Double-click on the profile rail or drag it to the left-hand side of the window using the mouse.

The profile rail (UR) is displayed with the open positions.

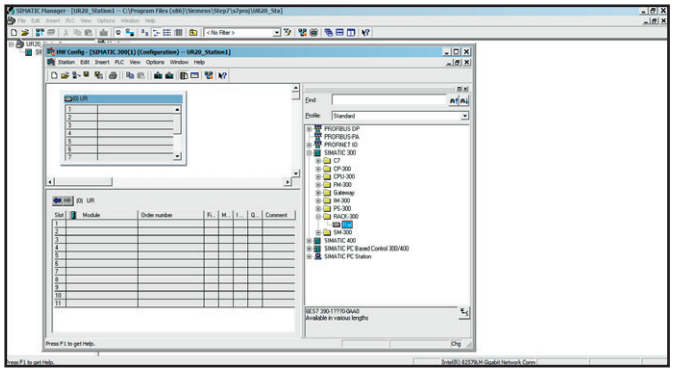

Profile rail with open positions

Selecting the control unit version

► Click on the second line of the **UR** table.

► From the catalogue, select the control unit in use and its version (inscription on the control unit, e.g. 317-2EK14- etc.).

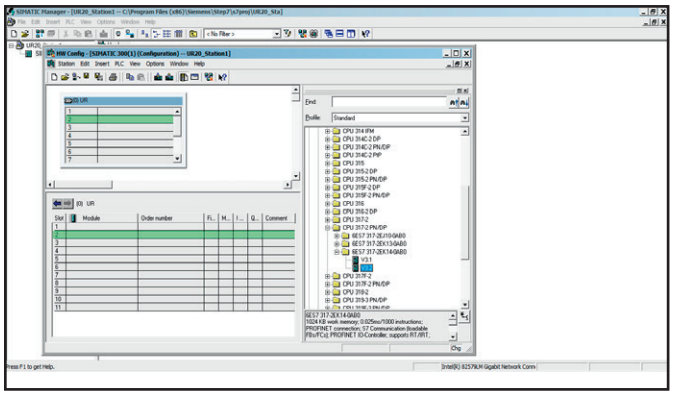

Selecting the control unit version

► Double-click on the respective version, or use the mouse to drag it to the second position in the table on the left-hand side of the window.

The **Ethernet interface properties** window opens.

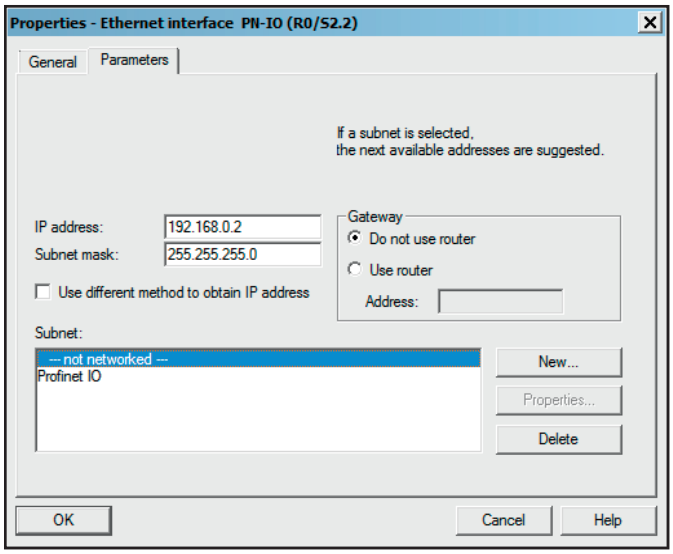

Ethernet interface properties

► Enter the designated IP address and the subnet mask.

► Click on **New**.

► Enter a name for the subnet (e.g. Ethernet UR20-S1). This name is assigned to the control unit.

► Click **OK** twice.

A network line which has the subnet name is now displayed in the configuration window.

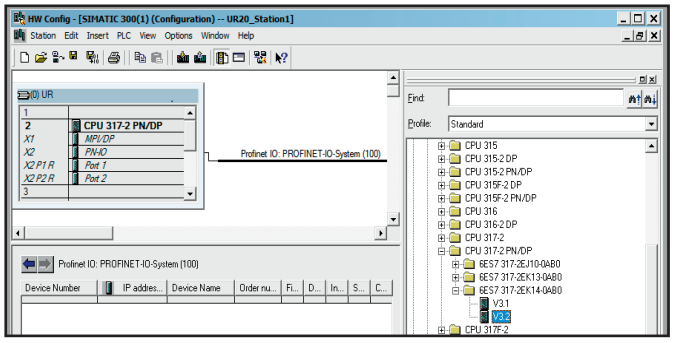

Ethernet configuration

Linking a bus coupler

► Click on the network line in the configuration window.
► In the device catalogue, select the bus coupler (UR20-FBC-PN-IRT) under **PROFINET IO/Additional field devices/ I/O /UR20 system**.
► Double-click on the coupler or drag it to the subnet line.
The coupler is added to the subnet.

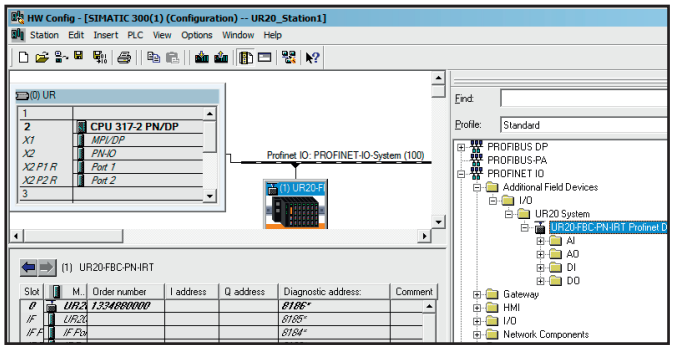

Linking the coupler

Providing the bus coupler with a device name

► Double-click on the bus coupler icon.
The **UR20-FBC-PN-IRT properties** window opens.

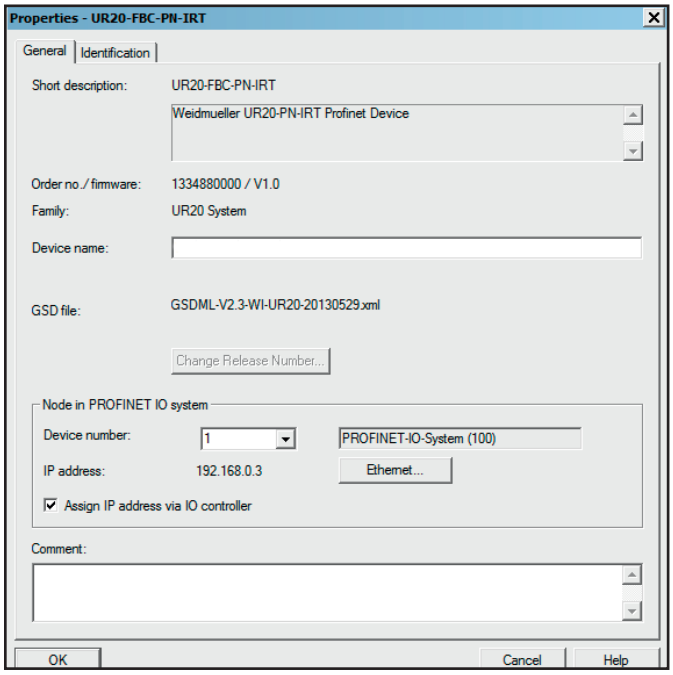

Bus coupler properties

The device is delivered with no device name defined.

► Enter the device name and click OK.

All settings only take effect once they have been loaded into the component/control unit (see below).

Providing the control unit with a device name

► Double-click on **PN-IO** in the upper window (UR).
The **Properties** window opens.

► Click on the **General** tab.
► Change the **Device names** as required.

All settings only take effect once they have been loaded into the component (see below).

Adding modules

Only active modules can be added. All modules that do not communicate (AUX, PF power-feed modules and ES empty slot modules) are not listed in the device catalogue.

► In the hardware configuration tool, click on the icon for the UR20-FBC-PN-IRT bus coupler.

The list of components is listed in the lower part of the window.

► In the list of components, click in the first free line.
► Navigate to the device catalogue and select the first module you would like to add (corresponding to the first module in the u-remote station).
► Double-click on the module, or drag it into the configuration list.

The module is displayed in the list of components.

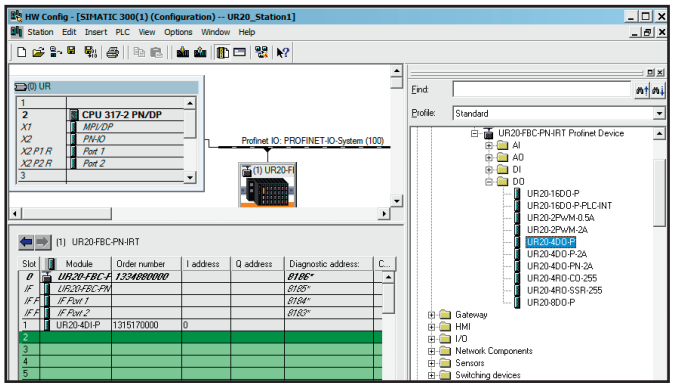

Adding modules

► The same method can be used for any additional modules be installed in the station.

Removing a module

► To delete a module from the list, select the module and click **Edit/Delete**.

or

► Using the right mouse button, click on the module in the list and select **Delete**.

Setting module parameters

A wide range of parameters can be edited for some modules.

► Navigate to the list of components and click on the module.

The **Parameters - Module XY** window opens.

► Select the **Parameters** tab.

A list of all module parameters is displayed.

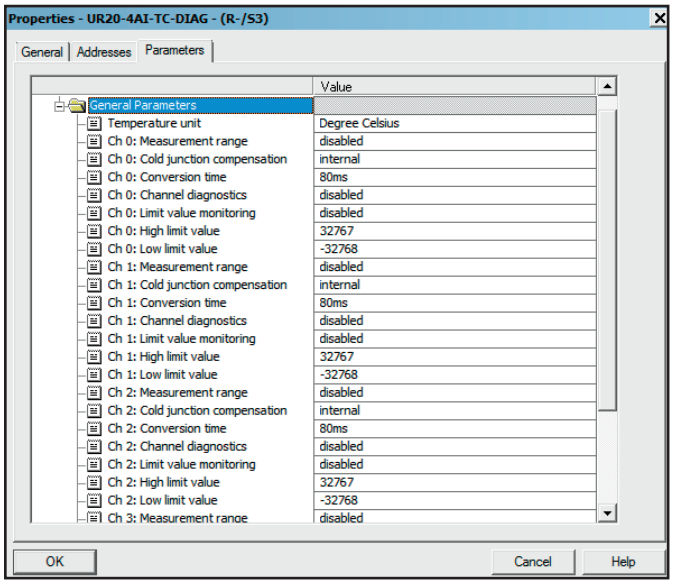

Editing module parameters

► Click on the parameter that you would like to change and amend the setting as required.
► Use this method to edit all of the parameters that you would like to change.
► Save the settings by clicking on **OK**.

All settings only take effect once they have been loaded into the component (see below).

Setting the properties of the Ethernet participants

To allow communication with the Ethernet participants, the device names and IP addresses of the participating devices must be defined.

► Navigate to the device manager and select **PLC/ Ethernet/Edit Ethernet Node**.

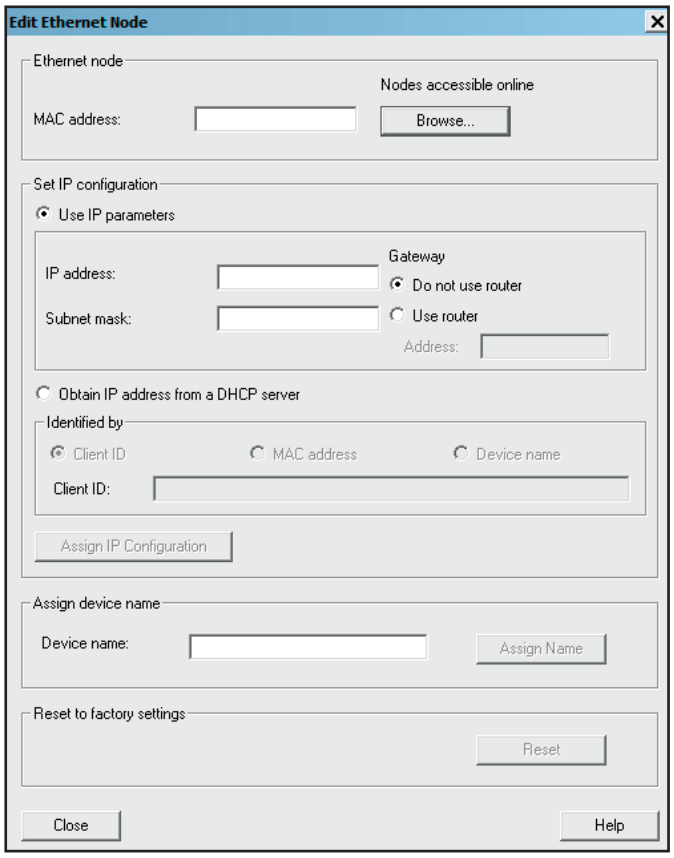

Searching for Ethernet participants

► Enter the MAC address of the participant or click on **Browse** to look for all connected participants.

The connected participants are displayed.

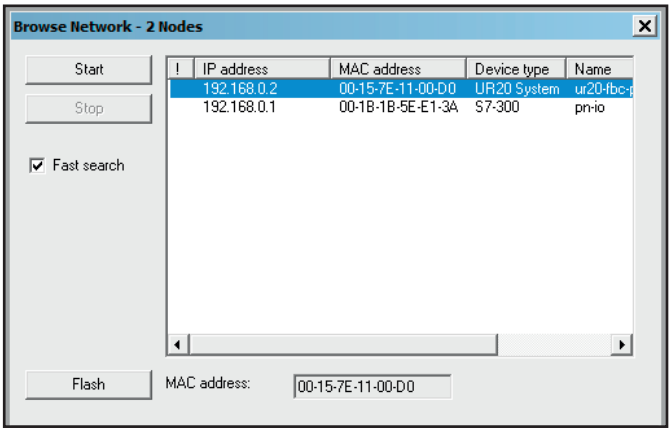

Ethernet participants found on the network

► To identify a participant at the station, click on **Flash**.

The data-transfer LED on the identified device now flashes.

► To stop the flashing, click on **Stop flashing**.

► Navigate to the list of participants and click on the one you would like to edit.

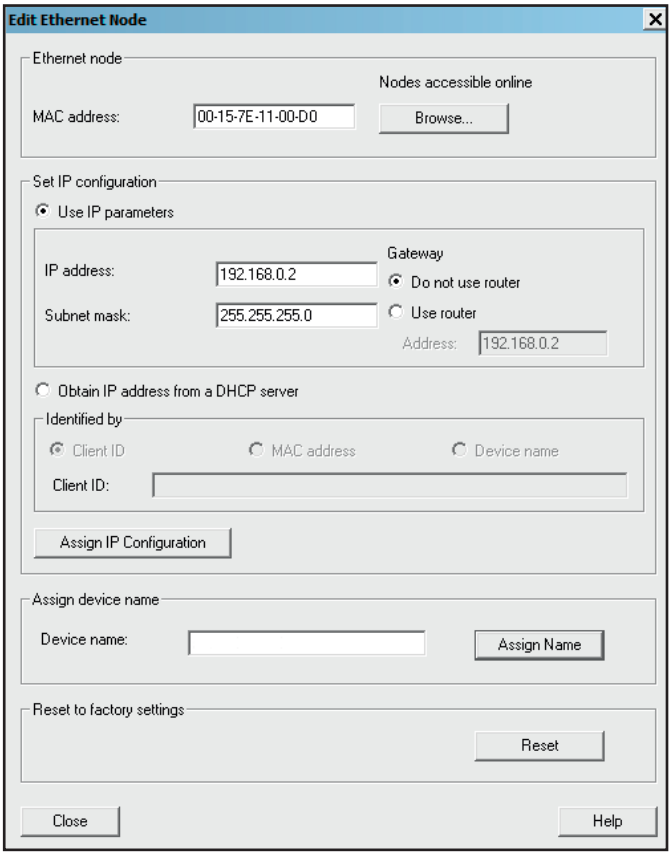

Editing Ethernet participants

► Change the **IP address** and **subnet mask** as required and click on **Assign IP configuration**.
► To assign the **device name**, enter the name and click on **Assign name**.
► If you would like to change the properties of other participants, click once again on **Browse** and select the next participant.
► Make the changes as described above.
► When you have finished editing all of the participants, click on **Close**.



These settings are sent directly to the devices!

Saving the configuration

You can save your project in the hardware configuration tool at any time and continue working on it at a later point in time. There are two ways to save the settings you have made:

– Click **Station/Save** to save the configuration in its current state. Use this function if you would like to stop working for a short period of time.
– Click **Station/Save and translate** to save the configuration in its current state and translate it into the data-transfer language. **Always** use this function when you have finished working on the configuration and want to transfer it to the control unit.

Loading the configuration into the control unit

► Navigate to the hardware configuration tool.
► If not already done, save the configuration via **Station/Save and translate**.
► To load the configured project into the control unit, open **Target system/Load in components**.
► Select the target component and click on **OK**.

The project is transferred to the connected control unit.



Any changes made later to the configuration take effect only after you reload the project in the control unit.

10 Replacing components

10.1 Removing/replacing the plug-in unit

⚠ WARNING

Explosion risk!

► Prior to starting work, make sure that there is not a potentially explosive atmosphere!

⚠ WARNING

Dangerous contact voltage!

► All work on the u-remote station must be carried out with the power supply disconnected.

► Make sure that the place of installation (switch cabinet etc.) has been disconnected from the power supply!

ATTENTION

The product can be destroyed by electrostatic discharge!

The components in the u-remote series can be destroyed by electrostatic discharge.

► Please make sure that personnel and work equipment are adequately earthed!

► Unlock the connector frame.

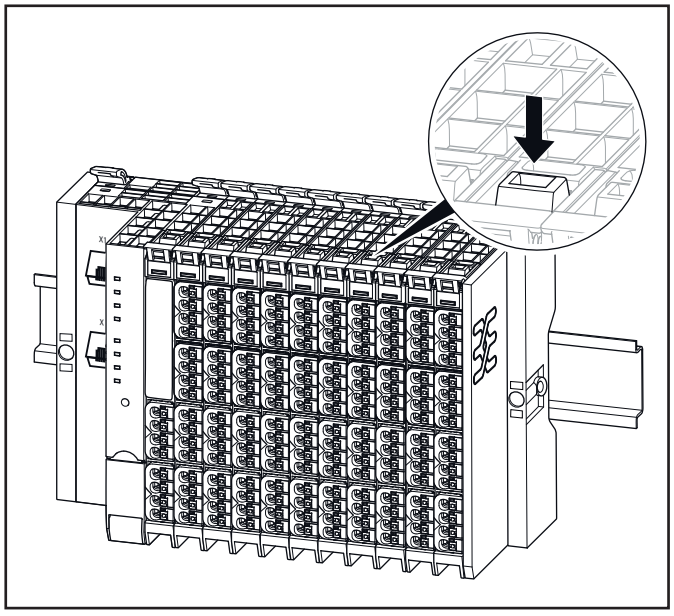

Unlocking the connector frame

► Swivel the plug-in unit with the cabling towards the front by 90°.

The plug-in unit can only be removed in this 90° position!

► Remove the plug-in unit by pulling it out in a straight, downward motion.

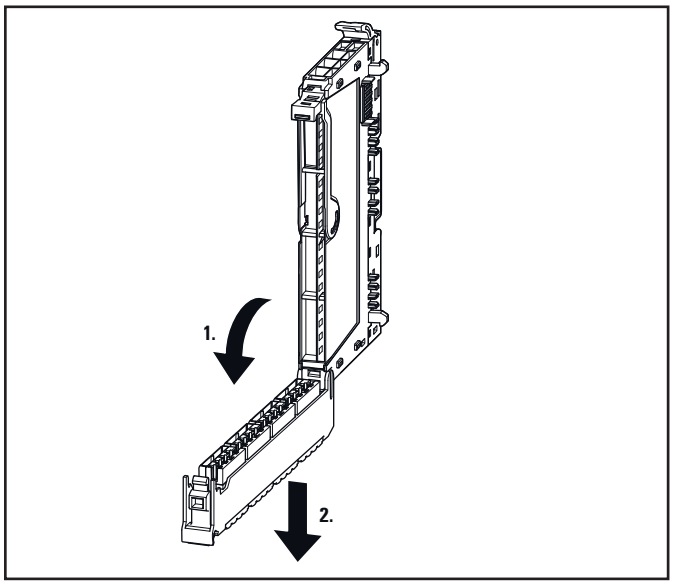

Opening the connector frame and pulling out the plug-in unit

10.2 Replacing the electronic unit/hot swap

The electronic unit of a UR20 module can be unplugged and plugged safely when de-energised. The wiring on the swivelling connector frame remains in place.
If the new electronic unit is to be coded by the customer, new coding pins will be required.
Hot swap describes unplugging and plugging of an electronic unit during operation. The station remains functional, switching off and restarting of the UR20 coupler is not necessary.



The condition for a hot swap is always that unplugging and plugging is not carried out under load. Follow the instructions in this chapter.

Hot swap is possbile with many UR20 modules without functional restrictions. For the modules listed below, there are restrictions or hot swapping is not possible at all.

Hot-Swap is **not** possible with the following modules:
- UR20-1COM-CAN
- UR20-1COM-CANOPEN
- UR20-1COM-SAI-PRO
- UR20-1SM-50W-6DI2DO-P
- UR20-3EM-230V-AC
- UR20-3EM-400V-AC-333mV
- UR20-3EM-400V-AC-CT1A
- UR20-3EM-400V-AC-CT5A
- UR20-3EM-400V-AC-RC
- UR20-4DI-2W-230V-AC
- UR20-4DI-4DO-PN-FSCC
- UR20-4DI-4DO-PN-FSOE
- UR20-4DI-4DO-PN-FSOE-V2
- UR20-4DI-4DO-PN-FSPS
- UR20-4DI-4DO-PN-FSPS-V2
- UR20-8DI-PN-FSCC
- UR20-8DI-PN-FSOE
- UR20-8DI-PN-FSOE-V2
- UR20-8DI-PN-FSPS
- UR20-8DI-PN-FSPS-V2
- UR20-PF-O-1DI-SIL
- UR20-PF-O-2DI-SIL
- UR20-PF-O-2DI-DELAY-SIL

Hot swap is possible but communication to the connected devices fails:
- UR20-4COM-IO-LINK
- UR20-4COM-IO-LINK-V2
- UR20-1COM-232-485-422
- UR20-1COM-232-485-422-V2
- UR20-4AI-I-HART-16-DIAG
- UR20-4AI-I-HART-ISO-16

The hot swap behaviour has been optimised with the firmware update for the UR20 couplers in February 2025. In combination with an UR20-AUX-VSYS auxiliary module, short term and implausible input data or output states that can occur on the entire UR20 station during unplugging or plugging an electonic module are avoided.



You can find the corresponding firmware version number in the release notes of the respective coupler. You can find the release notes in the download area of the product catalogue or in the Support Center.

⚠ WARNING

Explosion risk!
Pulling out the electronic unit during operation (hot swap) may generate sparks.
► Prior to starting work, make sure that there is not a potentially explosive atmosphere!

⚠ WARNING

Unexpected behaviour of the machine/system possible!
Unplugging and plugging of an electronic unit during operation might bring the inputs and outputs of all other modules temporarily into an undefined condition!
► If the machine/system might be put into a dangerous state as a result of the removal of an electronic unit, a replacement can only be made once the machine/system is disconnected from the power!

ATTENTION

Only one electronic unit may be removed from the station at a time. If several electronic units are to be replaced, this may only be done one after the other.
► Ensure that all electronic units are plugged before you unplug a single electronic unit.

ATTENTION

The product can be destroyed by electrostatic discharge!
The components in the u-remote series can be destroyed by electrostatic discharge.
► Please make sure that personnel and work equipment are adequately earthed!

Once an electronic unit is removed from a power-feed module, the inputs and outputs of the subsequent modules are no longer supplied with power. For safe power-feed modules, this is equivalent to triggering the connected safety equipment!

► Unlock the connector frame and open it as far as possible (at least to an angle of 90°).

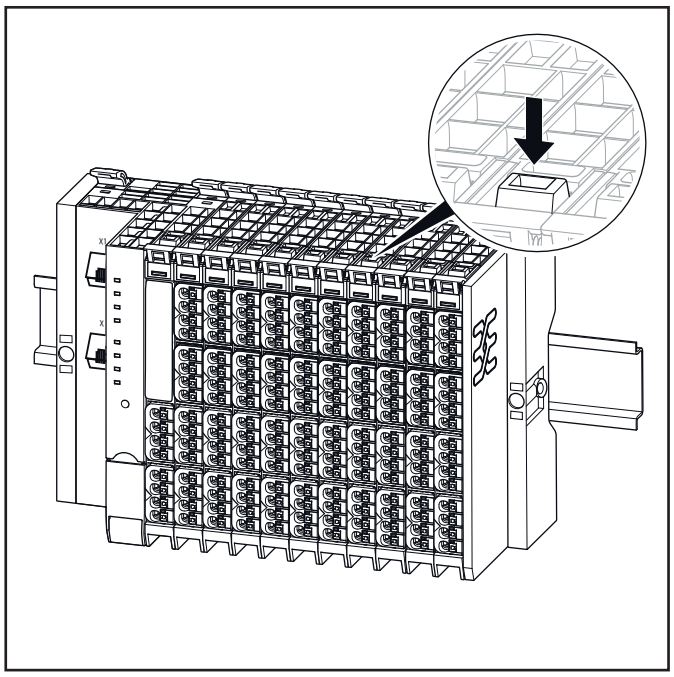

Unlocking the connector frame

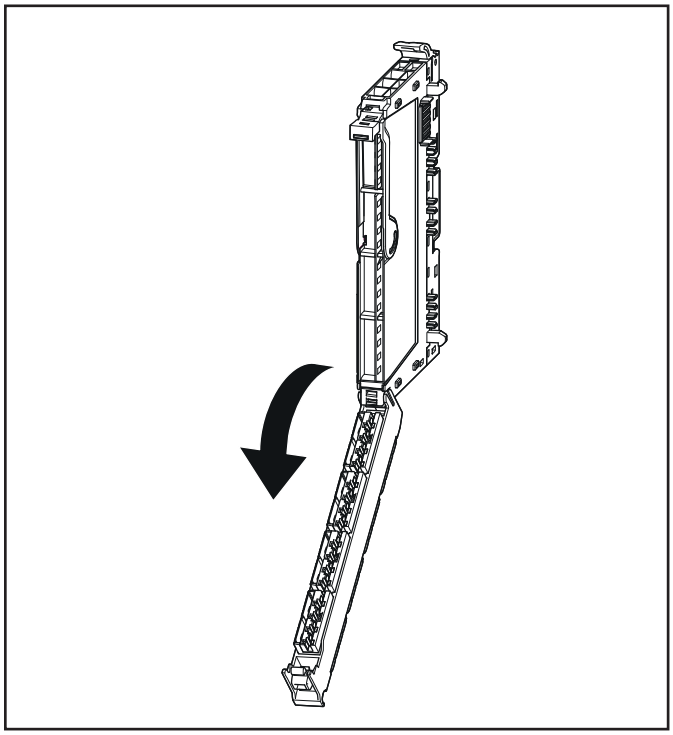

Opening the connector frame

► Lift the electronic unit removal lever and swivel it forwards by 90°.

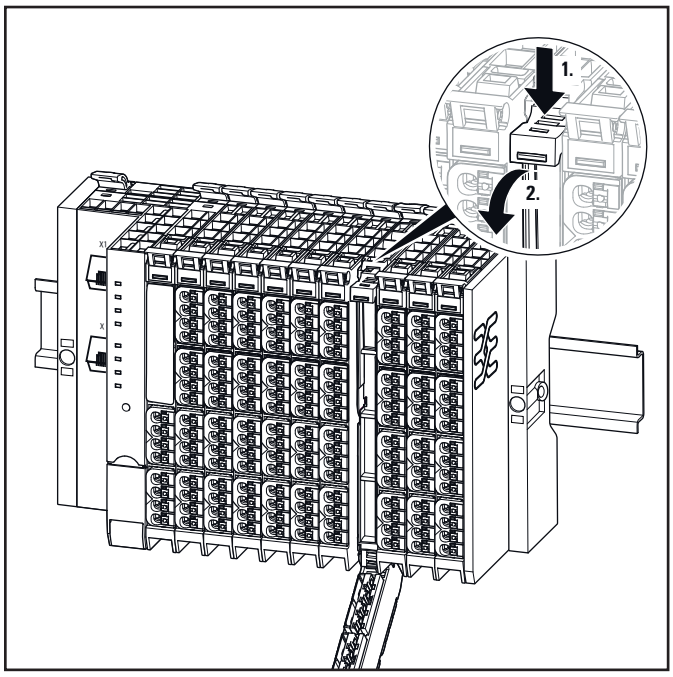

Unlocking the electronic unit

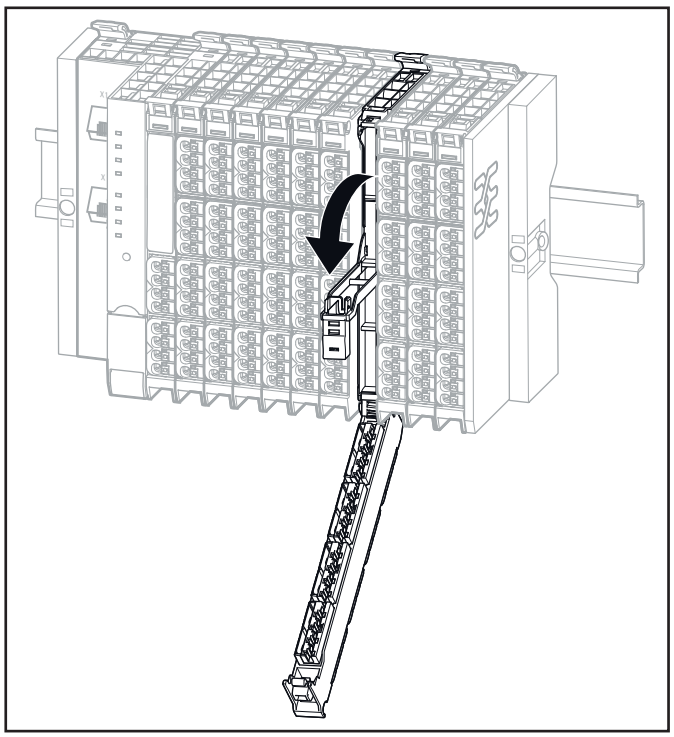

Opening the removal lever for the electronic unit

► Using the removal lever, pull the electronic unit forwards and out.

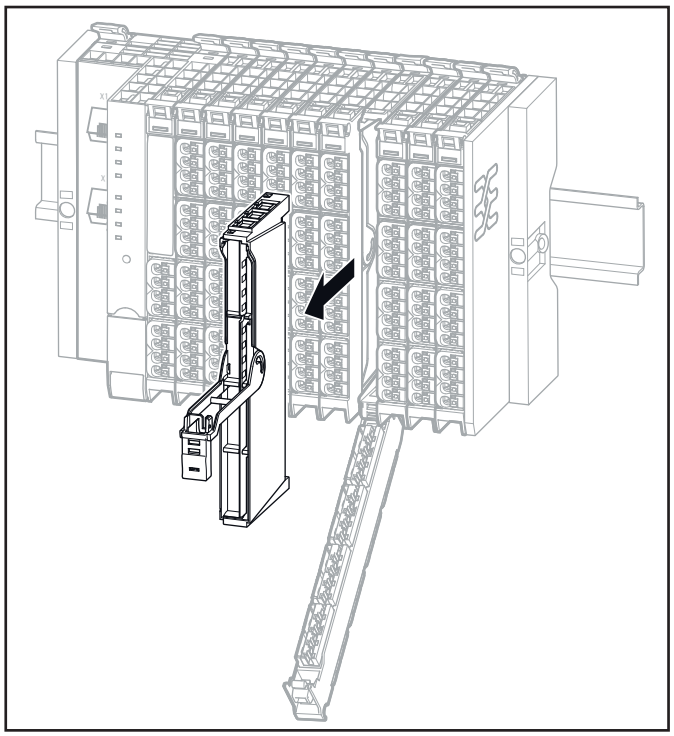

Pulling out the electronic unit

► If the existing electronic unit was coded, insert the new coding pins into the coding seats located in the base module (see Section 7.4).
► Safe I/O modules: Make sure, that the same address is set on the new electronic unit like on the old one (DIP-switches).
► Hold the new electronic unit by the top and the bottom, and carefully slide it into the base module.

The electronic units are functionally coded so that they can only be inserted into the appropriate base module. If it is not possible to insert a new electronic unit into the base module, check if the combination is correct and if there is a possible mix-up.

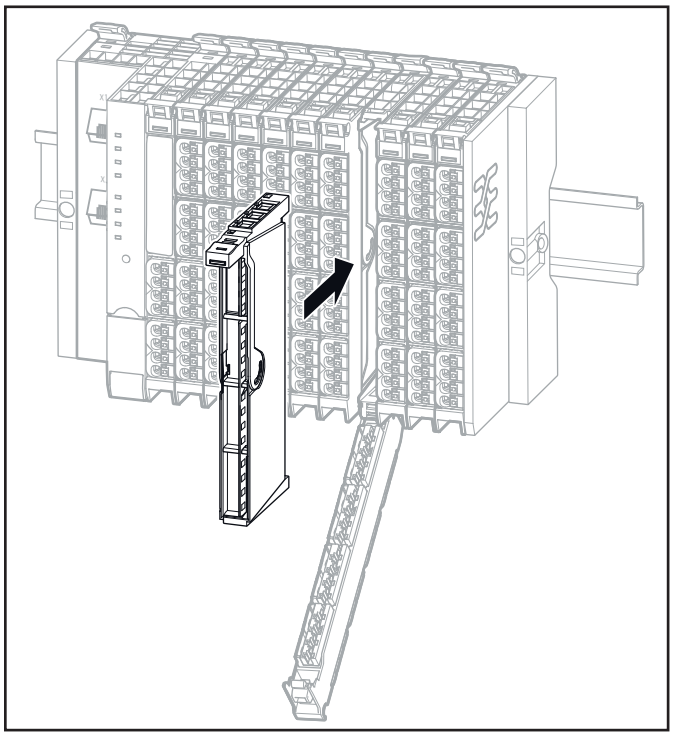

Inserting the new electronic unit

► Fold the connector frame back so that it closes and clicks into place.
► In case of replacement during operation: Pay attention to the **collective error LED** (**SF**) on the fieldbus coupler. Only when this doesn't light up any more, the new electronic unit has been recognised and the next electronic unit is able to be pulled out.

10.3 Replacing an I/O module

⚠ WARNING

Explosion risk!

► Prior to starting work, make sure that there is not a potentially explosive atmosphere!

⚠ WARNING

Dangerous contact voltage!

► All work on the u-remote station must be carried out with the power supply disconnected.
► Make sure that the place of installation (switch cabinet etc.) has been disconnected from the power supply!

ATTENTION

The product can be destroyed by electrostatic discharge!

The components in the u-remote series can be destroyed by electrostatic discharge.

► Please make sure that personnel and work equipment are adequately earthed!

To remove an individual module from the station, all modules to the right of it and the termination kit must be moved by approximately 5 cm.

► Unfasten the mounting screw on the right-hand end bracket.
► Slide the end bracket and end plate approximately 5 cm to the right or remove both parts from the DIN rail.
► Open the release lever on the module furthest to the right.

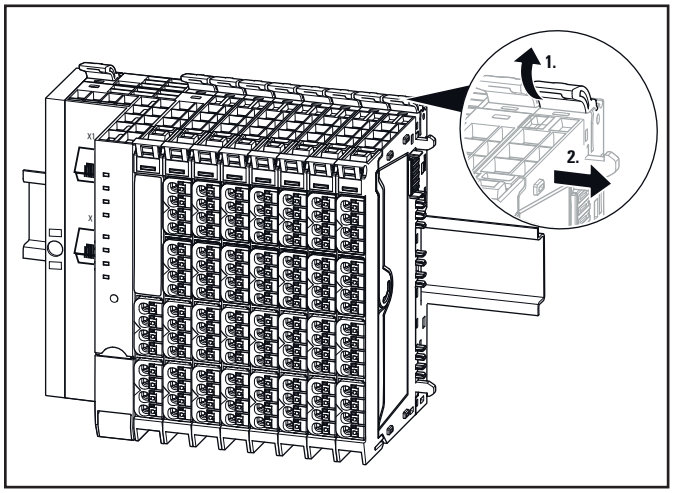

Unlocking the last I/O module

► Slide the module on the DIN rail approximately 5 cm to the right, push it onto the DIN rail and click the release lever into place.
► Repeat the aforementioned step for all other modules which are located to the right of the module being replaced: release, slide to the right and click in once again.

► Remove the plug-in unit of the module to be replaced as described in the section **Removing/replacing the plug-in unit**.
► Open the release lever for the module to be removed.

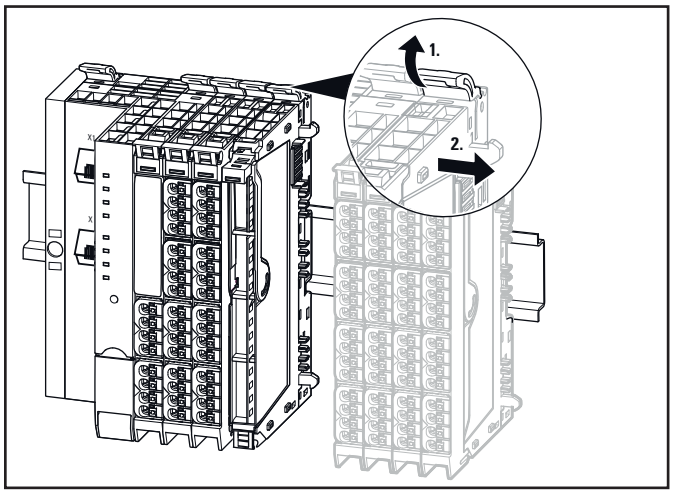

Unlocking the I/O module to be replaced

► Slide the module to the right and remove it from the DIN rail.

- ► Safe I/O modules: Make sure, that the same address is set on the new module like on the old one (DIP-switches).
- ► Position the new module with its closed release lever on the DIN rail so that it clicks audibly into place.
- ► Slide the module to the left until it audibly clicks into place against the neighbouring module.
- ► Return the modules that were slid away back into their original position: slide the modules to the left so that they audibly click into place on the new module.

After all the modules have been moved, make sure that they have all been clicked securely into place on the DIN rail!

- ► Reassemble the end plate and end bracket.
- ► Place the plug-in unit in a 90° position from below into the guideway of the base module on the new module.

The plug-in unit can only be inserted in this 90° position!

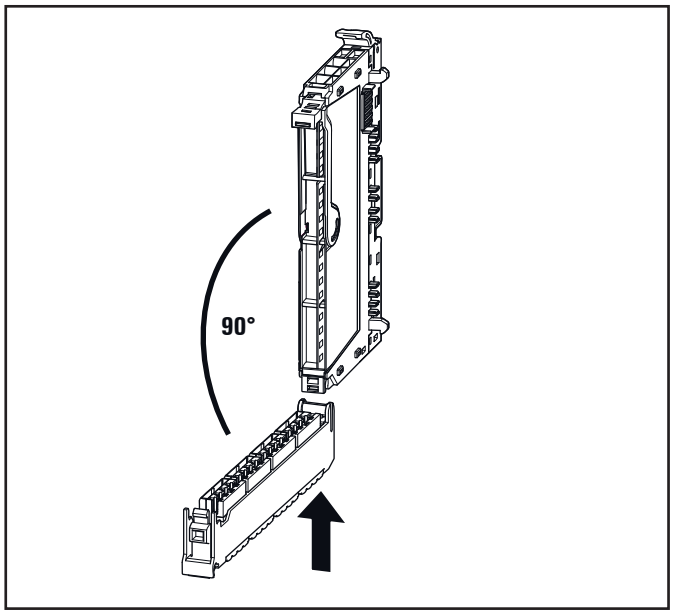

Inserting the plug-in unit

- ► Swivel the plug-in unit upwards until the connector frame clicks into place.

10.4 Removing/replacing connectors

⚠ WARNING

Explosion risk!

- ► Prior to starting work, make sure that there is not a potentially explosive atmosphere!

⚠ WARNING

Operation of the machine/system can be disrupted!

- ► In the event of the machine/system being put into a dangerous state as a result of the removal of a connector, a replacement can only be made once the machine/system is disconnected from the power!

⚠ WARNING

Risk of contact fire!

- ► Remove connectors only while they are load current free.

ATTENTION

The product can be destroyed by electrostatic discharge!

The components in the u-remote series can be destroyed by electrostatic discharge.

- ► Please make sure that personnel and work equipment are adequately earthed!

- ► Open the connector frame and flip the plug-in unit open so far that you can reach the connector.

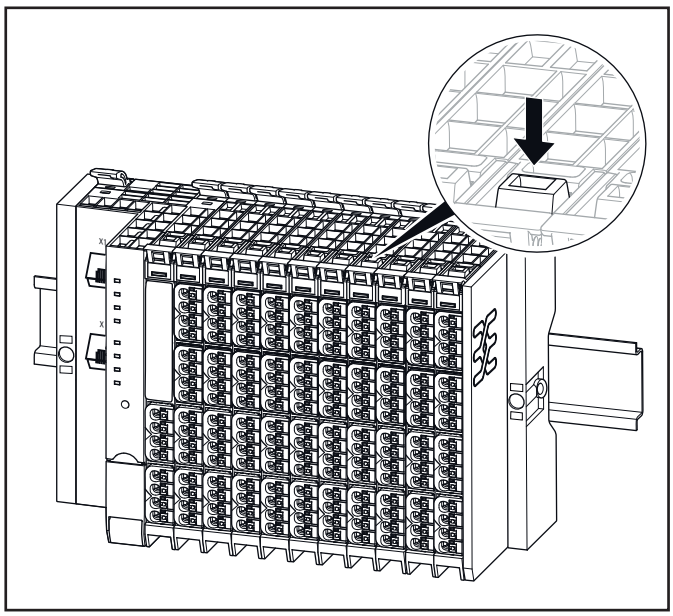

Unlocking the connector frame

► Press both sides of the connector together so that it can be slid off the frame.

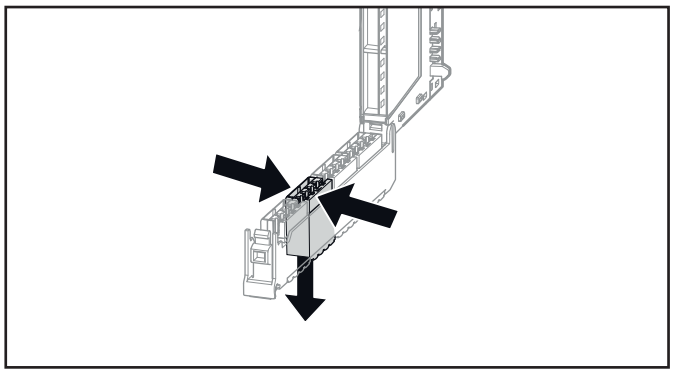

Pushing the connector together

► Remove the connector by pulling it off.
► Insert the new connector in the frame so that it audibly clicks into place.
► Swivel the plug-in unit upwards until the connector frame clicks into place.

10.5 Removing/replacing cables

⚠ WARNING

Explosion risk!

► Prior to starting work, make sure that there is not a potentially explosive atmosphere!

⚠ WARNING

Operation of the machine/system can be disrupted!

► If the machine/system is put into a dangerous state as a result of the removal of cables a replacement can only be made once the machine/system is disconnected from the power!

⚠ WARNING

Dangerous contact voltage!

► Prior to removing modules, the u-remote station must be completely de-energised (supply of the field bus coupler and all external feed-in).
► Make sure that the place of installation (switch cabinet etc.) has been disconnected from the power supply.

ATTENTION

The product can be destroyed by electrostatic discharge!

The components in the u-remote series can be destroyed by electrostatic discharge.

► Please make sure that personnel and work equipment are adequately earthed!

ATTENTION

The product can be destroyed by overcurrent!

Potentials may only be disconnected either simultaneously or in the correct order.

► At the fieldbus coupler as well as at power-feed modules always disconnect the 24 V supply (red pusher) first, before you disconect the GND potential (blue pusher)!

► Using a 3-mm screwdriver, push in the pusher adjacent to the cable to be removed and pull the wire out.

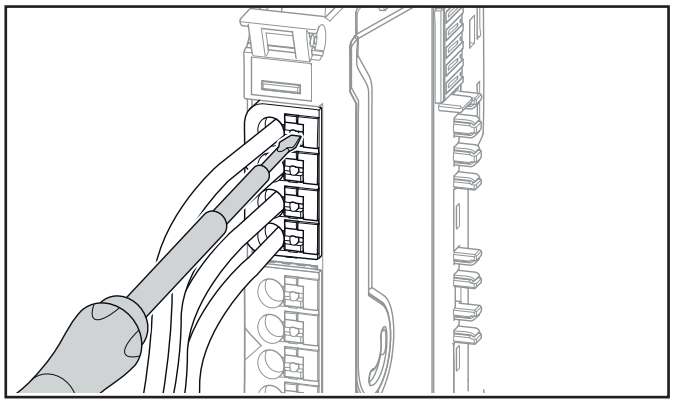

Pushing the pusher in with a screwdriver

► Release the pusher.
► Insert the new wire into the opening. To do so, you do not need to push in the pusher.

11 Disassembly and disposal

11.1 Disassembling the u-remote station

⚠ WARNING

Explosion risk!

► Prior to starting work, make sure that there is not a potentially explosive atmosphere!

⚠ WARNING

Dangerous contact voltage!

► Carry out all disassembly work on the u-remote station only when the power supply is disconnected.
► Make sure that the place of installation (switch cabinet etc.) has been disconnected from the power supply!

► Remove all cables and lines.
► Remove the end bracket marker (if present).
► Unfasten the mounting screw on the right-hand end bracket.
► Slide the end bracket with the end plate to the right and remove both from the DIN rail.

You can now disassemble the modules and the fieldbus coupler either individually or in groups of three to four modules.

► Press all the release levers of a module group towards the mounting plate so that they click into place.
► Slide the module group to the right and remove it from the DIN rail.
► Repeat the above procedure for all remaining modules/ module groups.
► To disassemble the fieldbus coupler, open both release levers and remove it from the DIN rail.
► Unfasten the mounting screw on the left-hand end bracket and remove it.
► Please observe the instructions for proper disposal.

11.2 Disposing of the u-remote station



The products contain substances that may be harmful to the environment and human health. In addition, it also contains substances that can be reused through targeted recycling.
Observe the notes for proper disposal of the product. You can find the notes here: www.weidmueller.com/disposal.



12 LED indicators and troubleshooting

In the event of a malfunction occurring on a u-remote station, carry out the following recommended measures. If the malfunction cannot be fixed, please send the affected product to Weidmüller. You can find all Weidmüller addresses and your local contact on the Internet at www.weidmueller.com/countries.
Weidmüller does not assume any liability if the base or electronic module has been tampered with!

12.1 Fieldbus coupler

Coupler/indicator	LED	Status	Recommended action
UR20-FBC-PB-DP, UR20-FBC-PB-DP-V2			
Power LED	PWR	**Green**: Supply voltage connected	
		Red: Coupler not yet started completely or hardware error	If the LED is permanently red after restart: contact the service, have coupler repaired or replaced
		Off, status LED of the module is **green**: Defective coupler	Have the coupler repaired or replaced The internal fuse was triggered due to an overload
		Off, module status LED is **off**: Improper supply voltage	Check the supply voltage
Collective error	SF	**Red**: Configuration error, or error in the coupler, or error in a module, or there is a new diagnostic message **Red flashing**: Station in Force mode	Check that the GSD file is up-to-date Check if the configured station setup matches the actual setup Read the diagnostic message with the web server or an engineering tool and determine which further actions to take
Bus failure	BF	**Red**: No connection to the fieldbus	Check the fieldbus cable and the PLC configuration
		Red flashing: Configuration error, no connection to the control unit, or error in the parameter set or slave address error or firmware update is running	Check the fieldbus parameters and the PLC configuration Check that the GSD file is up-to-date Check if the configured station setup matches the actual setup
Maintenance	MT	**Yellow**: Error on the system bus or the fieldbus	Check that the modules have been snapped into place properly Check fieldbus wiring Check the fieldbus connection parameters
Input supply voltage	3.1	**Green**: Supply voltage for input current path > 18 V DC	
	3.2	**Red**: Supply voltage for input current path < 18 V DC	Check the supply voltage
	3.4	**Red**: Internal fuse defective	Replace the coupler
Output supply voltage	4.1	**Green**: Supply voltage for output current path > 18 V DC	
	4.2	**Red**: Supply voltage for output current path < 18 V DC	Check the supply voltage
	4.4	**Red**: Internal fuse defective	Replace the coupler

Coupler/indicator	LED	Status	Recommended action
UR20-FBC-PN-IRT, UR20-FBC-PN-IRT-V2			
Power LED	PWR	**Green**: Supply voltage connected	
		Red: Coupler not yet started completely or hardware error	If the LED is permanently red after restart: contact the service, have coupler repaired or replaced
		Off and the status LED on the module is **green**: Defective coupler	Have coupler repaired or replaced The internal fuse was triggered due to an overload
		Off and the status LED on the module is **off**: Improper supply voltage	Check the supply voltage
Collective error	SF	**Red**: Configuration error, or error in the coupler, or error in a module, or there is a new diagnostic message **Red flashing**: Station in Force mode	Check that the GSDML file is up-to-date. Check if the configured station setup matches the actual setup Read the diagnostic message with the web server or an engineering tool and determine which further actions to take
Bus failure	BF	**Red**: No connection to the fieldbus	Check the fieldbus cable and the PLC configuration
		Red flashing: Configuration error, no connection to the control unit, or error in the parameter set, or firmware update is running	Check the fieldbus parameters and the PLC configuration Check that the GSD file is up-to-date Check if the configured station setup matches the actual setup
Maintenance	MT	**Yellow**: Error on the system bus	Check that the modules have been snapped into place properly
Connection	LINK1	**Green**: Connection established between port 1 of the coupler and another field device	
		Off: No connection	Check the connection to the next participant and the fieldbus cable
Active	ACT1	**Yellow**: Data being exchanged on port 1	
Connection	LINK2	**Green**: Connection established between port 2 of the coupler and another field device	
		Off: No connection	Check the connection to the next participant and the fieldbus cable
Active	ACT2	**Yellow**: Data being exchanged on port 2	
Input supply voltage	3.1	**Green**: Supply voltage for input current path connected	
	3.2	**Red**: Improper supply voltage for input current path	Check the supply voltage
	3.4	**Red**: Internal fuse defective	Replace the coupler
Output supply voltage	4.1	**Green**: Supply voltage for output current path connected	
	4.2	**Red**: Improper supply voltage for output current path	Check the supply voltage
	4.4	**Red**: Internal fuse defective	Replace the coupler

Coupler/indicator	LED	Status	Recommended action
UR20-FBC-EC			
Power LED	PWR	**Green**: Supply voltage connected	
		Red: Coupler not yet started completely or hardware error	If the LED is permanently red after restart: contact the service, have coupler repaired or replaced
		Off and the status LED on the module is **green**: Defective coupler	Have coupler repaired or replaced The internal fuse was triggered due to an overload
		Off and the status LED on the module is **off**: Improper supply voltage	Check the supply voltage
Collective error	SF	**Red**: Configuration error, or error in the coupler, or error in a module, or there is a new diagnostic message **Red flashing**: Station in Force mode	Check that the ESI configuration file is up-to-date Check if the configured station setup matches the actual setup Read the diagnostic message with the web server or an engineering tool and determine which further actions to take
Bus failure	BF	**Red**: No connection to the fieldbus	Check the fieldbus cable and the PLC configuration
		Red flashing: Configuration error, no connection to the control unit, or error in the parameter set	Check the fieldbus parameters and the PLC configuration Check that the ESI configuration file is up-to-date Check if the configu**red** station setup matches the actual setup
Maintenance	MT	**Yellow**: Error on the system bus or fieldbus	Check that the modules have been snapped into place properly
Connection/active	L/A IN	**Off**: No connection	Check the fieldbus cable
		Green: Connection established between port 1 of the coupler and another field device **Green flashing**: Data being exchanged on port 1	
Connection/active	L/A OUT	**Off**: No connection	Check the fieldbus cable
		Green: Connection established between port 2 of the coupler and another field device **Green flashing**: Data being exchanged on port 2	
Coupler state	RUN	**Off**: Coupler in INIT state **Green flashing**: Coupler in PRE-OPERATIONAL state **Green** lights up **briefly**: Coupler in SAFE OPERATIONAL state **Green**: Coupler in OPERATIONAL state	
Internal error	ERROR	**Red**: Critical error in the coupler **Red** lights up **briefly**: Error in the coupler application **Red** lights up **briefly twice**: Output of the sync manager watchdog out-of-date **Red flashing**: Configuration error	Check that the ESI file is up-to-date. Check if the configu**red** station setup matches the actual setup Check that the coupler firmware is up-to-date. Compare the master cycle time with the time set up on watchdog timer
Input supply voltage	3.1	**Green**: Supply voltage for input current path connected	
	3.2	**Red**: Improper supply voltage for input current path	Check the supply voltage
	3.4	**Red**: Internal fuse defective	Replace the coupler
Output supply voltage	4.1	**Green**: Supply voltage for output current path connected	
	4.2	**Red**: Improper supply voltage for output current path	Check the supply voltage
	4.4	**Red**: Internal fuse defective	Replace the coupler

Coupler/indicator	LED	Status	Recommended action
UR20-FBC-MOD-TCP, UR20-FBC-MOD-TCP-V2			
Power LED	PWR	**Green**: Supply voltage connected	
		Red: Coupler not yet started completely or hardware error	If the LED is permanently red after restart: contact the service, have coupler repaired or replaced
		Off and the status LED on the module is **green**: Defective coupler	Have coupler repaired or replaced The internal fuse was triggered due to an overload
		Off and the status LED on the module is **off**: Improper supply voltage	Check the supply voltage
Collective error	SF	**Red**: Configuration error, or error in the coupler, or error in a module, or there is a new diagnostic message **Red flashing**: Station in Force mode	Check if the configured station setup matches the actual station setup Read the diagnostic message with the web server or an engineering tool and determine which further actions to take
Bus failure	BF	**Red**: No connection to the fieldbus, or watchdog time expired	Check the fieldbus cable and the PLC configuration, disable or reset watchdog
		Red flashing: Configuration error, no connection to the control unit, or error in the parameter set, or firmware update is running or IP address conflict	Check if the configu**red** station setup matches the actual station setup Check the master configuration and try again to establish connection Ensure that a unique IP address is assigned to each participant in the local network
Maintenance	MT	**Yellow**: Error on the system bus or the fieldbus	Check that the modules have been snapped into place properly Check the fieldbus cabling Check the fieldbus connection parameters
Connection/active	L/A X1	**Green**: Connection established between port 1 of the coupler and another field device	
		Green flashing: Data being exchanged on port 1	
		Off: No connection	Check the connection to the next participant and the fieldbus cable
Connection/active	L/A X2	**Green**: Connection established between port 2 of the coupler and another field device	
		Green flashing: Data being exchanged on port 2	
		Off: No connection	Check the connection to the next participant and the fieldbus cable
Input supply voltage	3.1	**Green**: Supply voltage for input current path connected	
	3.2	**Red**: Improper supply voltage for input current path	Check the supply voltage
	3.4	**Red**: Internal fuse defective	Replace the coupler
Output supply voltage	4.1	**Green**: Supply voltage for output current path connected	
	4.2	**Red**: Improper supply voltage for output current path	Check the supply voltage
	4.4	**Red**: Internal fuse defective	Replace the coupler

Coupler/indicator	LED	Status	Recommended action
UR20-FBC-EIP-V2, UR20-FBC-EIP HW ≥ 2.00.00			
Power LED	PWR	**Green**: Supply voltage connected	
		Red: Coupler not yet started completely or hardware error	If the LED is permanently red after restart: contact the service, have coupler repaired or replaced
		Off and the status LED on the module is **green**: Defective coupler	Have coupler repaired or replaced The internal fuse was triggered due to an overload
		Off and the status LED on the module is **off**: Improper supply voltage	Check the supply voltage
Collective error	SF	**Red**: Configuration error, or error in the coupler, or error in a module, or there is a new diagnostic message	Check if the configured station setup matches the actual station setup Read the diagnostic message with the web server or an engineering tool and determine which further actions to take
		Red flashing: Station in Force mode	
Bus failure	BF	**Red**: No fieldbus connection	Check the fieldbus cable Check the PLC configuration
		Red flashing: Configuration error, no PLC connection or parameter set error or firmware update is running	Check the fieldbus parameters and the PLC configuration Check if the station's start-up setup matches the actual station setup
Maintenance	MT	**Yellow**: Error in the system bus or fieldbus error	Check that the modules have been snapped into place properly
Connection/active	L/A X1	**Green / Yellow**[1)]: Connection established between port X1 of the coupler and another field device	
		Green flashing / Yellow flashing[1)]: Data being exchanged on port X1	
Connection/active	L/A X2	**Green / Yellow**[1)]: Connection established between port X2 of the coupler and another field device	
		Green flashing / Yellow flashing[1)]: Data being exchanged on port X2	
Module status	MS	**Red**: More than one module does not fit the start-up configuration or no fieldbus connection	Check if the station's start-up setup matches the actual station setup; restart coupler to define a new start-up configuration
		Red flashing: One module does not fit the start-up configuration or there is a diagnostic alarm on at least one module	Check if the station's start-up setup matches the actual station setup; restart coupler to define a new start-up configuration Read the diagnostic message with the web server or an engineering tool and determine which further actions to take
		Green: Ready for operation	
		Green flashing: Coupler not configured	Check the fieldbus parameters and the PLC configuration
		Red/green flashing: LED self test during start	Please wait
Network status	NS	**Off:** No IP address assigned	Assign IP address
		Red: IP address conflict	Check the IP address
		Red flashing: Timeout of the exclusive owner connection	Check the fieldbus parameters and the PLC configuration
		Green: At least one EtherNet/IP connection is established	
		Green flashing: no EtherNet/IP connection is established	Check the fieldbus parameters and the PLC configuration
		Red/green flashing: LED self test during start	Please wait
Input supply voltage	3.1	**Green**: Supply voltage for input current path > 18 V DC	
	3.2	**Red**: Supply voltage for input current path < 18 V DC	Check the supply voltage
	3.4	**Red**: Internal fuse defective	Replace the coupler
Output supply voltage	4.1	**Green**: Supply voltage for output current path > 18 V DC	
	4.2	**Red**: Supply voltage for output current path < 18 V DC	Check the supply voltage
	4.4	**Red**: Internal fuse defective	Replace the coupler

1) Green: transfer rate 100 Mbps; Yellow: transfer rate 10 Mbps

Coupler/indicator	LED	Status	Recommended action
UR20-FBC-EIP HW < 2.00.00			
Power LED	PWR	**Green**: Supply voltage connected	
		Red: Coupler not yet started completely or hardware error	If the LED is permanently red after restart: contact the service, have coupler repaired or replaced
		Off and the status LED on the module is **green**: Defective coupler	Have coupler repaired or replaced The internal fuse was triggered due to an overload
		Off and the status LED on the module is **off**: Improper supply voltage	Check the supply voltage
Collective error	SF	**Red**: Configuration error, or error in the coupler, or error in a module, or there is a new diagnostic alarm	Check if the configured station setup matches the actual station setup
		Red flashing: Station in force mode	Read the diagnostic message with the web server or an engineering tool and determine which further actions to take
Module status	MS	**Red**: More than one module does not fit the start-up configuration or no fieldbus connection	Check if the station's start-up setup matches the actual station setup; restart coupler to define a new start-up configuration
		Red flashing: One module does not fit the start-up configuration or there is a diagnostic message on at least one module	Check if the station's start-up setup matches the actual station setup; restart coupler to define a new start-up configuration Read the diagnostic message with the web server or an engineering tool and determine which further actions to take
Network status	NS	**Off**: At least one EtherNet/IP connection is established	
		Yellow: Address conflict or no IP address configured	Assign address via web server or DHCP/BootP
		Yellow flashing (1 Hz): Valid IP address but no EtherNet/IP connection established	Check the fieldbus cable Check the CLP configuration
		Yellow flashing (4 Hz): Connection timeout on an exclusive owner	Check the fieldbus cable Check the CLP configuration
Connection/active	L/A X1	**Green/Yellow**[1)]: Connection established between port X1 of the coupler and another field device	
		Green flashing/Yellow flashing[1)]: Data being exchanged on port X1	
		Off: No connection	Check the connection to the next participant and the fieldbus cable
Connection/active	L/A X2	**Green/Yellow**[1)]: Connection established between port X2 of the coupler and another field device	
		Green flashing/Yellow flashing[1)]: Data being exchanged on port X2	
		Off: No connection	Check the connection to the next participant and the fieldbus cable
Input supply voltage	3.1	**Green**: Supply voltage for input current path > 18 V DC	
	3.2	**Red**: Supply voltage for input current path < 18 V DC	Check the supply voltage
	3.4	**Red**: Internal fuse defective	Replace the coupler
Output supply voltage	4.1	**Green**: Supply voltage for output current path > 18 V DC	
	4.2	**Red**: Supply voltage for output current path < 18 V DC	Check the supply voltage
	4.4	**Red**: Internal fuse defective	Replace the coupler

1) Green: transfer rate 100 Mbps; Yellow: transfer rate 10 Mbps

Coupler/indicator	LED	Status	Recommended action
UR20-FBC-DN			
Power LED	PWR	**Green**: Supply voltage connected	
		Red: Coupler not yet started completely or hardware error	If the LED is permanently red after restart: contact the service, have coupler repaired or replaced
		Off and the status LED on the module is **green**: Defective coupler	Have coupler repaired or replaced The internal fuse was triggered due to an overload
		Off and the status LED on the module is **off**: Improper supply voltage	Check the supply voltage
Collective error	SF	**Red**: Configuration error, or error in the coupler, or error in a module, or there is a new diagnostic message **Red flashing**: Station in Force mode	Check that the ESI configuration file is up-to-date Check if the configured station setup matches the actual setup Read the diagnostic message with the web server or an engineering tool and determine which further actions to take
Bus failure	BF	**Red**: No connection to the fieldbus	Check the fieldbus cable and the PLC configuration
		Red flashing: Configuration error, no connection to the control unit, or error in the parameter set	Check the fieldbus parameters and the PLC configuration Check that the ESI configuration file is up-to-date Check if the configu**red** station setup matches the actual setup
Maintenance	MT	**Yellow**: Error on the system bus or fieldbus	Check that the modules have been snapped into place properly
Module/Network status	MNS	**Off:** Duplicate MAC ID check active **Green**: DeviceNet connection established, device status OK **Green flashing**: No DeviceNet connection established, device status OK	
		Red: Bus failure	Check if MAC-ID is duplicated or device is in state BusOFF or check bus physics
		Red flashing: Bus connection timeout	Check the fieldbus for: cable interruption, plug has been pulled, 24 V supply for the fieldbus
Input/Output	IO	**Green**: Data exchange active, outputs are accessed by the PLC	
		Green flashing: Station in idle mode (outputs are not accessed by the PLC)	Check if the CPU of the PLC is in STOPP mode
		Red: At least one stack differs from the start configuration (e.g. one module has been pulled)	Check the configuration of the station
		Red flashing: Diagnostic message on at least one module	Read/confirm diagnostic message
Input supply voltage	3.1	**Green**: Supply voltage for input current path > 18 V DC	
	3.2	**Red**: Supply voltage for input current path < 18 V DC	Check the supply voltage
	3.4	**Red**: Internal fuse defective	Replace the coupler
Output supply voltage	4.1	**Green**: Supply voltage for output current path > 18 V DC	
	4.2	**Red**: Supply voltage for output current path < 18 V DC	Check the supply voltage
	4.4	**Red**: Internal fuse defective	Replace the coupler

Coupler/indicator	LED	Status	Recommended action
UR20-FBC-CAN			
Power LED	PWR	**Green**: Supply voltage connected	
		Red: Coupler not yet started completely or hardware error	If the LED is permanently red after restart: contact the service, have coupler repaired or replaced
		Off and the status LED on the module is **green**: Defective coupler	Have coupler repaired or replaced The internal fuse was triggered due to an overload
		Off and the status LED on the module is **off**: Improper supply voltage	Check the supply voltage
Collective error	SF	**Red**: Configuration error, or error in the coupler, or error in a module, or there is a new diagnostic message **Red flashing**: Station in Force mode	Check that the EDS file is up-to-date Check if the configured station setup matches the actual setup Read the diagnostic message with the web server or an engineering tool and determine which further actions to take
Bus failure	BF	**Red**: No connection to the fieldbus	Check the fieldbus cable and the PLC configuration
		Red flashing: Configuration error, no connection to the control unit, or error in the parameter set	Check the fieldbus parameters and the PLC configuration Check that the EDS file is up-to-date Check if the configu**red** station setup matches the actual setup
Maintenance	MT	**Yellow**: Error on the system bus or fieldbus	Check that the modules have been snapped into place properly
Internal error	ERROR	**Red**: No fieldbus communication (BusOFF)	Check the fieldbus wiring (terminating resistor)
		Red fast flashing[1)]: Auto baud rate detection running	Check the fieldbus wiring, restart the fieldbus
		Red flashing: Configuration error	Check the configuration, check the bus address
		Red one short flash: CAN error counter reached warning level	Bad bus physics or collision, check fieldbus
		Red two short flashes: Node guarding (node guard or heartbeat)	PLC or NMT master failed
Coupler state	RUN	**Green**: Fieldbus running (OPERATIONAL) **Green flashing**: Fieldbus in state PRE-OPERATIONAL	
		Green fast flashing[1)]: Auto baud rate detection running	see above
Input supply voltage	3.1	**Green**: Supply voltage for input current path > 18 V DC	
	3.2	**Red**: Supply voltage for input current path < 18 V DC	Check the supply voltage
	3.4	**Red**: Internal fuse defective	Replace the coupler
Output supply voltage	4.1	**Green**: Supply voltage for output current path > 18 V DC	
	4.2	**Red**: Supply voltage for output current path < 18 V DC	Check the supply voltage
	4.4	**Red**: Internal fuse defective	Replace the coupler

1) Alternating

Coupler/indicator	LED	Status	Recommended action
UR20-FBC-PL			
Power-LED	PWR	**Green**: Supply voltage connected	
		Red: Coupler not yet started completely or hardware error	If the LED is permanently red after restart: contact the service, have coupler repaired or replaced
Collective error	SF	**Red**: Configuration error, or error in the coupler, or error in a module, or there is a new diagnostic message **Red flashing**: Station in Force mode	Check that the XDD file is up-to-date Check if the configured station setup matches the actual setup Read the diagnostic message with the web server or an engineering tool and determine which further actions to take
Bus failure	BF	**Red**: No connection to the fieldbus	Check the fieldbus cable and the PLC configuration
		Red flashing: Configuration error, no connection to the control unit, or error in the parameter set or slave address error or firmware update is running	Check the fieldbus parameters and the PLC configuration Check that the XDD file is up-to-date Check if the configu**red** station setup matches the actual setup
Maintenance	MT	**Yellow**: Error on the system bus or fieldbus	Check that the modules have been snapped into place properly
Connection/Activity	L/A X1	**Green**: Ethernet link established on port X1	
		Green flickering: Data received or transmitted on port X1	
Connection/Activity	L/A X2	**Green**: Ethernet link established on port X2	
		Green flickering: Data received or transmitted on port X2	
Status	STATUS	**Green**: OPERATIONAL mode	
		Off: No power supply or mode is NOT_ACTIVE If no POWERLINK communication is detected during 5 seconds, the bus controller goes into the BASIC_ETHERNET mode. If POWERLINK communication is detected before this time passes, the bus controller goes into the PRE_OPERATIONAL_1 mode.	
		Green flickering: BASIC_ETHERNET mode The bus controller did not detect any POWERLINK communication. In this mode, direct communication with the bus controller is possible using Ethernt frames (eg. TCP/IP or UDP/IP) If POWERLINK communication is detected while in this mode, the bus controller goes into the PRE_OPERATIONAL_1 mode.	
		Green flashing: STOPPED mode No output data sent nor input data received. Only the appropriate command from the MN (Managing Node) can enter or leave this mode	
		Green single flash: PRE_OPERATIONAL_1 mode. With operation on an POWERLINK V2 MN, the CN (Controlled Node) waits for the reception of a SoC frame and then switches over to PRE_OPERATIONAL_2 mode.	
		Green double flash: PRE_OPERATIONAL_2 mode. In this mode the bus controller is normally configured by the MN. A command then switches the mode to READY_TO_OPERATE.	
		Green triple flash: READY_TO_OPERATE mode. The MN then switches via command to OPERATIONAL mode.	
Error	ERROR	**Red**: The bus controller has encountered an error (failed Ethernet frames, increased number of collisions on the network, etc.).	

Coupler/indicator	LED	Status	Recommended action
UR20-FBC-IEC61162-450			
Power-LED	PWR	**Green**: Supply voltage connected	
		Red: Coupler not yet started completely or hardware error	If the LED is permanently red after restart: contact the service, have coupler repaired or replaced
Collective error	SF	**Red**: Configuration error, or error in the coupler, or error in a module, or there is a new diagnostic message **Red flashing**: Station in Force mode	Check if the current station setup matches the station setup at start-up Read the diagnostic message with the web server or an engineering tool and determine which further actions to take
Bus failure	BF	**Red**: No connection to the fieldbus or coupler parameter "Connected to fieldbus" is set to "Off"	Check the fieldbus cable
		Red flashing: Configuration error or error in the parameter set or firmware update is running	Check the fieldbus parameters Check if the current station setup matches the station setup at start-up
Maintenance	MT	**Yellow**: Error on the system bus or fieldbus	Check that the modules have been snapped into place properly
Connection/Activity	L/A X1	**Green / Yellow**[1)]: Connection established between port X1 of the coupler and another field device	
		Green flashing / Yellow flashing[1)]: Data being exchanged on port X1	
Connection/Activity	L/A X2	**Green / Yellow**[1)]: Connection established between port X2 of the coupler and another field device	
		Green flashing / Yellow flashing[1)]: Data being exchanged on port X2	
UR20-FBC-CC			
Power-LED	PWR	**Green**: Supply voltage connected	
		Red: Coupler not yet started completely or hardware error	If the LED is permanently red after restart: contact the service, have coupler repaired or replaced
		Off and the status LED on the module is **green**: Defective coupler	Have coupler repaired or replaced The internal fuse was triggered due to an overload
		Off and the status LED on the module is **off**: Improper supply voltage	Check the supply voltage
Collective error	SF	**Red:** Configuration error, or error in the coupler, or error in a module, or there is a new diagnostic message **Red flashing**: Station in Force mode	Check if the configured station setup matches the actual setup Read the diagnostic message with the web server or an engineering tool and determine which further actions to take
Bus failure	BF	**Red:** No connection to the fieldbus	Check the fieldbus cable and the PLC configuration
		Red flashing: Configuration error, no connection to the control unit, or error in the parameter set or slave address error or firmware update is running	Check the fieldbus parameters and the PLC configuration Check if the configured station setup matches the actual setup
Maintenance	MT	**Yellow**: Error on the system bus or fieldbus	Check that the modules have been snapped into place properly
CC-Link device status	RUN	**Green**: Device status OK	
		Off: Power up or Watchdog timer error	Please wait
CC-Link data exchange	L RUN	**Off**: No data exchange	
		Green: Data exchange active	

1) Green: Transfer rate 100 MBit/s, Yellow: Transfer rate 10 MBit/s

Coupler/indicator	LED	Status	Recommended action
CC-Link error	L ERR	**Off**: No data exchange	
		Red flashing: Rotary switch settings have been changed during operation and do not match with the current device address	
		Red: Communication error (own station) or invalid device address	
CC-Link bus configuration	BC	**Off**: CC-Link device not yet ready for operation	
		Red/green flashing (0.5 seconds each): Auto bauding in progress	
		Red: Carrier is missing	Check the fieldbus cable and the PLC configuration
		Green: – Static Baudrate is selected: Carrier is present. – After Autobauding is finished: Carrier is present AND Autobauding has detected a baud rate.	
Input supply voltage	3.1	**Green**: Supply voltage for input current path > 18 V DC	
	3.2	**Red**: Supply voltage for input current path < 18 V DC	Check the supply voltage
	3.4	**Red**: Internal fuse defective	Replace the coupler
Output supply voltage	4.1	**Green**: Supply voltage for output current path > 18 V DC	
	4.2	**Red**: Supply voltage for output current path < 18 V DC	Check the supply voltage
	4.4	**Red**: Internal fuse defective	Replace the coupler
UR20-FBC-CC-TSN			
Power LED	PWR	**Green**: Supply voltage connected	
		Red: Coupler not yet started completely or hardware error	If the LED is permanently red after restart: contact the service, have coupler repaired or replaced
		Off and the status LED on the module is **green**: Defective coupler	Have coupler repaired or replaced The internal fuse was triggered due to an overload
		Off and the status LED on the module is **off**: Improper supply voltage	Check the supply voltage
Collective error	SF	**Red:** Configuration error, or error in the coupler, or error in a module, or there is a new diagnostic message **Red flashing**: Station in Force mode	Check if the configured station setup matches the actual setup Read the diagnostic message with the web server or an engineering tool and determine which further actions to take
Bus failure	BF	**Red:** No connection to the fieldbus	Check the fieldbus cable and the PLC configuration
		Red flashing: Configuration error, no connection to the control unit, or error in the parameter set or slave address error or firmware update is running	Check the fieldbus parameters and the PLC configuration Check if the configured station setup matches the actual setup
Maintenance	MT	**Yellow**: Error on the system bus or fieldbus	Check that the modules have been snapped into place properly
Connection	LINK X1	**Green**: Connection established between port 1 of the coupler and another field device	
		Off: No connection	Check the supply voltage Check the network cable

1) Green: Transfer rate 100 MBit/s, Yellow: Transfer rate 10 MBit/s

Coupler/indicator	LED	Status	Recommended action
Connection	LINK X2	**Green**: Connection established between port 1 of the coupler and another field device	
		Off: No connection	Check the supply voltage Check the network cable
Data transmission	D LINK	**Green**: Cyclic transmission running	
		Green flashing: Cyclic transmission stopped	
		Off: No cyclic transmission established	Check the fieldbus parameters and the PLC configuration
Error	ERR	**Red**: Moderate error or major error occurred	Check if one of the following incidents occurred: – External power supply OFF – DIP-switch out of range – IP address setting error – System bus error – Voltage U_{IN} error
		Red flashing: Minor error occurreds	Check if one of the following incidents occurred: – DIP-switch changed – Voltage drop error of the module power supply – IP address assigned more than once – Summarized module diagnosis: A diagnosis is available for at least one module with diagnostics functionality. – Station pending: More than one electronic unit or module has been removed from the station. – I/O-configuration error: The module list has changed. The list of configured modules differs from the module list detected by the coupler. – Voltage U_{OUT} error – IO-Link diagnosis: A diagnosis is available for an IO-Link device.
		Off: No error	
X1/X2	Green LED	**Green**: Connection established between port 1/2 of the coupler and another field device	
		Off: No connection	Check the supply voltage Check the network cable
	Red LED	**Red:** Invalid data received or loopback in progress	
		Off: Valid data received and loopback not performed	
Input supply voltage	3.1	**Green**: Supply voltage for input current path > 18 V DC	
	3.2	**Red**: Supply voltage for input current path < 18 V DC	Check the supply voltage
Output supply voltage	4.1	**Green**: Supply voltage for output current path > 18 V DC	
	4.2	**Red**: Supply voltage for output current path < 18 V DC	Check the supply voltage

1) Green: Transfer rate 100 MBit/s, Yellow: Transfer rate 10 MBit/s

Coupler/indicator	LED	Status	Recommended action
UR20-FBC-PN-ECO			
Power LED	PWR	**Green**: Supply voltage connected	
		Red: Coupler not yet started completely or hardware error	If the LED is permanently red after restart: contact the service, have coupler repaired or replaced
		Off and the status LED on the module is **green**: Defective coupler	Have coupler repaired or replaced The internal fuse was triggered due to an overload
		Off and the status LED on the module is **off**: Improper supply voltage	Check the supply voltage
Collective error	SF	**Red**: Configuration error, or error in the coupler, or error in a module, or there is a new diagnostic message **Red flashing**: Station in Force mode	Check that the GSDML file is up-to-date. Check if the configured station setup matches the actual setup Read the diagnostic message with the web server or an engineering tool and determine which further actions to take
Bus failure	BF	**Red**: No connection to the fieldbus	Check the fieldbus cable and the PLC configuration
		Red flashing: Configuration error, no connection to the control unit, or error in the parameter set, or firmware update is running	Check the fieldbus parameters and the PLC configuration Check that the GSD file is up-to-date Check if the configured station setup matches the actual setup
Maintenance	MT	**Yellow**: Error on the system bus	Check that the modules have been snapped into place properly
Connection	LINK1	**Green**: Connection established between port 1 of the coupler and another field device	
		Off: No connection	Check the connection to the next participant and the fieldbus cable
Active	ACT1	**Yellow**: Data being exchanged on port 1	
Connection	LINK2	**Green**: Connection established between port 2 of the coupler and another field device	
		Off: No connection	Check the connection to the next participant and the fieldbus cable
Active	ACT2	**Yellow**: Data being exchanged on port 2	
Supply voltage	4.1	**Green**: Supply voltage > 17 V DC ±1 V	
	4.4	**Red**: Supply voltage < 17 V DC ±1 V	Check the supply voltage

Coupler/indicator	LED	Status	Recommended action
UR20-FBC-EC-ECO			
Power LED	PWR	**Green**: Supply voltage connected	
		Red: Coupler not yet started completely or hardware error	If the LED is permanently red after restart: contact the service, have coupler repaired or replaced
		Off and the status LED on the module is **green**: Defective coupler	Have coupler repaired or replaced The internal fuse was triggered due to an overload
		Off and the status LED on the module is **off**: Improper supply voltage	Check the supply voltage
Collective error	SF	**Red**: Configuration error, or error in the coupler, or error in a module, or there is a new diagnostic message **Red flashing**: Station in Force mode	Check that the ESI configuration file is up-to-date Check if the configured station setup matches the actual setup Read the diagnostic message with the web server or an engineering tool and determine which further actions to take
Bus failure	BF	**Red**: No connection to the fieldbus	Check the fieldbus cable and the PLC configuration
		Red flashing: Configuration error, no connection to the control unit, or error in the parameter set	Check the fieldbus parameters and the PLC configuration Check that the ESI configuration file is up-to-date Check if the configu**red** station setup matches the actual setup
Maintenance	MT	**Yellow**: Error on the system bus or fieldbus	Check that the modules have been snapped into place properly
Connection/active	L/A IN	**Off**: No connection	Check the fieldbus cable
		Green: Connection established between port 1 of the coupler and another field device **Green flashing**: Data being exchanged on port 1	
Connection/active	L/A OUT	**Off**: No connection	Check the fieldbus cable
		Green: Connection established between port 2 of the coupler and another field device **Green flashing**: Data being exchanged on port 2	
Coupler state	RUN	**Off**: Coupler in INIT state **Green flashing**: Coupler in PRE-OPERATIONAL state **Green** lights up **briefly**: Coupler in SAFE OPERATIONAL state **Green**: Coupler in OPERATIONAL state	
Internal error	ERROR	**Red**: Critical error in the coupler **Red** lights up **briefly**: Error in the coupler application **Red** lights up **briefly twice**: Output of the sync manager watchdog out-of-date **Red flashing**: Configuration error	Check that the ESI file is up-to-date. Check if the configu**red** station setup matches the actual setup Check that the coupler firmware is up-to-date. Compare the master cycle time with the time set up on watchdog timer
Supply voltage	4.1	**Green**: Supply voltage > 17 V DC ±1 V	
	4.4	**Red**: Supply voltage < 17 V DC ±1 V	Check the supply voltage

Coupler/indicator	LED	Status	Recommended action
UR20-FBC-MOD-TCP-ECO			
Power LED	PWR	**Green**: Supply voltage connected	
		Red: Coupler not yet started completely or hardware error	If the LED is permanently red after restart: contact the service, have coupler repaired or replaced
		Off and the status LED on the module is **green**: Defective coupler	Have coupler repaired or replaced The internal fuse was triggered due to an overload
		Off and the status LED on the module is **off**: Improper supply voltage	Check the supply voltage
Collective error	SF	**Red**: Configuration error, or error in the coupler, or error in a module, or there is a new diagnostic message **Red flashing**: Station in Force mode	Check if the configured station setup matches the actual station setup Read the diagnostic message with the web server or an engineering tool and determine which further actions to take
Bus failure	BF	**Red**: No connection to the fieldbus, or watchdog time expired	Check the fieldbus cable and the PLC configuration, disable or reset watchdog
		Red flashing: Configuration error, no connection to the control unit, or error in the parameter set, or firmware update is running or IP address conflict	Check if the configu**red** station setup matches the actual station setup Check the master configuration and try again to establish connection Ensure that a unique IP address is assigned to each participant in the local network
Maintenance	MT	**Yellow**: Error on the system bus or the fieldbus	Check that the modules have been snapped into place properly Check the fieldbus cabling Check the fieldbus connection parameters
Connection/active	L/A X1	**Green**: Connection established between port 1 of the coupler and another field device	
		Green flashing: Data being exchanged on port 1	
		Off: No connection	Check the connection to the next participant and the fieldbus cable
Connection/active	L/A X2	**Green**: Connection established between port 2 of the coupler and another field device	
		Green flashing: Data being exchanged on port 2	
		Off: No connection	Check the connection to the next participant and the fieldbus cable
Supply voltage	4.1	**Green**: Supply voltage > 17 V DC ±1 V	
	4.4	**Red**: Supply voltage < 17 V DC ±1 V	Check the supply voltage

Coupler/indicator	LED	Status	Recommended action
UR20-FBC-EIP-ECO			
Power LED	PWR	**Green**: Supply voltage connected	
		Red: Coupler not yet started completely or hardware error	If the LED is permanently red after restart: contact the service, have coupler repaired or replaced
		Off and the status LED on the module is **green**: Defective coupler	Have coupler repaired or replaced The internal fuse was triggered due to an overload
		Off and the status LED on the module is **off**: Improper supply voltage	Check the supply voltage
Collective error	SF	**Red**: Configuration error, or error in the coupler, or error in a module, or there is a new diagnostic message	Check if the configured station setup matches the actual station setup Read the diagnostic message with the web server or an engineering tool and determine which further actions to take
		Red flashing: Station in Force mode	
Bus failure	BF	**Red**: No fieldbus connection	Check the fieldbus cable Check the PLC configuration
		Red flashing: Configuration error, no PLC connection or parameter set error or firmware update is running	Check the fieldbus parameters and the PLC configuration Check if the station's start-up setup matches the actual station setup
Maintenance	MT	**Yellow**: Error in the system bus or fieldbus error	Check that the modules have been snapped into place properly
Connection/active	L/A X1	**Green / Yellow**[1)]: Connection established between port X1 of the coupler and another field device	
		Green flashing / Yellow flashing[1)]: Data being exchanged on port X1	
Connection/active	L/A X2	**Green / Yellow**[1)]: Connection established between port X2 of the coupler and another field device	
		Green flashing / Yellow flashing[1)]: Data being exchanged on port X2	
Module status	MS	**Red**: More than one module does not fit the start-up configuration or no fieldbus connection	Check if the station's start-up setup matches the actual station setup; restart coupler to define a new start-up configuration
		Red flashing: One module does not fit the start-up configuration or there is a diagnostic alarm on at least one module	Check if the station's start-up setup matches the actual station setup; restart coupler to define a new start-up configuration Read the diagnostic message with the web server or an engineering tool and determine which further actions to take
		Green: Ready for operation	
		Green flashing: Coupler not configured	Check the fieldbus parameters and the PLC configuration
		Red/green flashing: LED self test during start	Please wait
Network status	NS	**Off:** No IP address assigned	Assign IP address
		Red: IP address conflict	Check the IP address
		Red flashing: Timeout of the exclusive owner connection	Check the fieldbus parameters and the PLC configuration
		Green: At least one EtherNet/IP connection is established	
		Green flashing: no EtherNet/IP connection is established	Check the fieldbus parameters and the PLC configuration
		Red/green flashing: LED self test during start	Please wait
Supply voltage	4.1	**Green**: Supply voltage > 17 V DC	
	4.2	**Red**: Supply voltage < 17 V DC	Check the supply voltage

1) Green: transfer rate 100 Mbps; Yellow: transfer rate 10 Mbps

Coupler/indicator	LED	Status	Recommended action
UR20-FBC-PN-SL-4DIO			
Module status	MS	**Off**: No supply voltage	Check the supply voltage
		Green: Device in operation	
		Green flashing (2 Hz): Profinet addressing	
		Yellow: Booting, HW initialisation	
		Red: – Module diagnosis – HW error – Supply error – Configuration error – Module removed	
		Red flashing (4 Hz): Station is in force mode or firmware update running	
Network status	NS	**Off**: No power supply	Check the supply voltage
		Green: Data exchange established	
		Green flashing (2 Hz): Profinet addressing	
		Red: – No data connection, – data exchange failed	
		Red flashing (1 Hz): configuration error,	
Activity	A1	**Yellow**: Data being exchanged on port 1	
Connection	L1	**Off**: No connection	Check the connection to the next participant and the fieldbus cable
		Green: Connection established between port 1 of the coupler and another field device	
Activity	A2	**Yellow**: Data being exchanged on port 2	
Connection	L2	**Off**: No connection	Check the connection to the next participant and the fieldbus cable
		Green: Connection established between port 2 of the coupler and another field device	
Channel LED	3.1 ... 3.4	**Off**: Channel X inactive **Yellow**: Channel X active	
Output supply voltage	4.1	**Green**: Supply voltage for output current path connected	
	4.2	**Red**: Improper supply voltage for output current path	Check the supply voltage

12.2 I/O modules

Module	LED		Status	Recommended action
Digital input modules				
UR20-4DI-P, UR20-4DI-P-3W, UR20-8DI-P-2W, UR20-8DI-P-3W, UR20-8DI-P-3W-HD, UR20-16DI-P, UR20-2DI-P-TS, UR20-4DI-P-TS, UR20-4DI-N, UR20-8DI-N-3W, UR20-16DI-N UR20-8DI-ISO-2W	Status LED	**Red**:	– Error in supply voltage at input current path – Communication error on the system bus – There is a new diagnostic message	– Check that the module has been snapped into place properly – Check the supply voltage
UR20-16DI-P-PLC-INT UR20-16DI-N-PLC-INT	Status LED	**Red**:	– Error in the supply voltage – Communication error on the system bus – There is a new diagnostic message – Channel error – Error on the supply voltage of the feed-in plug	– Check that the module has been snapped into place properly – Check the supply voltage – Check channel error – Check supply voltage of feed-in plug
	Status LED **off** and all other LEDs **red**:		– Error in the bus coupler power supply	– Check the bus coupler supply voltage
	Channel LED 4.1	**Green**:	– Supply voltage feed-in plug > 18 V DC	
	4.2	**Red**:	– Error on the supply voltage of the feed-in plug	– Check supply voltage of feed-in plug
UR20-4DI-2W-230V-AC	Status LED	**Red**:	– Error in the supply voltage – Communication error on the system bus – There is a new diagnostic message	– Check that the module has been snapped into place properly – Check the supply voltage
	Channel LED 1.1 ... 4.1	**Yellow**:	– Input active	
Digital output modules				
UR20-4DO-P, UR20-4DO-P-2A, UR20-4DO-PN-2A, UR20-8DO-P, UR20-8DO-P-2W-HD, UR20-16DO-P, UR20-4DO-N, UR20-4DO-N-2A, UR20-8DO-N, UR20-16DO-N	Status LED	**Red**:	– Error in supply voltage at output current path – Communication error on the system bus – There is a new diagnostic message – At least one output overloaded	– Check that the module has been snapped into place properly – Check the supply voltage – Eliminate the overload/short circuit
UR20-16DO-P-PLC-INT, UR20-16DO-N-PLC-INT	Status LED	**Red**:	– Error in the supply voltage – Communication error on the system bus – There is a new diagnostic message – Channel error – Error on the supply voltage of the feed-in plug	– Check that the module has been snapped into place properly – Check the supply voltage – Check channel error – Check supply voltage of feed-in plug
	Status LED **off** and all other LEDs **red**:		– Error in the bus coupler power supply	– Check the bus coupler supply voltage
	Channel LED 4.1	**Green**	– Supply voltage feed-in plug > 18 V DC	
	4.2	**Red**:	– Error on the supply voltage of the feed-in plug	– Check supply voltage of feed-in plug
UR20-4DO-ISO-4A	Status LED	**Red**:	– Error in supply voltage at input current path – Communication error on the system bus – There is a new diagnostic message	– Check that the module has been snapped into place properly – Check the supply voltage
	Channel LED 1.2	**Red**:	– Error channel 0	
	2.2	**Red**:	– Error channel 1	
	3.2	**Red**:	– Error channel 2	
	4.2	**Red**:	– Error channel 3	

Module	LED		Status	Recommended action
UR20-8DIO-P-3W-DIAG	Status LED	**Red**:	– Error in supply voltage at output current path – Communication error on the system bus – There is a new diagnostic message	– Check that the module has been snapped into place properly – Check the supply voltage
	Channel LED 1.1	**Yellow**:	– Status DI/DO channel 0	
	1.2	**Red**:	– Overload or no load (line break) output 0	– Check the configuration – Check the load and the wiring
	1.3	**Red**:	– Overload of sensor supply connector 1 – Overload or no load (line break) output 1	– Check the configuration – Check the load and the wiring – Check the sensor
	1.4	**Yellow**:	– Status DI/DO channel 1	
	2.1	**Yellow**:	– Status DI/DO channel 2	
	2.2	**Red**:	– Overload or no load(line break) output 2	– Check the configuration – Check the load and the wiring
	2.3	**Red**:	– Overload of sensor supply connector 2 – Overload or no load (line break) output 3	– Check the configuration – Check the load and the wiring – Check the sensor
	2.4	**Yellow**:	– Status DI/DO channel 3	
	3.1	**Yellow**:	– Status DI/DO channel 4	
	3.2	**Red**:	– Overload or no load (line break) output 4	– Check the configuration – Check the load and the wiring
	3.3	**Red**:	– Overload of sensor supply connector 3 – Overload or no load (line break) output 5	– Check the configuration – Check the load and the wiring – Check the sensor
	3.4	**Yellow**:	– Status DI/DO channel 5	
	4.1	**Yellow**:	– Status DI/DO channel 6	
	4.2	**Red**:	– Overload or no load (line break) output 6	– Check the configuration – Check the load and the wiring
	4.3	**Red**:	– Overload of sensor supply connector 4 – Overload or no load (line break) output 7	– Check the configuration – Check the load and the wiring – Check the sensor
	4.4	**Yellow**:	– Status DI/DO channel 7	
Digital relay output modules				
UR20-4RO-SSR-255, **UR20-4RO-CO-255**	Status LED	**Red**:	– Error in supply voltage at output current path – Communication error on the system bus – There is a new diagnostic message	– Check that the module has been snapped into place properly – Check the supply voltage
Pulse-width modulation modules				
UR20-2PWM-PN-0.5A, **UR20-2PWM-PN-0.5A-V2** **UR20-2PWM-PN-2A** **UR20-2PWM-PN-2A-V2**	Status LED	**Red**:	– Error in supply voltage at output current path – Communication error on the system bus – There is a new diagnostic message – At least one output overloaded	– Check that the module has been snapped into place properly – Check the supply voltage – Eliminate the overload/short circuit
UR20-2PWM-I-2.5A-2DI-P	Status-LED	**red**	– Error in the supply voltage Output current path – Communication error on system bus – Diagnostic message is present – At least one output overloaded	– Check module for correct engagement – Check the supply voltage – Remove overload/short circuit
	Channel LED 1.1	**yellow**	– Input 0 active	

Module	LED		Status	Recommended action
	1.3	**red**	– Sensor supply overload connector 1	– Check the wiring. The sensor supply will restart automatically as soon as the fault has been rectified.
	2.1	**yellow**	– Input 1 active	
	2.3	**red**	– Sensor supply overload connector 2	– Check the wiring. The sensor supply will restart automatically as soon as the fault has been rectified.
	3.1	**green**	– Current controller active channel A	
	3.3	**red**	– Error channel A	– Check wiring. Then switch off the controller enable and switch it on again.
	3.4	**yellow**	– Dithering active channel A	
	4.1	**green**	– Current controller active channel B	
	4.3	**red**	– Error channel B	– Check wiring. Then switch off the controller enable and switch it on again.
	4.4	**yellow**	– Dithering active channel B	
Stepper motor module				
UR20-1SM-50W-6DI2DO-P	Status-LED	**Red**:	– Error in supply voltage at input current path – Communication error on the system bus – There is a new diagnostic message: Parameter or moving limit exceeded (speed, accellaration, range)	– Check that the module has been snapped into place properly – Check the supply voltage – Check the parameters and the traversing range and adjust them if needed
	Channel LED			
	1.1	**Yellow**:	– Input 0 active	
	1.4	**Yellow**:	– Input 1 active	
	2.1	**Yellow**:	– Input 2 active	
	2.4	**Yellow**:	– Input 3 active	
	3.1	**Yellow**:	– Input 4 active	
	3.4	**Yellow**:	– Input 5 active	
	4.1	**Yellow**:	– Output 0 active	
	4.4	**Yellow**:	– Output 1 active	
	7.1	**Yellow**:	– Phase A active	
	7.2	**Red**:	– Error Phase A: Short circuit in the motor driver – Motor driver themally overloaded	– Eliminate the short circuit – Regard the derating curves in the technical data
	7.3	**Yellow**:	– Phase B active	
	7.4	**Red**:	– Error Phase B: Short circuit in the motor driver – Motor driver themally overloaded	– Eliminate the short circuit – Regard the derating curves in the technical data
	8.1	**Green**:	– External supply voltage OK	
	8.2	**Red**:	– Error external supply voltage: Voltage out of the permitted range	– Check the external supply voltage

Module	LED	Status	Recommended action
Analogue input modules			
UR20-2AI-UI-16, UR20-4AI-UI-16, UR20-4AI-UI-16-HD, UR20-4AI-UI-12	Status LED **Red**:	– Error in supply voltage at input current path – Communication error on the system bus – There is a new diagnostic message – Channel error – Firmware error	– Check that the module has been snapped into place properly – Check the supply voltage – Check channel error – Check firmware, update firmware as nessecary
	Status LED off and all other LEDs **red**:	Error in the bus coupler power supply	Check the bus coupler supply voltage
	Channel LED **Red**: 1.1 ... 4.1	– Channel error	– Check channel error
UR20-2AI-UI-16-DIAG, UR20-4AI-UI-16-DIAG, UR20-4AI-UI-16-DIAG-HD	Status LED **Red**:	– Error in supply voltage at input current path – Communication error on the system bus – There is a new diagnostic message – Channel error – Firmware error	– Check that the module has been snapped into place properly – Check the supply voltage – Check channel error – Check firmware, update firmware as nessecary
	Status LED off and all other LEDs **red**:	Error in the bus coupler power supply	Check the bus coupler supply voltage
	Channel LED **Red**: 1.1 ... 4.1	– Parameter error – Line break – Upper or lower limit exceeded – System bus cannot be accessed (e.g. caused by interruption of the bus coupler power supply)	– Check the parameterisation – Check the wiring – Check the input signal – Check the bus coupler supply voltage
	1.3 ... 4.3 **Red**:	– +24 V short circuit – +24 V line break	– Check the wiring
UR20-4AI-UI-ISO-16-DIAG	Status LED **Red**:	– Error in supply voltage at input current path – Communication error on the system bus – There is a new diagnostic message	– Check that the module has been snapped into place properly – Check the supply voltage
	Channel LED **Red**: 1.4 ... 4.4	– Channel error	– Check for overvoltage/overcurrent or wirebreak
UR20-8AI-I-16-DIAG	Status LED **Red**:	– Error in supply voltage at output current path – Communication error on the system bus – There is a new diagnostic message – At least one output overloaded	– Check that the module has been snapped into place properly – Check the supply voltage – Eliminate the overload/short circuit
	Channel LED **Red**: 1.1 ... 4.1 1.3 ... 4.3	– Channel error	– Check channel error
UR20-8AI-I-16-HD, UR20-8AI-I-16-DIAG-HD	Status LED **Red**:	– Error in supply voltage at output current path – Communication error on the system bus – There is a new diagnostic message – At least one output overloaded	– Check that the module has been snapped into place properly – Check the supply voltage – Eliminate the overload/short circuit
	Channel LED **Red**: 1.1 ... 8.1	– Channel error	– Check channel error
UR20-8AI-I-PLC-INT	Status LED **Red**:	– Error in the supply voltage – Communication error on the system bus – There is a new diagnostic message – Channel error – Error on the supply voltage of the feed-in plug	– Check that the module has been snapped into place properly – Check the supply voltage – Check channel error – Check supply voltage of feed-in plug
	Status LED **off** and all other LEDs **red**:	– Error in the bus coupler power supply	– Check the bus coupler supply voltage
	Channel LED **Red**: 1.0 ... 1.7	– Input signal outside permissible range – System bus cannot be accessed (e.g. caused by interruption of the bus coupler power supply)	– Check the input signal – Check the bus coupler supply voltage
	4.1 **Green**:	Supply voltage feed-in plug > 18 V DC	
	4.2 **Red**:	Error on the supply voltage of the feed-in plug	– Check supply voltage of feed-in plug
	4.4 **Red**:	– Fuse for the sensor supply has been triggered	– Check the load connected to the sensor supply

Module	LED		Status	Recommended action
UR20-4AI-TC-DIAG **UR20-4AI-RTD-HP-DIAG** **UR20-4AI-RTD-DIAG**	Status LED	**Red**:	– Error in supply voltage at input current path – Communication error on the system bus – There is a new diagnostic message – Channel error – Firmware error	– Check that the module has been snapped into place properly – Check the supply voltage – Check channel error – Check firmware, update firmware as nessecary
	Status LED **off** and all other LEDs **red**:		– Error in the bus coupler power supply	– Check the bus coupler supply voltage
	Channel LED 1.1 ... 4.1	**Red**:	– Input signal outside the permissible range – Line break – Cold-junction compensation error (UR20-4AI-TC-DIAG only) – System bus cannot be accessed (e.g. caused by interruption of the bus coupler power supply)	– Check the input signal, the cabling and, if necessary, the sensor for external cold-junction compensation. – Check the bus coupler supply voltage
UR20-4AI-UI-DIF-16-DIAG **UR20-4AI-UI-DIF-32-DIAG**	Status LED	**Red**:	– Error in supply voltage at input current path – Communication error on the system bus – There is a new diagnostic message – Channel error – Firmware error	– Check that the module has been snapped into place properly – Check the supply voltage – Check channel error – Check firmware, update firmware as necessary
	Channel LED 1.1 ... 4.1	**Red**:	– Line break or permissable range exceeded	– Check the wiring
	1.3 ... 4.3	**Red**:	– Line break or short circuit in the sensor supply	– Check the wiring – Check the sensor supply
UR20-4AI-R-HS-16-DIAG	Status LED	**Red**:	– Error in supply voltage at input current path – Communication error on the system bus – There is a new diagnostic message	– Check that the module has been snapped into place properly – Check the supply voltage
	Channel LED 1.1	**Red**:	– Line break channel 0	– Check the wiring
	2.1	**Red**:	– Line break channel 1	– Check the wiring
	3.1	**Red**:	– Line break channel 2	– Check the wiring
	4.1	**Red**:	– Line break channel 3	– Check the wiring
UR20-4AI-I-HART-16-DIAG	Status LED	**Red**:	– Error in supply voltage at input current path – Communication error on the system bus – There is a new diagnostic message – Channel error – Firmware error	– Check that the module has been snapped into place properly – Check the supply voltage – Check channel error – Check firmware, update firmware as nessecary
		off:	– Eror in the bus coupler power supply	– Check the bus coupler supply voltage
	Channel LED 1.1 ... 4.1	**Red**:	– Input signal outside permissible range – No HART device detected	– Check the input signal – Check the HART device connection
		Yellow:	– HART communication active	
		Yellow flashing:	– Scanning for HART device	– Please wait
	1.3 ... 4.3	**Red**:	– Short circuit in the 24 V DC supply – Line break AI	– Check the 24 V DC connection – Check the input connection

Module	LED		Status	Recommended action
UR20-4AI-I-HART-ISO-16	Status LED	**Red**:	– Error in supply voltage at input current path – Communication error on the system bus – There is a new diagnostic message – Channel error – Firmware error	– Check that the module has been snapped into place properly – Check the supply voltage – Check channel error – Check firmware, update firmware as nessecary
		off:	– Eror in the bus coupler power supply	– Check the bus coupler supply voltage
	Channel LED 1.1 ... 4.1	**Red**:	– Input signal outside permissible range – No HART device detected – Line break AI	– Check the input signal – Check the HART device connection – Check the input connection
	1.3 ... 4.3	**Yellow**:	– HART communication active	
		Yellow flashing:	– Scanning for HART device	– Please wait
UR20-8AI-RTD-DIAG-2W	Status LED	**Red**:	– Error in supply voltage at output current path – Communication error on the system bus – There is a new diagnostic message	– Check that the module has been snapped into place properly – Check the supply voltage
	Channel LED 1.1	**Red**:	Input 0 signal outside the permissable range, line break or short circuit	– Check the input signal and the wiring
	1.2	**Red**:	Input 1 signal outside the permissable range, line break or short circuit	– Check the input signal and the wiring
	2.1	**Red**:	Input 2 signal outside the permissable range, line break or short circuit	– Check the input signal and the wiring
	2.2	**Red**:	Input 3 signal outside the permissable range, line break or short circuit	– Check the input signal and the wiring
	3.1	**Red**:	Input 4 signal outside the permissable range, line break or short circuit	– Check the input signal and the wiring
	3.2	**Red**:	Input 5 signal outside the permissable range, line break or short circuit	– Check the input signal and the wiring
	4.1	**Red**:	Input 6 signal outside the permissable range, line break or short circuit	– Check the input signal and the wiring
	4.2	**Red**:	Input 7 signal outside the permissable range, line break or short circuit	– Check the input signal and the wiring
UR20-15AI-U-16-DIAG	Status LED	**Red**:	– Error in supply voltage at output current path – Communication error on the system bus – There is a new diagnostic message	– Check that the module has been snapped into place properly – Check the supply voltage
	Channel LED 1.1 ... 4.3	**Red**:	– Channel error	– Check channel error
	4.4	**Yellow**:	– Bridge activated	
UR20-2AI-SG-24-DIAG	Status LED	**Red**:	– Error in supply voltage at input current path – Communication error on the system bus – There is a new diagnostic message	– Check that the module has been snapped into place properly – Check the supply voltage
	Channel LED 1.1	**Red**:	– Diagnostic message input 0	– Check the wiring
	2.3	**Yellow**:	– Digital input (Tare) 0 active	
	3.1	**Red**:	– Diagnostic message input 1	– Check the wiring
	4.3	**Yellow**:	– DigitalInput (Tare) 1 active	

Module	LED		Status	Recommended action
UR20-3EM-230V-AC	Status LED	**Red**:	– Error in supply voltage at input current path – Communication error on the system bus – There is a new diagnostic message	– Check that the module has been snapped into place properly – Check the supply voltage
	Channel LED 2.2	**Yellow:**	– Voltage >70 V at L1	
	2.3	**Red**:	– Nominal input current (1 A / 5 A) or parameterised limit exceeded	– Check the feed-in current – Check the parameterised limit – Check whether the connections (1 A and 5 A) have been mixed up – Install a shunt
	2.4	**Red**:	– Nominal input voltage (300 V) or parameterised limit exceeded	– Check the voltage – Check the parameterised limit
	Channel LED 3.2	**Yellow:**	– Voltage >70 V at L2	
	3.3	**Red**:	– Nominal input current (1 A / 5 A) or parameterised limit exceeded	– Check the feed-in current – Check the parameterised limit – Check whether the connections (1 A and 5 A) have been mixed up – Install a shunt
	3.4	**Red**:	– Nominal input voltage (300 V) or parameterised limit exceeded	– Check the voltage – Check the parameterised limit
	Channel LED 4.2	**Yellow:**	– Voltage >70 V at L3	
	4.3	**Red**:	– Nominal input current (1 A / 5 A) or parameterised limit exceeded	– Check the feed-in current – Check the parameterised limit – Check whether the connections (1 A and 5 A) have been mixed up – Install a shunt
	4.4	**Red**:	– Nominal input voltage (300 V) or parameterised limit exceeded	– Check the voltage – Check the parameterised limit
Analogue output modules				
UR20-2AO-UI-16, **UR20-2AO-UI-16-DIAG,** **UR20-2AO-UI-ISO-16-DIAG,** **UR20-4AO-UI-16,** **UR20-4AO-UI-16-M,** **UR20-4AO-UI-16-DIAG,** **UR20-4AO-UI-16-M-DIAG,** **UR20-4AO-UI-16-HD,** **UR20-4AO-UI-16-DIAG-HD**	Status LED	**Red**:	– Error in the supply voltage – Communication error – Channel error	– Check that the module has been snapped into place properly. – Check the supply voltage – Check the channel error
	Status LED **off** and all other LEDs **red**:		– Error in the bus coupler power supply	– Check the bus coupler supply voltage
	Channel LED 1.1 ... 4.1	**Red**:	– Overload in voltage mode – Broken line in current mode – System bus cannot be accessed (e.g. caused by interruption of the bus coupler power supply)	– Check the connected load, – Check the cabling, – Check the bus coupler supply voltage
Digital counter modules				
UR20-1CNT-100-1DO, **UR20-2CNT-100,** **UR20-2FCNT-100,** **UR20-1CNT-500**	Status LED	**Red**:	– Error in supply voltage at input current path – Communication error on the system bus – There is a new diagnostic message	– Check that the module has been snapped into place properly – Check the supply voltage
Digital interface modules				
UR20-1SSI	Status LED	**Red**:	– Error in supply voltage at input current path – Communication error on the system bus – There is a new diagnostic message	– Check that the module has been snapped into place properly – Check the supply voltage
	Channel LED 4.1	**Green**:	– Supply voltage sensor 5 V DC	
	4.3	**Green**:	– Supply voltage sensor 24 V DC	

Module	LED		Status	Recommended action
Communication modules				
UR20-1COM-232-485-422	Status LED	**Red**:	– Erroor in the supply voltage at input current path – Communication error on the system bus – There is a new diagnostic message	– Check that the module has been snapped into place properly – Check the supply voltage
	Channel LED 1.1, 1.2	**Yellow:**	RS232 has been parameterised	
	1.1	**Yellow flashing:**	Receiving data (RS232)	
	1.2	**Yellow flashing:**	Transmitting data (RS232)	
	3.1 ... 3.4	**Yellow:**	RS422 has been parameterised	
	3.1, 3.2 3.3, 3.4	**Off** **Yellow:**	RS485 has been parameterised	
	3.3	**Yellow flashing**:	Receiving data (RS485 or RS 422)	
	3.4	**Yellow flashing**:	Transmitting data (RS485 or RS 422)	
	4.1	**Green**:	Supply voltage OK (5 V DC)	
	4.3	**Green**:	Supply voltage OK (24 V DC)	
UR20-1COM-232-485-422-V2	Status LED	**Red**:	– Error in the supply voltage at input current path – Communication error on the system bus – There is a new diagnostic message	– Check that the module has been snapped into place properly – Check the supply voltage
	Channel LED 1.1	**Yellow:**	Data at receiving buffer	
	1.2	**Yellow:**	Data at sending buffer	
	1.3	**Red:**	Communication error	See table “diagnostic data”
	1.4	**Yellow:**	RS232 is parameterised	
	3.1	**Yellow:**	RS422 is parameterised	
	3.3	**Yellow:**	RS485 or RS422 is parameterised	
	4.1	**Green**:	Supply voltage OK (5 V DC)	
	4.3	**Green**:	Supply voltage OK (24 V DC)	
UR20-1COM-SAI-PRO **UR20-1COM-SAI-PRO-V2**	Status LED	**Red**:	– Error in the supply voltage at input current path – Communication error on the system bus – There is a new diagnostic message	– Check that the module has been snapped into place properly – Check the supply voltage
	Channel LED 3.1	**Yellow flashing (0.5 Hz)**:	– Subbus communication is being initialised	– Please wait
		Yellow:	– Subbus communication OK	
	3.2	**Red**:	– Supply voltage error	– Check the power supply unit and the cabling
	3.3	**Green**:	– Supply voltage OK	
	3.4	**Red**:	– Subbus communication error	– Check the connected subbus modules and sensors

Module	LED		Status	Recommended action
UR20-1COM-CANOPEN Manager mode and device mode	Status LED	**Red**	– Erroor in the supply voltage at input current path – Communication error on the system bus – There is a new diagnostic message	– Check that the module has been snapped into place properly – Check the supply voltage
	Channel LED 3.1	**Green**	Device in status OPERATIONAL	
		Green blinking	Device in status PRE-OPERATIONAL	
		Green single flash	Device in status STOPPED	
	3.2	**Off**	Device is running	
		Red blinking	Configuration error	– Check the configuration
		Red single flash	At least one error counter of the CAN controller has reached the warning level. Can lead to bus-off if the cause of error is not eliminated.	– Check that the CAN subbus cabling is not interrupted – Check that the CAN subbus cabling of CAN_H and CAN_L is not interchanged – Check the CAN subbus cabling for EMS compatible installation and earthing – Check the baud rate
		Red double flash	Guard event or heartbeat event	A CAN bus participant has not sent a **heartbeat** in time or has not responded to a **Guard Request**. – If heartbeat is enabled: in object 1016 **Consumer heart beat time** in the UR20-1COM-CANOPEN check the entry for the affected CANopen node – If heartbeat is enabled: check object 1017 **Producer heart beat time** in the affected CANopen node – If Node-Guarding is enabled: check the assigned **Guard Time** in object 1F81 **NMT slave assignment** – Check that the affected device is switched on and working – Check the CAN subbus cabling of the affected device
		Red quadruple flash	An expected PDO has not been received before the event-timer elapsed.	– Check that the **PDO communication parameter** of the affected PDO match between **PDO producer** and **PDO consumer** – Check that the device with the **PDO consumer** role is switched on and working.
		Red	Bus-off	– Check the CAN subbus connections and cabling – Check that the CAN subbus cabling is not interrupted – Check that the CAN subbus cabling of CAN_H and CAN_L is not interchanged – Check the CAN subbus cabling for EMS compatible installation and earthing – Check the baud rate

Module	LED		Status	Recommended action
UR20-1COM-CANOPEN Transparent mode and listen only mode	Status LED	**Red**	– Error in the supply voltage at input current path – Communication error on the system bus – There is a new diagnostic message	– Check that the module has been snapped into place properly – Check the supply voltage
	Channel LED 3.1	**Off**	There is no RX data in the buffer	
		Green	There is RX data in the buffer	
	3.2	**Off**	There is no TX data in the buffer	
		Red	There is TX data in the buffer	
UR20-1COM-CAN	Status LED	**Red**	– Error in the supply voltage at input current path – Communication error on the system bus – There is a new diagnostic message	– Check that the module has been snapped into place properly – Check the supply voltage
	Channel LED 3.1	**Off**	There is no RX data in the buffer	
		Green	There is RX data in the buffer	
	3.2	**Off**	There is no TX data in the buffer	
		Red	There is TX data in the buffer	
UR20-4COM-IO-LINK	Status-LED	**Red**:	– Error in the supply voltage at input current path – Communication error on the system bus – Configuration error – There is a new diagnostic message	– Check that the module has been snapped into place properly – Check the supply voltage – Check the configuration
	Channel-LED 1.1 ... 4.1	**Yellow**:	– Status COM 1 ... COM 4	
	1.2 ... 4.2	**Red**:	– Error IO-Link port 1 ... IO-Link port 4	– Check the cabling – Check the configuration
	1.4 ... 4.4	**Yellow**:	– Status DI 0	
UR20-4COM-IO-LINK-V2	Status-LED	**Red**:	– Error in the supply voltage at input current path – Communication error on the system bus – Configuration error – There is a new diagnostic message	– Check that the module has been snapped into place properly – Check the supply voltage – Check the configuration
	Channel-LED 1.1 ... 4.1	**Yellow**:	– Status COM 1 ... COM 4	
	1.2 ... 4.2	**Red**:	– Error IO-Link port 1 ... IO-Link port 4	– Check the cabling – Check the configuration
	1.4 ... 4.4	**Yellow**:	– Status DI 1 ... DI 4	
UR20-PF-I				
	Status LED	**Red**:	– Channel error or communication error on the system bus, or there is an error in the supply voltage	– Check that the module has been snapped into place properly – Check the channel error, check the supply voltage
	3.2	**Red**:	– Supply voltage of the feed-in plug < 18 V DC	Check the supply voltage of the feed-in plug
	3.4	**Red**:	– Damage of internal fuse	– replace module
UR20-PF-O				
	Status LED	**Red**:	– Channel error or communication error on the system bus, or there is an error in the supply voltage	– Check that the module has been snapped into place properly – Check the channel error, check the supply voltage
	4.1	**Red**:	– Supply voltage of the feed-in plug < 18 V DC	Check the supply voltage of the feed-in plug
	4.2	**Red**:	– Damage of internal fuse	– replace module

Module	LED		Status	Recommended action
Potential distribution modules				
UR20-16AUX-I **UR20-16AUX-GND-I**	Status LED	**Red**:	– Error on the supply voltage of the input path	– Check that the module has been snapped into place properly – Check the supply voltage
UR20-16AUX-O **UR20-16AUX-GND-O**	Status LED	**Red**:	– Error on the supply voltage of the output path	– Check that the module has been snapped into place properly – Check the supply voltage
UR20-16AUX-FE	Status LED	**Off**:	No supply voltage	– Check that the module has been snapped into place properly
Safe I/O modules see "Modules for functional safety manual"				

13 Accessories and replacement parts

13.1 Accessories

Item No.	Designation	Purpose
9009030000	Screwdriver SDS 0.4X2.5X75	Unfastening conductors from PUSH IN contacts
9008320000	Screwdriver SDS 0.5X3.0X80	Assembling/disassembling an end bracket
1323700000	PM 2.7/2.6 MC SDR marker	Connection marker for a pusher, with custom printing to customer specifications
1323710000	PM 2.7/2.6 MC NE WS marker	Connection marker for a pusher, unprinted
1341610000	DEK 5/8-11.5 MC SDR marker	Module marker with custom printing to customer specifications
1341630000	DEK 5/8-11.5 MC NE WS marker	Module marker, unprinted
1339920000	UR20-SM-ACC swivel marker	Pivoting holder for module markers
1429420000	White thermal-transfer label for swivel markers	Can be printed with thermal-transfer printers
1429910000	Yellow thermal-transfer labels for swivel markers	Can be printed with thermal-transfer printers
1429430000	Paper labels for swivel markers	Can be printed with laser printers
1806120000	Tag holder EM 8/30 for end bracket marker	Marks the station at the end bracket
1045570000	Marker ELS 6/30, white, PA 66	Marking end brackets, can be printed with Weidmüller PrintJet ADVANCED
1045580000	Marker ELS 6/30, yellow, PA 66	Marking end brackets, can be printed with Weidmüller PrintJet ADVANCED
2009980000	Marker ELS 6/30 MM, white, polyester	Marking end brackets, can be printed with Weidmüller THM MMP
2010620000	Marker ELS 6/30 MM, yellow, polyester	Marking end brackets, can be printed with Weidmüller THM MMP
1607720000	Labels ESO 7 white, paper	Marking end brackets, can be printed with laser printers
1634780000	Labels ESO 7 yellow, paper	Marking end brackets, can be printed with laser printers
1670390000	Labels ESO 7 P white, polyester	Marking end brackets, can be printed with laser printers
1670400000	Labels ESO 7 P yellow, polyester	Marking end brackets, can be printed with laser printers
1483050000	KOSM BHZ5.00 coding elements	Coding element for customised module coding
1346610000	UR20-EBK-ACC termination kit	Set with two end brackets and one end plate
1805610000	MEW 35/1 end bracket for vertical installation	Reinforced end bracket required in addition to terminal kit for vertical installation
1469340000	HD-Plug UR20-PG0.35	Plug for HD-modules (8 pieces per package)
1919990000	PCB plug-in connector BLDZ DN5.08/05/180F GY BX PRT	5-pole female connector for fieldbus connection UR20-FBC-DN (10 wire connections)
1933550000	PCB plug-in connector BLZ DN 5.08/05/180F AU GY BX PRT	5-pole female connector for fieldbus connection UR20-FBC-DN (5 wire connections)
9202210000	multi-stripax 6-16	Stripping tool for conductors to be used with HD-Plugs
1525820000	Pressing tool PWZ-UR20-HD	Pressing tool for fixing HD-Plugs
1487980000	IE-USB-A-MICRO-1.8M	Connecting line, USB A to USB Micro, sheath material PVC, 1.8 m

13.2 Replacement parts

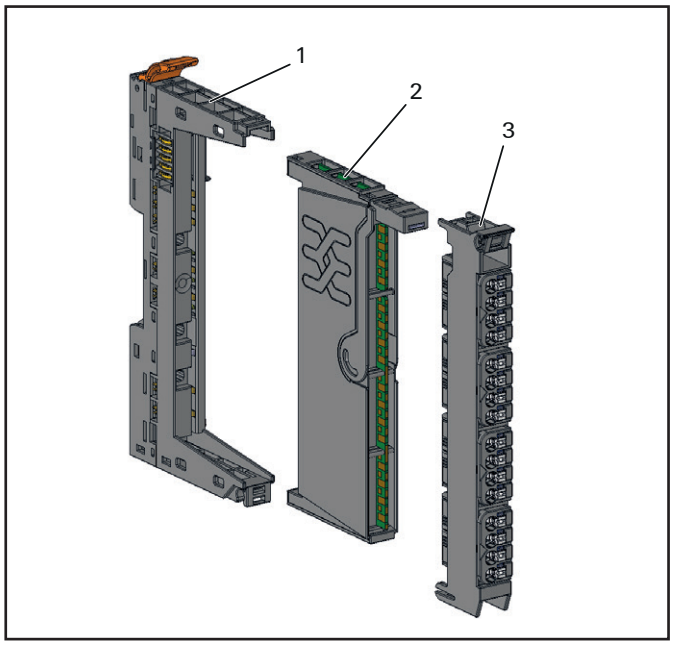

1 Base module (BM)
2 Electronic unit (EM)
3 Plug-in unit (PK)

UR20-1SM-50W-6DI2DO-P

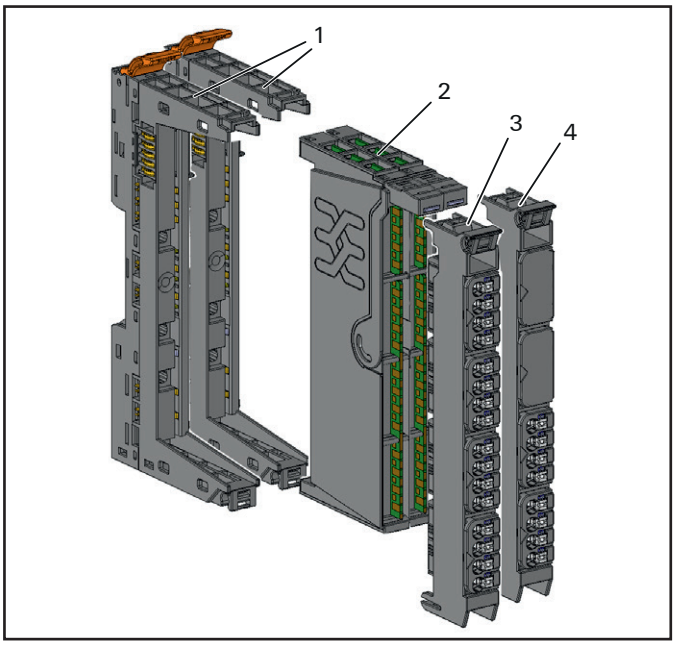

1 Base modules (BM)
2 Electronic unit (EM)
3 Plug-in unit PK1
4 Plug-in unit PK2

Replacement parts for couplers

Coupler	Item No.	Plug-in unit	Item No.
UR20-FBC-PB-DP	1334870000	UR20-PK-1334870000-SP	1346580000
UR20-FBC-PB-DP-V2	2614380000	UR20-PK-2614380000-SP	2623120000
UR20-FBC-PN-IRT	1334880000	UR20-PK-1334880000-SP	1484120000
UR20-FBC-PN-IRT-V2	2566380000	UR20-PK-2566380000-SP	2623640000
UR20-FBC-MOD-TCP	1334930000	UR20-PK-1334930000-SP	1484130000
UR20-FBC-MOD-TCP-V2	2476450000	UR20-PK-2476450000-SP	2485280000
UR20-FBC-EC	1334910000	UR20-PK-1334910000-SP	1484440000
UR20-FBC-EIP	1334920000	UR20-PK-1334920000-SP	1541290000
UR20-FBC-EIP-V2	1550550000	UR20-PK-1550550000-SP	2780340000
UR20-FBC-DN	1334900000	UR20-PK-1334900000-SP	2003540000
UR20-FBC-CAN	1334890000	UR20-PK-1334890000-SP	2003530000
UR20-FBC-PL	1334940000	UR20-PK-1334940000-SP	2425170000
UR20-FBC-IEC61162-450	2661310000	UR20-PK-2661310000-SP	2680540000
UR20-FBC-CC	2625010000	UR20-PK-2625010000-SP	2625060000
UR20-FBC-CC-TSN	2680260000	UR20-PK-2680260000-SP	2699160000
UR20-FBC-PN-ECO	2659680000	–	
UR20-FBC-MOD-TCP-ECO	2659690000	–	
UR20-FBC-EC-ECO	2659700000	–	
UR20-FBC-EIP-ECO	2799510000	–	

Replacement parts for modules

Module	Item No.	Base module Item No.	Electronic unit Item No.	Plug-in unit Item No.
UR20-4DI-P	1315170000	UR20-BM-SP 1350930000	UR20-EM-1315170000-SP 1346640000	UR20-PK-1315170000-SP 1346440000
UR20-4DI-P-3W	2009360000	UR20-BM-SP 1350930000	UR20-EM-2009360000-SP 2011260000	UR20-PK-2009360000-SP 2011240000
UR20-8DI-P-2W	1315180000	UR20-BM-SP 1350930000	UR20-EM-1315180000-SP 1490220000	UR20-PK-1315180000-SP 1346430000
UR20-8DI-P-3W	1394400000	UR20-BM-SP 1350930000	UR20-EM-1394400000-SP 1434220000	UR20-PK-1394400000-SP 1411430000
UR20-8DI-P-3W-HD	1315190000	UR20-BM-SP 1350930000	UR20-EM-1315190000-SP 1346670000	UR20-PK-1315190000-SP 1518800000
UR20-16DI-P	1315200000	UR20-BM-SP 1350930000	UR20-EM-1315200000-SP 1346680000	UR20-PK-1315200000-SP 1346400000
UR20-16DI-P-PLC-INT	1315210000	UR20-BM-SP 1350930000	UR20-EM-1315210000-SP 1346690000	UR20-PK-1315210000-SP 1346590000
UR20-2DI-P-TS	1460140000	UR20-BM-SP 1350930000	UR20-EM-1460140000-SP 1463690000	UR20-PK-1460140000-SP 1484110000
UR20-4DI-P-TS	1460150000	UR20-BM-SP 1350930000	UR20-EM-1460150000-SP 1463680000	UR20-PK-1460150000-SP 1484430000
UR20-4DI-N	1315350000	UR20-BM-SP 1350930000	UR20-EM-1315350000-SP 1346870000	UR20-PK-1315350000-SP 1559770000
UR20-8DI-N-3W	1315370000	UR20-BM-SP 1350930000	UR20-EM-1315370000-SP 1346880000	UR20-PK-1315370000-SP 1559780000
UR20-16DI-N	1315390000	UR20-BM-SP 1350930000	UR20-EM-1315390000-SP 1346920000	UR20-PK-1315390000-SP 1559790000
UR20-16DI-N-PLC-INT	1315400000	UR20-BM-SP 1350930000	UR20-EM-1315400000-SP 1346930000	UR20-PK-1315400000-SP 1559800000
UR20-4DI-2W-230V-AC	1550070000	UR20-BM-SP 1350930000	UR20-EM-1550070000-SP 1558880000	UR20-PK-1550070000-SP 1559820000
UR20-8DI-ISO-2W	2457240000	UR20-BM-SP 1350930000	UR20-EM-2457240000-SP 2545780000	UR20-PK-2457240000-SP 2545760000
UR20-8DIO-P-3W-DIAG	2456530000	UR20-BM-SP 1350930000	UR20-EM-2456530000-SP 2593330000	UR20-PK-2456530000-SP 2593320000
UR20-4DO-P	1315220000	UR20-BM-SP 1350930000	UR20-EM-1315220000-SP 1346700000	UR20-PK-1315220000-SP 1483960000
UR20-4DO-P-2A	1315230000	UR20-BM-SP 1350930000	UR20-EM-1315230000-SP 1346710000	UR20-PK-1315230000-SP 1483970000
UR20-4DO-PN-2A	1394420000	UR20-BM-SP 1350930000	UR20-EM-1394420000-SP 1480950000	UR20-PK-1394420000-SP 1483980000
UR20-8DO-P	1315240000	UR20-BM-SP 1350930000	UR20-EM-1315240000-SP 1346720000	UR20-PK-1315240000-SP 1346410000
UR20-8DO-P-2W-HD	1509830000	UR20-BM-SP 1350930000	UR20-EM-1509830000-SP 1515450000	UR20-PK-1509830000-SP 1559720000
UR20-16DO-P	1315250000	UR20-BM-SP 1350930000	UR20-EM-1315250000-SP 1346730000	UR20-PK-1315250000-SP 1483990000
UR20-16DO-P-PLC-INT	1315270000	UR20-BM-SP 1350930000	UR20-EM-1315270000-SP 1346740000	UR20-PK-1315270000-SP 1483940000

Replacement parts for modules

Module	Item No.	Base module Item No.	Electronic unit Item No.	Plug-in unit Item No.
UR20-4DO-N	1315410000	UR20-BM-SP 1350930000	UR20-EM-1315410000-SP 1346940000	UR20-PK-1315410000-SP 1559840000
UR20-4DO-N-2A	1315420000	UR20-BM-SP 1350930000	UR20-EM-1315420000-SP 1346950000	UR20-PK-1315420000-SP 1559850000
UR20-8DO-N	1315430000	UR20-BM-SP 1350930000	UR20-EM-1315430000-SP 1346970000	UR20-PK-1315430000-SP 1984770000
UR20-16DO-N	1315440000	UR20-BM-SP 1350930000	UR20-EM-1315440000-SP 1346980000	UR20-PK-1315440000-SP 2000520000
UR20-16DO-N-PLC-INT	1315450000	UR20-BM-SP 1350930000	UR20-EM-1315450000-SP 1346990000	UR20-PK-1315450000-SP 2000540000
UR20-4DO-ISO-4A	2457250000	UR20-BM-SP 1350930000	UR20-EM-2457250000-SP 2545790000	UR20-PK-2457250000-SP 2545770000
UR20-4RO-SSR-255	1315540000	UR20-BM-SP 1350930000	UR20-EM-1315540000-SP 1347120000	UR20-PK-1315540000-SP 1484000000
UR20-4RO-CO-255	1315550000	UR20-BM-SP 1350930000	UR20-EM-1315550000-SP 1347130000	UR20-PK-1315550000-SP 1346500000
UR20-2PWM-PN-0.5A	1315600000	UR20-BM-SP 1350930000	UR20-EM-1315600000-SP 1347180000	UR20-PK-1315600000-SP 1484010000
UR20-2PWM-PN-0.5A-V2	3036960000	UR20-BM-SP 1350930000	UR20-EM-3036960000-SP 3052110000	UR20-PK-3036960000-SP 3052160000
UR20-2PWM-PN-2A	1315610000	UR20-BM-SP 1350930000	UR20-EM-1315610000-SP 1347190000	UR20-PK-1315610000-SP 1346550000
UR20-2PWM-PN-2A-V2	3036950000	UR20-BM-SP 1350930000	UR20-EM-3036950000-SP 3052100000	UR20-PK-3036950000-SP 3052150000
UR20-2PWM-I-2.5A-2DI-P	2697910000	UR20-BM-SP 1350930000	UR20-EM-2697910000-SP 2924720000	UR20-PK-2697910000-SP 2924730000
UR20-1SM-50W-6DI2DO-P	2489830000	UR20-BM-SP 1350930000	UR20-EM-2489830000-SP 2585660000	UR20-PK1-2489830000-SP 2573750000 UR20-PK2-2489830000-SP 2585650000
UR20-2AI-UI-16	2705620000	UR20-BM-SP 1350930000	UR20-EM-2705620000-SP 2788700000	UR20-PK-2705620000-SP 2788710000
UR20-2AI-UI-16-DIAG	2566090000	UR20-BM-SP 1350930000	UR20-EM-2566090000-SP 2568080000	UR20-PK-2566090000-SP 2568070000
UR20-4AI-UI-16	1315620000	UR20-BM-SP 1350930000	UR20-EM-1315620000-SP 1347200000	UR20-PK-1315620000-SP 1484020000
UR20-4AI-UI-16-DIAG	1315690000	UR20-BM-SP 1350930000	UR20-EM-1315690000-SP 1347280000	UR20-PK-1315690000-SP 1518870000
UR20-4AI-UI-DIF-16-DIAG	1993880000	UR20-BM-SP 1350930000	UR20-EM-1993880000-SP 2446190000	UR20-PK-1993880000-SP 2446200000
UR20-4AI-UI-DIF-32-DIAG	2544660000	UR20-BM-SP 1350930000	UR20-EM-2544660000-SP 2550610000	UR20-PK-2544660000-SP 2550620000
UR20-4AI-UI-ISO-16-DIAG	2566960000	UR20-BM-SP 1350930000	UR20-EM-2566960000-SP 2568360000	UR20-PK-2566960000-SP 2568320000
UR20-4AI-UI-16-HD	1506920000	UR20-BM-SP 1350930000	UR20-EM-1506920000-SP 1515420000	UR20-PK-1506920000-SP 1518830000

Replacement parts for modules

Module	Item No.	Base module Item No.	Electronic unit Item No.	Plug-in unit Item No.
UR20-4AI-UI-16-DIAG-HD	1506910000	UR20-BM-SP 1350930000	UR20-EM-1506910000-SP 1515430000	UR20-PK-1506910000-SP 1518820000
UR20-4AI-UI-12	1394390000	UR20-BM-SP 1350930000	UR20-EM-1394390000-SP 1434230000	UR20-PK-1394390000-SP 1484030000
UR20-8AI-I-16-DIAG	1529370000	UR20-BM-SP 1350930000	UR20-EM-1529370000-SP 3212240000	UR20-PK-1529370000-SP 3212250000
UR20-8AI-I-16-HD	1315650000	UR20-BM-SP 1350930000	UR20-EM-1315650000-SP 1347240000	UR20-PK-1315650000-SP 1559740000
UR20-8AI-I-16-DIAG-HD	1315720000	UR20-BM-SP 1350930000	UR20-EM-1315720000-SP 1347320000	UR20-PK-1315720000-SP 1559750000
UR20-8AI-I-PLC-INT	1315670000	UR20-BM-SP 1350930000	UR20-EM-1315670000-SP 1347250000	UR20-PK-1315670000-SP 1483950000
UR20-4AI-RTD-DIAG	1315700000	UR20-BM-SP 1350930000	UR20-EM-1315700000-SP 1347290000	UR20-PK-1315700000-SP 1484040000
UR20-4AI-RTD-HP-DIAG	2456540000	UR20-BM-SP 1350930000	UR20-EM-2456540000-SP 2545620000	UR20-PK-2456540000-SP 2545610000
UR20-4AI-TC-DIAG	1315710000	UR20-BM-SP 1350930000	UR20-EM-1315710000-SP 1435740000	UR20-PK-1315710000-SP 1484050000
UR20-4AI-TC-CJT-DIAG	3233190000	UR20-BM-SP 1350930000	UR20-EM-3233190000-SP 3239640000	UR20-PK-3233190000-SP
UR20-4AI-R-HS-16-DIAG	2001670000	UR20-BM-SP 1350930000	UR20-EM-2001670000-SP 2068640000	UR20-PK-2001670000-SP 2068610000
UR20-4AI-I-HART-16-DIAG	2617520000	UR20-BM-SP 1350930000	UR20-EM-2617520000-SP 2702570000	UR20-PK-2617520000-SP 2702540000
UR20-4AI-I-HART-ISO-16	2828350000	UR20-BM-SP 1350930000	UR20-EM-2828350000-SP 2935070000	UR20-PK-2828350000-SP 2935060000
UR20-8AI-RTD-DIAG-2W	2555940000	UR20-BM-SP 1350930000	UR20-EM-2555940000-SP 2593310000	UR20-PK-2555940000-SP 2593300000
UR20-15AI-U-16-DIAG	3039320000	UR20-BM-SP 1350930000	UR20-EM-3039320000-SP 3151190000	UR20-PK-3039320000-SP 3151180000
UR20-2AI-SG-24-DIAG	1990070000	UR20-BM-SP 1350930000	UR20-EM-1990070000-SP 1562260000	UR20-PK-1990070000-SP 2068620000
UR20-3EM-230V-AC	2007420000	UR20-BM-SP 1350930000	UR20-EM-2007420000-SP 1562270000	UR20-PK-2007420000-SP 2068630000
UR20-3EM-400V-AC-CT1A	2920830000	UR20-BM-SP 1350930000	UR20-EM-2920830000-SP 3052120000	UR20-PK-2920830000-SP 3052170000
UR20-3EM-400V-AC-CT5A	2920840000	UR20-BM-SP 1350930000	UR20-EM-2920840000-SP 3052130000	UR20-PK-2920840000-SP 3052180000
UR20-3EM-400V-AC-RC	2920850000	UR20-BM-SP 1350930000	UR20-EM-2920850000-SP 3052140000	UR20-PK-2920850000-SP 3052190000
UR20-3EM-400V-AC-333mV	2920860000	UR20-BM-SP 1350930000	UR20-EM-2920860000-SP 3052200000	UR20-PK-2920860000-SP 3052210000
UR20-2AO-UI-16	2705630000	UR20-BM-SP 1350930000	UR20-EM-2705630000-SP 2777420000	UR20-PK-2705630000-SP 2777410000
UR20-2AO-UI-16-DIAG	2566100000	UR20-BM-SP 1350930000	UR20-EM-2566100000-SP 2568380000	UR20-PK-2566100000-SP 2568340000

Replacement parts for modules

Module	Item No.	Base module Item No.	Electronic unit Item No.	Plug-in unit Item No.
UR20-4AO-UI-16	1315680000	UR20-BM-SP 1350930000	UR20-EM-1315680000-SP 1347270000	UR20-PK-1315680000-SP 1484070000
UR20-4AO-UI-16-M	2453880000	UR20-BM-SP 1350930000	UR20-EM-2453880000-SP 2508790000	UR20-PK-2453880000-SP 2508770000
UR20-4AO-UI-16-DIAG	1315730000	UR20-BM-SP 1350930000	UR20-EM-1315730000-SP 1347330000	UR20-PK-1315730000-SP 1518880000
UR20-4AO-UI-16-M-DIAG	2453870000	UR20-BM-SP 1350930000	UR20-EM-2453870000-SP 2508800000	UR20-PK-2453870000-SP 2508780000
UR20-4AO-UI-16-HD	1510690000	UR20-BM-SP 1350930000	UR20-EM-1510690000-SP 1515470000	UR20-PK-1510690000-SP 1531830000
UR20-4AO-UI-16-DIAG-HD	1506930000	UR20-BM-SP 1350930000	UR20-EM-1506930000-SP 1515480000	UR20-PK-1506930000-SP 1531810000
UR20-1CNT-100-1DO	1315570000	UR20-BM-SP 1350930000	UR20-EM-1315570000-SP 1347140000	UR20-PK-1315570000-SP 1346520000
UR20-2CNT-100	1315590000	UR20-BM-SP 1350930000	UR20-EM-1315590000-SP 1347150000	UR20-PK-1315590000-SP 1346540000
UR20-1CNT-500	1315580000	UR20-BM-SP 1350930000	UR20-EM-1315580000-SP 1347170000	UR20-PK-1315580000-SP 1346530000
UR20-2FCNT-100	1508080000	UR20-BM-SP 1350930000	UR20-EM-1508080000-SP 1515440000	UR20-PK-1508080000-SP 1518840000
UR20-1SSI	1508090000	UR20-BM-SP 1350930000	UR20-EM-1508090000-SP 1515490000	UR20-PK-1508090000-SP 1559870000
UR20-1COM-232-485-422	1315750000	UR20-BM-SP 1350930000	UR20-EM-1315750000-SP 1347350000	UR20-PK-1315750000-SP 2425150000
UR20-1COM-232-485-422-V2	2826800000	UR20-BM-SP 1350930000	UR20-EM-2826800000-SP 2826860000	UR20-PK-2826800000-SP 2826870000
UR20-1COM-SAI-PRO	2007430000	UR20-BM-SP 1350930000	UR20-EM-2007430000-SP 2425350000	UR20-PK-2007430000-SP 2425160000
UR20-1COM-SAI-PRO-V2	3116480000	UR20-BM-SP 1350930000	UR20-EM-3116480000-SP 3116960000	UR20-PK-3116480000-SP 3116970000
UR20-1COM-CANOPEN	2489840000	UR20-BM-SP 1350930000	UR20-EM-2489840000-SP 2702550000	UR20-PK-2489840000-SP 2702530000
UR20-1COM-CAN	3040800000	UR20-BM-SP 1350930000	UR20-EM-3040800000-SP	UR20-PK-3040800000-SP
UR20-4COM-IO-LINK	1315740000	UR20-BM-SP 1350930000	UR20-EM-1315740000-SP 1347340000	UR20-PK-1315740000-SP 2508760000
UR20-4COM-IO-LINK-V2	2819690000	UR20-BM-SP 1350930000	UR20-EM-2819690000-SP 2856480000	UR20-PK-2819690000-SP 2856470000
UR20-4DI-4DO-PN-FSOE	1529780000	UR20-BM-SP 1350930000	UR20-EM-1529780000-SP 1993030000	UR20-PK-1529780000-SP 1992960000
UR20-4DI-4DO-PN-FSOE-V2	2464580000	UR20-BM-SP 1350930000	UR20-EM-2464580000-SP 2465140000	UR20-PK-2464580000-SP 2465990000
UR20-8DI-PN-FSOE	1529800000	UR20-BM-SP 1350930000	UR20-EM-1529800000-SP 1993040000	UR20-PK-1529800000-SP 1992970000
UR20-8DI-PN-FSOE-V2	2464600000	UR20-BM-SP 1350930000	UR20-EM-2464600000-SP 2465150000	UR20-PK-2464600000-SP 2465940000

Replacement parts for modules

Module	Item No.	Base module Item No.	Electronic unit Item No.	Plug-in unit Item No.
UR20-4DI-4DO-PN-FSPS	1335060000	UR20-BM-SP 1350930000	UR20-EM-1335060000-SP 1347550000	UR20-PK-1335060000-SP 1992940000
UR20-4DI-4DO-PN-FSPS-V2	2464570000	UR20-BM-SP 1350930000	UR20-EM-2464570000-SP 2465110000	UR20-PK-2464570000-SP 2466000000
UR20-8DI-PN-FSPS	1335070000	UR20-BM-SP 1350930000	UR20-EM-1335070000-SP 1347570000	UR20-PK-1335070000-SP 1992950000
UR20-8DI-PN-FSPS-V2	2464590000	UR20-BM-SP 1350930000	UR20-EM-2464590000-SP 2465130000	UR20-PK-2464590000-SP 2465950000
UR20-4DI-4DO-PN-FSCC	2742570000	UR20-BM-SP 1350930000	UR20-EM-2742570000-SP 2802460000	UR20-PK-2742570000-SP 2781100000
UR20-8DI-PN-FSCC	2742580000	UR20-BM-SP 1350930000	UR20-EM-2742580000-SP 2799990000	UR20-PK-2742580000-SP 2781090000
UR20-PF-O-1DI-SIL	1335030000	UR20-BM-SIL-SP 1350970000	UR20-EM-1335030000-SP 1347520000	UR20-PK-1335030000-SP 1346560000
UR20-PF-O-2DI-SIL	1335050000	UR20-BM-SIL-SP 1350970000	UR20-EM-1335050000-SP 1347540000	UR20-PK-1335050000-SP 1346570000
UR20-PF-O-2DI-DELAY-SIL	1335040000	UR20-BM-SIL-SP 1350970000	UR20-EM-1335040000-SP 1347530000	UR20-PK-1335040000-SP 1484100000
UR20-PF-I	1334710000	UR20-BM-PF-I-SP 1350940000	UR20-EM-1334710000-SP 1347380000	UR20-PK-1334710000-SP 1346460000
UR20-PF-O	1334740000	UR20-BM-PF-O-SP 1350950000	UR20-EM-1334740000-SP 1347420000	UR20-PK-1334740000-SP 1346480000
UR20-16AUX-I	1334770000	UR20-BM-SP 1350930000	UR20-EM-1334770000-SP 1347450000	UR20-PK-1334770000-SP 1346450000
UR20-16AUX-O	1334780000	UR20-BM-SP 1350930000	UR20-EM-1334780000-SP 1347470000	UR20-PK-1334780000-SP 1484080000
UR20-16AUX-FE	1334790000	UR20-BM-SP 1350930000	UR20-EM-1334790000-SP 1347480000	UR20-PK-1334790000-SP 1346490000
UR20-16AUX-GND-I	1334800000	UR20-BM-SP 1350930000	UR20-EM-1334800000-SP 1347490000	UR20-PK-1334800000-SP 1346470000
UR20-16AUX-GND-O	1334810000	UR20-BM-SP 1350930000	UR20-EM-1334810000-SP 1347500000	UR20-PK-1334810000-SP 1484090000
UR20-AUX-VSYS	2919660000	UR20-BM-SP 1350930000	UR20-EM-2919660000-SP 2940640000	UR20-PK-2919660000-SP 2940650000
UR20-ES	1315770000	UR20-BM-SP 1350930000	UR20-EM-1315770000-SP 1347370000	UR20-PK-1315770000-SP 1346510000

Attachment

Overview of module IDs	**A-2**
Decimal ↔ hexadecimal conversion table	**A-4**
Automatic I/O mapping with different engineering tools	**A-5**
Examples of module position coding	**A-6**
Breakdown of serial numbers	**A-8**
Service information	**A-9**

Overview of module IDs

Module	Module ID
Digital input modules	
UR20-4DI-P	00091F84
UR20-4DI-P-3W	001B1F84
UR20-8DI-P-2W	00131FC1
UR20-8DI-P-3W	000A1FC1
UR20-8DI-P-3W-HD	00031FC1
UR20-16DI-P	00049FC2
UR20-16DI-P-PLC-INT	00059FC2
UR20-2DI-P-TS	0F014700
UR20-4DI-P-TS	0F024700
UR20-4DI-N	00011F84
UR20-8DI-N-3W	00021FC1
UR20-16DI-N	000C9FC2
UR20-16DI-N-PLC-INT	000D9FC2
UR20-4DI-2W-230V-AC	00169F84
UR20-8DI-ISO-2W	001C1FC1
Digital output modules	
UR20-4DO-P	01012FA0
UR20-4DO-P-2A	01052FA0
UR20-4DO-PN-2A	01152FC8
UR20-8DO-P	01022FC8
UR20-8DO-P-2W-HD	01192FC8
UR20-16DO-P	0103AFD0
UR20-16DO-P-PLC-INT	0104AFD0
UR20-4DO-N	010A2FA0
UR20-4DO-N-2A	010B2FA0
UR20-8DO-N	010C2FC8
UR20-16DO-N	010DAFD0
UR20-16DO-N-PLC-INT	010EAFD0
UR20-4DO-ISO-4A	011C2FA0
UR20-4RO-SSR-255	01072FA0
UR20-4RO-CO-255	01062FA0
Digital input and output module	
UR20-8DIO-P-3W-DIAG	00223F49
Digital pulse width modulation output modules	
UR20-2PWM-PN-0.5A	09084880
UR20-2PWM-PN-0.5A-V2	090B4880
UR20-2PWM-PN-2A	09094880
UR20-2PWM-PN-2A-V2	090C4880
UR20-2PWM-I-2.5A-2DI-P	090A4880
Stepper motor module	
UR20-1SM-50W-6DI2DO-P	09C34F6D

Module	Module ID
Analogue input modules	
UR20-2AI-UI-16	042215C3
UR20-2AI-UI-16-DIAG	04231543
UR20-4AI-UI-16	040115C4
UR20-4AI-UI-16-DIAG	04021544
UR20-4AI-UI-DIF-16-DIAG	041E1544
UR20-4AI-UI-DIF-32-DIAG	041F1545
UR20-4AI-UI-ISO-16-DIAG	04211544
UR20-4AI-UI-16-HD	041315C4
UR20-4AI-UI-16-DIAG-HD	04141544
UR20-4AI-UI-12	041115C4
UR20-8AI-I-16-DIAG	04241545
UR20-8AI-I-16-HD	040415C5
UR20-8AI-I-16-DIAG-HD	04051545
UR20-8AI-I-PLC-INT	040915C5
UR20-4AI-RTD-DIAG	04061544
UR20-4AI-RTD-HP-DIAG	04081544
UR20-4AI-TC-DIAG	04071544
UR20-4AI-TC-CJT-DIAG	042B1545
UR20-4AI-R-HS-16-DIAG	041C1544
UR20-4AI-I-HART-16-DIAG	0E423F6D
UR20-4AI-I-HART-ISO-16	0E453F6D
UR20-8AI-RTD-DIAG-2W	04201545
UR20-15AI-U-16-DIAG	04297540
UR20-2AI-SG-24-DIAG	041B356D
UR20-3EM-230V-AC	0418356D
UR20-3EM-400V-AC-CT1A	04253566
UR20-3EM-400V-AC-CT5A	04263566
UR20-3EM-400V-AC-RC	04273566
UR20-3EM-400V-AC-333mV	04283566
Analogue output modules	
UR20-2AO-UI-16	050925D8
UR20-2AO-UI-16-DIAG	05082558
UR20-2AO-UI-ISO-16-DIAG	05072558
UR20-4AO-UI-16	050225E0
UR20-4AO-UI-16-M	050625E0
UR20-4AO-UI-16-DIAG	05012560
UR20-4AO-UI-16-M-DIAG	05052560
UR20-4AO-UI-16-HD	050425E0
UR20-4AO-UI-16-DIAG-HD	05032560
Digital counter modules	
UR20-1CNT-100-1DO	08C13800

Module	Module ID
UR20-2CNT-100	08C3380A
UR20-1CNT-500	08C43801
UR20-2FCNT-100	088128EE
Communication modules	
UR20-1SSI	09C17880
UR20-1COM-232-485-422	0E413FED
UR20-1COM-232-485-422-V2	0E44086D
UR20-1COM-SAI-PRO	0BC1E800
UR20-1COM-SAI-PRO-V2	0BC2E800
UR20-1COM-CANOPEN	0F91676D
UR20-1COM-CAN	0FB1676D
UR20-4COM-IO-LINK	0E81276D
UR20-4COM-IO-LINK-V2	0EA1276D
Safe I/O modules	
UR20-4DI-4DO-PN-FSOE	001A7E40
UR20-4DI-4DO-PN-FSOE-V2	001F7E40
UR20-8DI-PN-FSOE	00176E40
UR20-8DI-PN-FSOE-V2	00206E40
UR20-4DI-4DO-PN-FSPS	00113E40
UR20-4DI-4DO-PN-FSPS-V2	001D3E40
UR20-8DI-PN-FSPS	00121E40
UR20-8DI-PN-FSPS-V2	001E1E40
UR20-4DI-4DO-PN-FSCC	00257E40
UR20-8DI-PN-FSCC	00266E40
Safe feed-in modules	
UR20-PF-O-1DI-SIL	18019F43
UR20-PF-O-2DI-SIL	18039F43
UR20-PF-O-2DI-DELAY-SIL	18029F43
Subbus modules SAI Active Universal Pro	
SAI-AU M8 SB 8DI	0A011F41
SAI-AU M12 SB 8DI	0A021F41
SAI-AU M8 SB 8DIO	0A033F49
SAI-AU M12 SB 8DIO	0A043F49
SAI-AU M8 SB 8DO 2A	0B012F48
SAI-AU M12 SB 8DO 2A	0B022F48
SAI-AU M12 SB 4AI	0A411544
SAI-AU M12 SB 4AO	0B412560
SAI-AU M12 SB 4Thermo	0A431544
SAI-AU M12 SB 4PT100	0A421544
SAI-AU M12 SB 2Counter	0B813844

Decimal ↔ hexadecimal conversion table

Conversion decimal ↔ hexadecimal

Decimal	Hexadecimal	Decimal	Hexadecimal	Decimal	Hexadecimal	Decimal	Hexadecimal
001	1	034	22	067	43	100	64
002	2	035	23	068	44	101	65
003	3	036	24	069	45	102	66
004	4	037	25	070	46	103	67
005	5	038	26	071	47	104	68
006	6	039	27	072	48	105	69
007	7	040	28	073	49	106	6A
008	8	041	29	074	4A	107	6B
009	9	042	2A	075	4B	108	6C
010	A	043	2B	076	4C	109	6D
001	B	044	2C	077	4D	110	6E
012	C	045	2D	078	4E	111	6F
013	D	046	2E	079	4F	112	70
014	E	047	2F	080	50	113	71
015	F	048	30	081	51	114	72
016	10	049	31	082	52	115	73
017	11	050	32	083	53	116	74
018	12	051	33	084	54	117	75
019	13	052	34	085	55	118	76
020	14	053	35	086	56	119	77
021	15	054	36	087	57	120	78
022	16	055	37	088	58	121	79
023	17	056	38	089	59	122	7A
024	18	057	39	090	5A	123	7B
025	19	058	3A	091	5B	124	7C
026	1A	059	3B	092	5C	125	7D
027	1B	060	3C	093	5D	126	7E
028	1C	061	3D	094	5E	127	7F
029	1D	062	3E	095	5F	128	80
030	1E	063	3F	096	60	129	81
031	1F	064	40	097	61	130	82
032	20	065	41	098	62	131	83
033	21	066	42	099	63	132	84

Conversion decimal ↔ hexadecimal

Decimal	Hexadecimal	Decimal	Hexadecimal	Decimal	Hexadecimal	Decimal	Hexadecimal
133	85	166	A6	199	C7	232	E8
134	86	167	A7	200	C8	233	E9
135	87	168	A8	201	C9	234	EA
136	88	169	A9	202	CA	235	EB
137	89	170	AA	203	CB	236	EC
138	8A	171	AB	204	CC	237	ED
139	8B	172	AC	205	CD	238	EE
140	8C	173	AD	206	CE	239	EF
141	8D	174	AE	207	CF	240	F0
142	8E	175	AF	208	D0	241	F1
143	8F	176	B0	209	D1	242	F2
144	90	177	B1	210	D2	243	F3
145	91	178	B2	211	D3	244	F4
146	92	179	B3	212	D4	245	F5
147	93	180	B4	213	D5	246	F6
148	94	181	B5	214	D6	247	F7
149	95	182	B6	215	D7	248	F8
150	96	183	B7	216	D8	249	F9
151	97	184	B8	217	D9	250	FA
152	98	185	B9	218	DA	251	FB
153	99	186	BA	219	DB	252	FC
154	9A	187	BB	220	DC	253	FD
155	9B	188	BC	221	DD	254	FE
156	9C	189	BD	222	DE	255	FF
157	9D	190	BE	223	DF	256	100
158	9E	191	BF	224	E0	257	101
159	9F	192	C0	225	E1	258	102
160	A0	193	C1	226	E2	259	103
161	A1	194	C2	227	E3	260	104
162	A2	195	C3	228	E4	261	105
163	A3	196	C4	229	E5	262	106
164	A4	197	C5	230	E6	263	107
165	A5	198	C6	231	E7	264	108

Automatic I/O mapping with different engineering tools

The decimal value 1000000 ($F4240_{hex}$) is to be written into a 32 bit address (double word), e. g. for a UR20-PWM-xx-module output data “Pulse duration”.
“n” is to be the address number the auto-mapping assigns to the 32 bit data object. The enumeration of linked 16 bit (word) and 8 bit (byte) objects differs depending on the engineering tool, as well as the syntax of set values.



When using MODBUS-TCP: Please note that MODBUS generally has a 16 bit data structure. Bytes are not explicitly mapped, therefore the data format rule does not affect the byte order within a word. However, some engineering tools like CODESYS still require the byte address for addressing a bit inside.

UR20-FBC-PB-DP or UR20-FBC-PN-IRT Motorola format (default) with Simatic Manager Step7 5.5

D_n = DW#16#000F4240			
W_{n+2} = W#16#4240		W_n = W#16#000F	
B_{n+3} = B#16#40	B_{n+2} = B#16#42	B_{n+1} = B#16#0F	B_n = B#16#00

UR20-FBC-PB-DP or UR20-FBC-PN-IRT Intel format (parameterised) with Simatic Manager Step7 5.5

D_n = DW#16#40420F00			
W_{n+2} = W#16#0F00		W_n = W#16#4042	
B_{n+3} = B#16#00	B_{n+2} = B#16#0F	B_{n+1} = B#16#42	B_n = B#16#40

UR20-FBC-MOD-TCP Motorola format (default) with CODESYS 3.5

D_n = 16#000F4240			
W_{2n+1} = 16#4240		W_{2n} = 16#000F	
B_{4n+3} = 16#42	B_{4n+2} = 16#40	B_{4n+1} = 16#00	B_{4n} = 16#0F

UR20-FBC-MOD-TCP Intel format (parameterised) with CODESYS 3.5

D_n = 16#40420F00			
W_{2n+1} = 16#0F00		W_{2n} = 16#4042	
B_{4n+3} = 16#0F	B_{4n+2} = 16#00	B_{4n+1} = 16#40	B_{4n} = 16#42

UR20-FBC-EC Intel format (default) with CODESYS 3.5

D_n = 16#000F4240			
W_{2n+1} = 16#000F		W_{2n} = 16#4240	
B_{4n+3} = 16#00	B_{4n+2} = 16#0F	B_{4n+1} = 16#42	B_{4n} = 16#40

UR20-FBC-EC Motorola format (parameterised) with CODESYS 3.5

D_n = 16#40420F00			
W_{2n+1} = 16#4042		W_{2n} = 16#0F00	
B_{4n+3} = 16#40	B_{4n+2} = 16#42	B_{4n+1} = 16#0F	B_{4n} = 16#00

Examples of module position coding

The incorrect insertion of electronic units can be prevented if the base modules are given coding elements KOSM BHZ5.00 (Item No. 1483050000)
Three coding sockets each with four possible positions can be plugged into every base module. This results in a maximum of 4^3 or 64 codes.
It is practical to use either functionally oriented or slot-oriented coding. Example codes are provided for each coding scheme in the following tables.

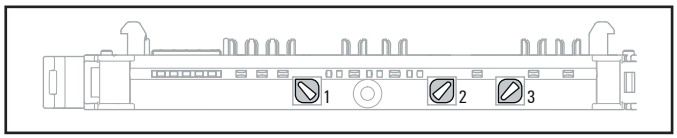

Base module with three coding places and coding sockets plugged (Example code 013)

Possible positions of the coding sockets:

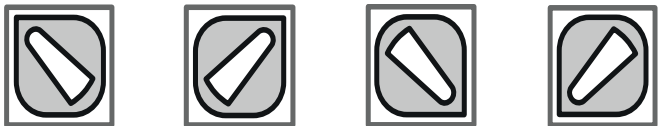

Functionally-oriented coding

	Coding position			
Code	**1**	**2**	**3**	**Meaning**
01	0	0	0	4 digital inputs (4DI)
02	0	0	1	8 digital inputs (8DI)
03	0	0	2	16 digital inputs (16DI)
10	0	2	1	4 digital outputs (4DO)
11	0	2	2	8 digital outputs (8DO)
12	0	2	3	16 digital outputs (16DO)
40	2	1	3	1-channel counter (1CNT)
41	2	2	0	2-channel counter (2CNT)
13	0	3	0	2-channel PWM module (2PWM)
20	1	0	3	4 analogue inputs (4AI)
21	1	1	0	8 analogue inputs (8AI)
30	1	3	1	4 analogue outputs (4AO)
22	1	1	1	4 temperature inputs (4AI-X-DIAG)
50	3	0	1	Power-feed module input (PF-I)
51	3	0	2	Power-feed module output (PF-O)
52	3	0	3	Power-feed module output 1DI-SIL
53	3	1	0	Power-feed module output 2DI-SIL
60	3	2	3	Potential distributor +
61	3	3	0	Potential distributor –
62	3	3	1	Potential distributor FE (16AUX-FE)

Slot-oriented coding

Code	Coding position 1	2	3	Station slot
01	0	0	0	1
02	0	0	1	2
03	0	0	2	3
04	0	0	3	4
05	0	1	0	5
06	0	1	1	6
07	0	1	2	7
08	0	1	3	8
09	0	2	0	9
10	0	2	1	10
11	0	2	2	11
12	0	2	3	12
13	0	3	0	13
14	0	3	1	14
15	0	3	2	15
16	0	3	3	16
17	1	0	0	17
18	1	0	1	18
19	1	0	2	19
20	1	0	3	20
21	1	1	0	21
22	1	1	1	22
23	1	1	2	23
24	1	1	3	24
25	1	2	0	25
26	1	2	1	26
27	1	2	2	27
28	1	2	3	28
29	1	3	0	29
30	1	3	1	30
31	1	3	2	31
32	1	3	3	32

Slot-oriented coding

Code	Coding position 1	2	3	Station slot
33	2	0	0	33
34	2	0	1	34
35	2	0	2	35
36	2	0	3	36
37	2	1	0	37
38	2	1	1	38
39	2	1	2	39
40	2	1	3	40
41	2	2	0	41
42	2	2	1	42
43	2	2	2	43
44	2	2	3	44
45	2	3	0	45
46	2	3	1	46
47	2	3	2	47
48	2	3	3	48
49	3	0	0	49
50	3	0	1	50
51	3	0	2	51
52	3	0	3	52
53	3	1	0	53
54	3	1	1	54
55	3	1	2	55
56	3	1	3	56
57	3	2	0	57
58	3	2	1	58
59	3	2	2	59
60	3	2	3	60
61	3	3	0	61
62	3	3	1	62
63	3	3	2	63
64	3	3	3	64

Breakdown of Serial Numbers

Position	1	2		3		4		5	6	7	8	9	10	11	12	13	14	15
Year	Code		Month	Code	Day	Code	Production plant	Code		Product family code				Serial numbers				
2013	A	N	January	1	1	1		0	0	P	C	7	3	0	0	1	0	1
2014	A	O	February	2	2	2		1	1									
2015	A	P	March	3	3	3		**2**	2									
2016	A	Q	April	4	4	4		3	3									
2017	A	R	May	5	5	5		4	**4**									
2018	**A**	**S**	June	6	6	6		5	5									
2019	A	T	**July**	**7**	7	7		6	6									
2020	A	U	August	8	8	8		7	7									
2021	A	V	September	9	9	9		8	8									
2022	A	W	October	O	10	A		9	9									
2023	A	X	November	N	11	B												
2024	A	Y	December	D	12	C												
2025	A	Z			13	D												
2026	B	A			14	E												
2027	B	B			15	F												
2028	B	C			16	G												
2029	B	D			**17**	**H**												
2030	B	E			18	I												
2031	B	F			19	J												
2032	B	G			20	K												
2033	B	H			21	L												
2034	B	I			22	M												
2035	B	J			23	N												
2036	B	K			24	O												
2037	B	L			25	P												
2038	B	M			26	Q												
2039	B	N			27	R												
2040	B	O			28	S												
2041	B	P			29	T												
2042	B	Q			30	U												
2043	B	R			31	V												
2044	B	S																
...																		
2052	C	A																
2053	C	B																
...																		

Example: AS7H24PC7300101
Date: July 17, 2018
Production plant: Weidmüller plant
Product family: u-remote

Service information

If you have any questions about u-remote, please contact your responsible country representatives.

You can find all Weidmüller addresses and your local contact on the internet at: www.weidmueller.com/countries

Let's connect.

All orders are based on our general terms of delivery, which can be reviewed on the websites of our group companies where you place your order. On demand we can also send the gernal terms of delivery to you.

Weidmüller – Your Partner in Industrial Connectivity

As experienced experts we support our customers and partners around the world with products, solutions and services in the industrial environment of power, signal and data. We are at home in their industries and markets and know the technological challenges of tomorrow. We are therefore continuously developing innovative, sustainable and useful solutions for their individual needs. Together we set standards in Industrial Connectivity.

Weidmüller Interface GmbH & Co. KG
Klingenbergstraße 26
32758 Detmold, Germany
T +49 5231 14-0
F +49 5231 14-292083
www.weidmueller.com

Your local Weidmüller partner can be found on our website:
www.weidmueller.com/countries

1432790000/33/11.2026