REVISIONS				
REV.	DESCRIPTION	DATE	CMPLT. BY	APPRV.
--	--	--	--	

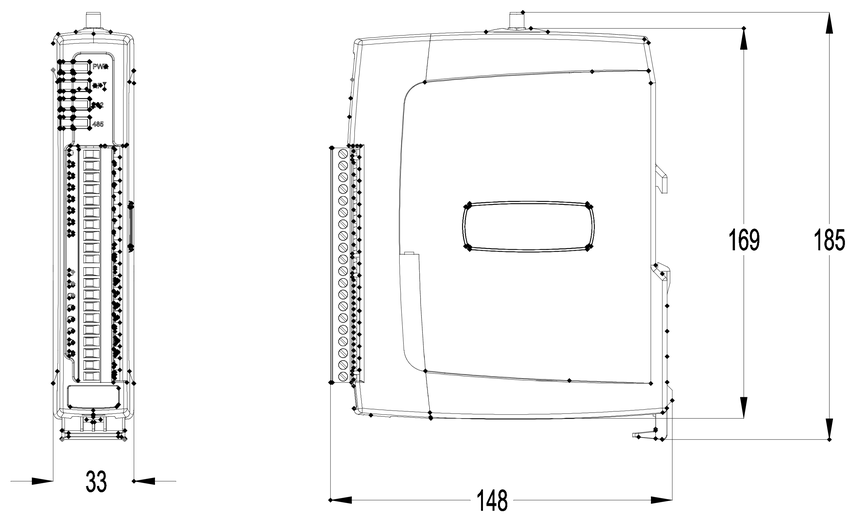

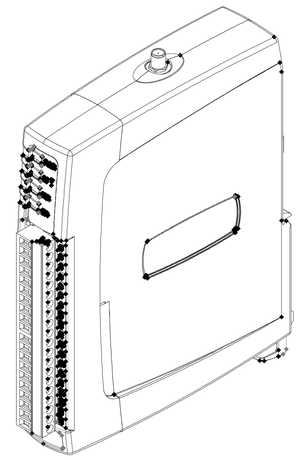

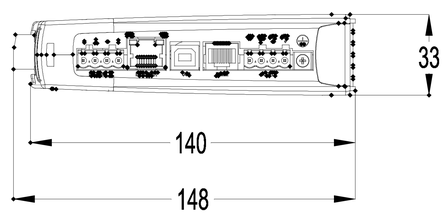

Weidmüller

WEIDMULLER INC.
821 SOUTHLAKE BLVD.
RICHMOND, VIRGINIA 23236

DISTRIBUTION: ■ P/N ■ DWG. ■ PROD. □ INSP. □ OTHER

CAT. NO. 6720005042

DRWN BY IF

APPROVED MSL

REL. DATE 7/27/20

TITLE

WI-I/O-2-E-N-GBL

SCALE: DO NOT SCALE

TOLERANCE ON :

.X = +/- 2.0 mm
.XX = +/- 1.00 mm
.XXX = +/- 0.500 mm
∠ +/- 30'

UNLESS OTHERWISE SPECIFIED ALL DIMENSIONS ARE IN MILLIMETERS

( ) INDICATES REFERENCE DIMENSIONS

SIZE: A SHEET 1 OF 1

PROPRIETARY RIGHTS :

THIS DOCUMENT INCLUDES DESIGN AND ENGINEERING CONCEPTS WHICH INVOLVE PROPRIETARY AND CONFIDENTIAL INFORMATION OF WEIDMULLER INC. AND THIS DOCUMENT OR ITS CONTENTS MAY NOT BE DISCLOSED TO OTHERS, REPRODUCED, COPIED, OR USED WITHOUT WRITTEN AUTHORITY FROM WEIDMULLER INC. IN RICHMOND, VIRGINIA.

DRAWING NUMBER	REV.
0700034	0